JSC-11174

Space Shuttle Systems Handbook

Volume II - Sections 10 through 15

Mission Operations Directorate
Systems Division

Revision E
December 21, 1990

NASA
National Aeronautics and
Space Administration

Lyndon B. Johnson Space Center
Houston, Texas

SPACE SHUTTLE SYSTEMS HANDBOOK

REVISION E

PREFACE

This three-volume book contains systems level drawings for the space shuttle. These drawings were prepared by Flight Controllers for use during space shuttle flight operations. Caution should be exercised when using these systems drawings for other purposes.

Additional copies may be ordered by completing and returning the form on the following page.

Changes to the permanent distribution list may be made by completing and returning the form on the following page.

The symbols and nomenclature used in these drawings are defined and explained in the MOD Drafting Standards, Revision C, PCN-1, January 15, 1989. An asterisk (*) after the drawing number in the table of contents indicates that the drawing is carried onboard during flight operations. In sections 16 and 17, a letter on the drawing number means that the drawing is to be used only for particular vehicles (B = 102, C = 103, D = 104, E = 105).

Prepared by

Pat Bacala
Book Manager, Systems Division
Johnson Space Center, Houston, TX

Approved

Jack Knight
Chief, Systems Division
Johnson Space Center, Houston, TX

JSC-11174

TO: NASA/Johnson Space Center
DF/SSSH Book Manager

Order Form

_____ Send all three volumes of the SSSH, Revision E to the following person as soon as possible.

_____ Change the number of copies sent to someone who is currently on the distribution list. The change will be effective with SSSH, Revision E, DCN-1.

_____ Add this person to the distribution list. The change will be effective with SSSH, Revision E, DCN-1.

_____	_____	_____	_____
Site	Mail code	Title of individual (give title, not name)	Number of copies

Branch Chief's signature: _____

Branch Chief's name (print): _____

Branch Chief's phone number: _____

Branch Chief's mail code: _____

SPACE SHUTTLE SYSTEMS HANDBOOK

REV E

December 21, 1990

TABLE OF CONTENTS

Item	Title	REV/DCN	Signoff date
Volume I - Sections 1 through 9			
SECTION 1 BUS NOMENCLATURE			
Section 1 is reserved.			
SECTION 2 ELECTRICAL POWER DISTRIBUTION			
DWG 2.1* (Sheet 1 of 1)	EPS OVERVIEW	REV E	9/27/90
DWG 2.2 (Sheet 1 of 2)	MAIN BUS DC DISTRIBUTION	REV E	10/11/90
DWG 2.2 (Sheet 2 of 2)	MAIN BUS DC DISTRIBUTION	REV E	9/25/90
DWG 2.3 (Sheet 1 of 1)	AC GENERATION AND DISTRIBUTION	REV E	9/28/90
DWG 2.4 (Sheet 1 of 3)	MCA DISTRIBUTION	REV E	9/20/90
DWG 2.4 (Sheet 2 of 3)	MCA DISTRIBUTION	REV E	9/20/90
DWG 2.4 (Sheet 3 of 3)	MCA DISTRIBUTION	REV E	9/20/90
DWG 2.5 (Sheet 1 of 1)	EDO PALLET EPDC/HEATERS	REV E	10/2/90
TBL 2-I	VENDOR DRAWING REFERENCES	REV E	10/26/90
SECTION 3 ELECTRICAL POWER GENERATION			
DWG 3.1* (Sheet 1 of 2)	FUEL CELL/REACTANT STORAGE OVERVIEW	REV E	10/05/90
DWG 3.1 (Sheet 2 of 2)	PALLET REACTANT STORAGE OVERVIEW	REV E	10/10/90
DWG 3.2* (Sheet 1 of 7)	02 REACTANT STORAGE TANKS 1 & 2	REV E	10/17/90
DWG 3.2* (Sheet 2 of 7)	02 REACTANT STORAGE 4 TANK CONFIG	REV E	10/17/90

Item	Title	REV/DCN	Signoff date
	SECTION 3 ELECTRICAL POWER GENERATION - Concluded		
DWG 3.2* (Sheet 3 of 7)	02 REACTANT STORAGE 3 TANK CONFIG	REV E	10/17/90
DWG 3.2* (Sheet 4 of 7)	02 REACTANT STORAGE 5 TANK CONFIGURATION OV-102	REV E	10/17/90
DWG 3.2 (Sheet 5 of 7)	02 REACTANT STORAGE 5 TANK CONFIGURATION OV-105	REV E	10/17/90
DWG 3.2 (Sheet 6 of 7)	PALLET 02 REACTANT TANKS 6 & 7	REV E	10/11/90
DWG 3.2 (Sheet 7 of 7)	PALLET 02 REACTANT TANKS 8 & 9	REV E	10/11/90
DWG 3.3* (Sheet 1 of 7)	H2 REACTANT STORAGE TANKS 1 & 2	REV E	10/16/90
DWG 3.3* (Sheet 2 of 7)	H2 REACTANT STORAGE 4 TANK CONFIG	REV E	10/16/90
DWG 3.3* (Sheet 3 of 7)	H2 REACTANT STORAGE 3 TANK CONFIGURATION	REV E	10/16/90
DWG 3.3* (Sheet 4 of 7)	H2 REACTANT STORAGE 5 TANK CONFIG OV-102	REV E	10/16/90
DWG 3.3 (Sheet 5 of 7)	H2 REACTANT STORAGE 5 TANK CONFIGURATION OV-105	REV E	10/16/90
DWG 3.3 (Sheet 6 of 7)	PALLET H2 REACTANT TANKS 6 & 7	REV E	10/11/90
DWG 3.3 (Sheet 7 of 7)	PALLET H2 REACTANT TANKS 8 & 9	REV E	10/11/90
DWG 3.4* (Sheet 1 of 2)	FUEL CELL	REV E	10/11/90
DWG 3.4 (Sheet 2 of 2)	FUEL CELL AUTO PURGE AND CELL PERFORMANCE MONITOR	REV E	9/6/90
DWG 3.5 (Sheet 1 of 1)	EDO PALLET	REV E	10/17/90
TBL 3-I	VENDOR DRAWING REFERENCES	REV E	11/1/90
	SECTION 4 LIGHTING		
DWG 4.1 (Sheet 1 of 1)	INTERIOR FLOOD LIGHTING	REV E	10/29/90
DWG 4.2 (Sheet 1 of 2)	INSTRUMENT/NUMERIC/EDGE PANEL LIGHTING	REV E	8/10/87

Item	Title	REV/DCN	Signoff date
	SECTION 4 LIGHTING - Concluded		
DWG 4.2 (Sheet 2 of 2)	INSTRUMENT/NUMERIC/EDGE PANEL LIGHTING	REV E	10/29/90
DWG 4.3 (Sheet 1 of 1)	ANNUNCIATOR LIGHTING	REV E	9/25/90
DWG 4.4 (Sheet 1 of 1)	EXTERIOR LIGHTING	REV E	9/25/90
TBL 4-I	ANNUNCIATOR CONTROL ASSEMBLY CHANNEL ASSIGNMENTS	REV E	10/18/90
TBL 4-II	VENDOR DRAWING REFERENCES	REV E	11/5/90
	SECTION 5 SEQUENTIAL/C&W		
DWG 5.1 (Sheet 1 of 1)	SMOKE DETECTION AND FIRE SUPPRESSION	REV E	10/24/90
DWG 5.2 (Sheet 1 of 2)	CAUTION/WARNING OVERVIEW	REV E	9/6/90
DWG 5.2 (Sheet 2 of 2)	CAUTION/WARNING	REV E	9/6/90
DWG 5.3	(RESERVED)		
DWG 5.4 (Sheet 1 of 1)	SOLID ROCKET BOOSTER RECOVERY	REV E	11/7/90
DWG 5.5 (Sheet 1 of 2)	SRB/ET RANGE SAFETY SYSTEM	REV E	10/15/90
DWG 5.5 (Sheet 2 of 2)	SRB/ET RANGE SAFETY SYSTEM	REV E	10/11/90
TBL 5-I	PRIMARY C/W PARAMETER PROM LIMITS	REV E	10/25/90
TBL 5-II	SCHEDULED PRIMARY C/W PARAMETER INHIBIT AND LIMIT CHANGES	REV E	11/1/90
TBL 5-III	VENDOR DRAWING REFERENCES	REV E	10/29/90
	SECTION 6 LIFE SUPPORT SYSTEM		
DWG 6.1* (Sheet 1 of 2)	PRESSURE CONTROL SYSTEM	REV E	11/21/90
DWG 6.1* (Sheet 2 of 2)	PRESSURE CONTROL SYSTEM	REV E	11/15/90
DWG 6.2* (Sheet 1 of 1)	ATMOSPHERE CIRCULATION	REV E	10/16/90

Item	Title	REV/DCN	Signoff date
	SECTION 6 LIFE SUPPORT SYSTEM - Concluded		
DWG 6.3 (Sheet 1 of 1)	AIRLOCK/ECLSS INTERFACES	REV E	9/25/90
DWG 6.4* (Sheet 1 of 1)	SUPPLY WATER STORAGE	REV E	9/27/90
DWG 6.5* (Sheet 1 of 1)	WASTE MANAGEMENT	REV E	9/21/90
DWG 6.6 (Sheet 1 of 1)	GALLEY	REV E	8/23/90
DWG 6.7 (Sheet 1 of 1)	WATER DISPENSER	REV E	8/23/90
DWG 6.8 (Sheet 1 of 1)	ECLSS INSTRUMENTATION	REV E	8/30/90
DWG 6.9* (Sheet 1 of 1)	EMU INTEGRATED SYSTEM SCHEMATIC	REV E	10/12/90
DWG 6.10 (Sheet 1 of 1)	EMU ELECTRICAL SCHEMATIC	REV E	10/12/90
DWG 6.11 (Sheet 1 of 1)	MMU & FSS PROPULSION SCHEMATIC	REV E	9/27/90
DWG 6.12 (Sheet 1 of 2)	EDO - RCRS (Preliminary)	REV E	N/A
DWG 6.12 (Sheet 2 of 2)	RCRS MECHANICAL (Preliminary)	REV E	N/A
TBL 6-I	VENDOR DRAWING REFERENCES	REV E	11/8/90
	SECTION 7 THERMAL		
DWG 7.1* (Sheet 1 of 2)	ACTIVE THERMAL CONTROL SYSTEM - FREON COOLANT LOOP 1, 2	REV E	9/7/90
DWG 7.1* (Sheet 2 of 2)	ACTIVE THERMAL CONTROL SYSTEM - FREON COOLANT LOOP 1, 2	REV E	9/7/90
DWG 7.2 (Sheet 1 of 1)	PAYLOAD FREON COOLANT LOOPS	TBS	
DWG 7.3* (Sheet 1 of 2)	FLASH EVAPORATOR SUBSYSTEM	REV E	9/21/90
DWG 7.3* (Sheet 2 of 2)	FLASH EVAPORATOR SUBSYSTEM	REV E	9/21/90
DWG 7.4* (Sheet 1 of 1)	ARS H2O COOLANT LOOPS	REV E	8/21/90

Item	Title	REV/DCN	Signoff date
	SECTION 7 THERMAL - Concluded		
DWG 7.5 (Sheet 1 of 1)	THERMAL AFT FUSELAGE	REV E	8/21/90
DWG 7.6 (Sheet 1 of 1)	TCS - INSTRUMENTATION MID FUSELAGE	REV E	8/27/90
DWG 7.7 (Sheet 1 of 1)	TPS/STRUCTURE INSTRUMENTATION	REV E	8/24/90
DWG 7.8 (Sheet 1 of 4)	EXTERNAL SIDE VIEWS	REV E	8/31/90
DWG 7.8 (Sheet 2 of 4)	EXTERNAL VIEWS TOP/BOTTOM	REV E	8/23/90
DWG 7.8 (Sheet 3 of 4)	EXTERNAL PENETRATIONS/TILE (AFT)	REV E	9/21/90
DWG 7.8 (Sheet 4 of 4)	EXTERNAL POST TEMPERATURES	REV E	8/23/90
TBL 7-I	VENDOR DRAWING REFERENCES	REV E	10/26/90
	SECTION 8 DATA PROCESSING		
DWG 8.1 (Sheet 1 of 1)	COMPUTER INPUT/OUTPUT FUNCTION	REV E	8/23/90
DWG 8.2 (Sheet 1 of 1)	BACKUP FLIGHT CONTROLLER	REV E	9/4/90
DWG 8.3 (Sheet 1 of 1)	INPUT/OUTPUT PROCESSOR	REV E	8/23/90
DWG 8.4 (Sheet 1 of 1)	CENTRAL PROCESSING UNIT	REV E	8/23/90
DWG 8.5 (Sheet 1 of 1)	MASS MEMORY	REV E	8/28/90
DWG 8.6 (Sheet 1 of 1)	MULTIFUNCTION CRT DISPLAY SYSTEM	REV E	9/5/90
DWG 8.7* (Sheet 1 of 3)	DPS ELECTRICAL POWER LOSS	REV E	9/4/90
DWG 8.7 (Sheet 2 of 3)	DPS ELECTRICAL POWER LOSS	REV E	8/28/90
DWG 8.7 (Sheet 3 of 3)	DPS ELECTRICAL POWER LOSS	REV E	8/28/90
DWG 8.8 (Sheet 1 of 3)	MULTIPLEXER/DEMULTIPLEXER	REV E	9/4/90

Item	Title	REV/DCN	Signoff date
	SECTION 8 DATA PROCESSING - Concluded		
DWG 8.8 (Sheet 2 of 3)	MULTIPLEXER/DEMULTIPLEXER	REV E	8/24/90
DWG 8.8 (Sheet 3 of 3)	MULTIPLEXER/DEMULTIPLEXER	REV E	9/4/90
DWG 8.9 (Sheet 1 of 1)	MASTER TIMING UNIT	REV E	8/23/90
DWG 8.10 (Sheet 1 of 1)	TIMERS	REV E	8/28/90
DWG 8.11 (Sheet 1 of 2)	PANEL O6 GPC SWITCHES	REV E	8/28/90
DWG 8.11 (Sheet 2 of 2)	PANEL O6 GPC SWITCHES	REV E	9/6/90
DWG 8.12 (Sheet 1 of 2)	GENERAL PURPOSE COMPUTER (I/O FUNCTIONS)	REV E	8/23/90
DWG 8.12 (Sheet 2 of 2)	GENERAL PURPOSE COMPUTER (AP101-S)	REV E	8/28/90
TBL 8-I	VENDOR DRAWING REFERENCES	REV E	9/6/90
	SECTION 9 GN&C		
DWG 9.1 (Sheet 1 of 2)	G&C DEDICATED DISPLAYS	REV E	8/27/90
DWG 9.1 (Sheet 2 of 2)	G&C DEDICATED DISPLAYS	REV E	8/27/90
DWG 9.2 (Sheet 1 of 1)	TACAN	REV E	9/4/90
DWG 9.3 (Sheet 1 of 1)	RADAR ALTIMETER	REV E	9/7/90
DWG 9.4 (Sheet 1 of 1)	MICROWAVE SCANNING BEAM LANDING SYSTEM	REV E	9/4/90
DWG 9.5 (Sheet 1 of 1)	COAS	REV E	9/7/90
DWG 9.6 (Sheet 1 of 2)	STAR TRACKER	REV E	8/27/90
DWG 9.6 (Sheet 2 of 2)	STAR TRACKER	REV E	8/27/90
DWG 9.7 (Sheet 1 of 1)	INERTIAL MEASUREMENT UNIT	REV E	8/29/90

Item	Title	REV/DCN	Signoff date
	SECTION 9 GN&C - Concluded		
DWG 9.8 (Sheet 1 of 1)	RATE GYROS/BODY MOUNTED ACCELEROMETERS	REV E	8/27/90
DWG 9.9 (Sheet 1 of 1)	AIR DATA SYSTEM	REV E	8/27/90
DWG 9.10 (Sheet 1 of 2)	FCS MODE SWITCHES OI 8D AND OI 8F	REV E	9/10/90
DWG 9.10 (Sheet 2 of 2)	FCS MODE SWITCHES OI 20 AND SUBS	REV E	9/12/90
DWG 9.11 (Sheet 1 of 1)	AERO SURFACE SIGNAL FLOW	REV E	8/27/90
DWG 9.12	(RESERVED)		
DWG 9.13 (Sheet 1 of 1)	OMS/TVC SIGNAL FLOW AND DRIVERS	REV E	8/31/90
DWG 9.14 (Sheet 1 of 1)	ME AND SRB TVC ACTUATORS	REV E	9/4/90
DWG 9.15 (Sheet 1 of 1)	ME AND SRB TVC SIGNAL FLOW	REV E	9/7/90
DWG 9.16 (Sheet 1 of 2)	AERO SURFACE ACTUATORS	REV E	9/7/90
DWG 9.16 (Sheet 2 of 2)	AERO SURFACE ACTUATORS	REV E	8/27/90
DWG 9.17 (Sheet 1 of 1)	RHC/SBTC/RPTA/THC	REV E	9/4/90
DWG 9.18	(RESERVED)		
DWG 9.19	(RESERVED)		
DWG 9.20 (Sheet 1 of 1)	HEAD UP DISPLAY	REV E	9/7/90

Volume II - Sections 10 through 15

SECTION 10 MAIN PROPULSION

DWG 10.1 (Sheet 1 of 4)	MEC COMMAND TABLE TABLE 10.I	REV E	9/7/90
DWG 10.1 (Sheet 2 of 4)	MASTER EVENTS CONTROLLER OVERVIEW	REV E	9/7/90
DWG 10.1 (Sheet 3 of 4)	MASTER EVENTS CONTROLLER	REV E	9/7/90

Item	Title	REV/DCN	Signoff date
	SECTION 10 MAIN PROPULSION - Concluded		
DWG 10.1 (Sheet 4 of 4)	MASTER EVENTS CONTROLLER	REV E	9/7/90
DWG 10.2 (Sheet 1 of 2)	SOLID ROCKET BOOSTER 1	REV E	9/11/90
DWG 10.2 (Sheet 2 of 2)	SOLID ROCKET BOOSTER 2	REV E	9/11/90
DWG 10.3 (Sheet 1 of 1)	ORBITER/ENGINE INTERFACE UNIT	REV E	9/11/90
DWG 10.4 (Sheet 1 of 1)	MAIN ENGINE BLOCK I CONTROLLER	REV E	9/7/90
DWG 10.5 (Sheet 1 of 1)	MAIN ENGINE BLOCK I CONTROLLER INTERFACE ELECTRONICS	REV E	9/11/90
DWG 10.6 (Sheet 1 of 1)	MAIN ENGINE BLOCK I INPUT ELECTRONICS	REV E	9/7/90
DWG 10.7 (Sheet 1 of 1)	MAIN ENGINE BLOCK I OUTPUT ELECTRONICS	REV E	9/11/90
DWG 10.8 (Sheet 1 of 1)	MPS HELIUM SUPPLY	REV E	9/7/90
DWG 10.9 (Sheet 1 of 1)	MAIN ENGINE HYDRAULICS AND PNEUMATICS	REV E	9/7/90
DWG 10.10 (Sheet 1 of 1)	EXTERNAL TANK	REV E	9/7/90
DWG 10.11 (Sheet 1 of 1)	MAIN ENGINE LO_2 SYSTEM	REV E	9/11/90
DWG 10.12 (Sheet 1 of 1)	MAIN ENGINE LH_2 SYSTEM	REV E	9/11/90
DWG 10.13 (Sheet 1 of 1)	MAIN ENGINE	REV E	9/11/90
DWG 10.14 (Sheet 1 of 1)	FLIGHT ACCELEROMETER SAFETY CUTOFF SYSTEM	REV E	9/11/90
DWG 10.15 (Sheet 1 of 1)	LO2 AND LH2 17-INCH DISCONNECT LATCH	REV E	9/11/90
TBL 10-I	(RESERVED)		
TBL 10-II	VENDOR DRAWING REFERENCES	REV E	9/6/90
	SECTION 11 OMS/RCS PROPULSION		
DWG 11.1* (Sheet 1 of 2)	OMS/RCS INTERCONNECT LEFT POD	REV E	9/4/90

Item	Title	REV/DCN	Signoff date
	SECTION 11 OMS/RCS PROPULSION - Concluded		
DWG 11.1* (Sheet 2 of 2)	OMS/RCS INTERCONNECT RIGHT POD	REV E	9/4/90
DWG 11.2 (Sheet 1 of 1)	OMS GAGING	REV E	9/10/90
DWG 11.3* (Sheet 1 of 2)	OMS/DRIVERS	REV E	9/4/90
DWG 11.3* (Sheet 2 of 2)	ORBITAL MANEUVERING SYSTEM	REV E	9/4/90
DWG 11.4* (Sheet 1 of 1)	AFT RCS/OMS INTERCONNECT	REV E	9/10/90
DWG 11.5* (Sheet 1 of 2)	AFT RCS MODULE	REV E	9/10/90
DWG 11.5* (Sheet 2 of 2)	AFT RCS MODULE	REV E	9/10/90
DWG 11.6 (Sheet 1 of 2)	FWD RCS MODULE	REV E	9/5/90
DWG 11.6* (Sheet 2 of 2)	FWD RCS MODULE	REV E	9/5/90
DWG 11.7 (Sheet 1 of 1)	HEATER CONTROL SYS FWD RCS	REV E	9/10/90
DWG 11.8 (Sheet 1 of 2)	HEATER CONTROL SYS OMS POD	REV E	9/12/90
DWG 11.8 (Sheet 2 of 2)	HEATER CONTROL SYS OMS POD	REV E	9/10/90
DWG 11.9 (Sheet 1 of 1)	HEATER CONTROL SYS AFT OMS/RCS CROSSFEED	REV E	9/10/90
DWG 11.10 (Sheet 1 of 3)	RCS SIGNAL FLOW AND DRIVERS	REV E	9/4/90
DWG 11.10 (Sheet 2 of 3)	RCS SIGNAL FLOW AND DRIVERS	REV E	9/4/90
DWG 11.10 (Sheet 3 of 3)	RCS SIGNAL FLOW AND DRIVERS	REV E	9/11/90
DWG 11.11 (Sheet 1 of 2)	ORBITAL REFUELING SYSTEM	REV E	9/4/90
DWG 11.11 (Sheet 2 of 2)	ORBITAL REFUELING SYSTEM	REV E	9/4/90
TBL 11-I	VENDOR DRAWING REFERENCES	REV E	9/11/90

Item	Title	REV/DCN	Signoff date
	SECTION 12 APU/HYDRAULICS SYSTEMS		
DWG 12.1* (Sheet 1 of 2)	AUXILIARY POWER UNIT (APU)	REV E	8/27/90
DWG 12.1* (Sheet 2 of 2)	AUXILIARY POWER UNIT (APU)	REV E	11/16/90
DWG 12.2 (Sheet 1 of 2)	HYDRAULIC/APU LINE SCHEMATIC	REV E	9/17/90
DWG 12.2 (Sheet 2 of 2)	HYDRAULIC LINE SCHEMATIC	REV E	9/21/90
DWG 12.3* (Sheet 1 of 4)	HYDRAULIC POWER SYSTEM OI 8D, OI 8F, OI 20	REV E	11/8/90
DWG 12.3* (Sheet 2 of 4)	HYDRAULIC POWER SYSTEM OI 21	REV E	11/8/90
DWG 12.3* (Sheet 3 of 4)	HYDRAULIC POWER SYSTEM	REV E	10/31/90
DEG 12.3 (Sheet 4 of 4)	HYDRAULIC POWER SYSTEM	REV E	10/4/90
DWG 12.4* (Sheet 1 of 1)	APU/HYD WATER SPRAY BOILER	REV E	11/6/90
TBL 12-I	VENDOR DRAWING REFERENCES	REV E	11/19/90
	SECTION 13 LANDING GEAR		
DWG 13.1 (Sheet 1 of 3)	LANDING GEAR	REV E	8/27/90
DWG 13.1 (Sheet 2 of 3)	LANDING GEAR OI 8D, OI 8F, OI 20	REV E	11/19/90
DEG 13.1 (Sheet 3 of 3)	LANDING GEAR OI 21 (Preliminary)	REV E	N/A
DWG 13.2 (Sheet 1 of 2)	BRAKES	REV E	10/15/90
DEG 13.2 (Sheet 2 of 2)	BRAKES/REDUNDANT WOW OI 21 (Preliminary)	REV E	N/A
DWG 13.3 (Sheet 1 of 2)	NOSE WHEEL STEERING OI 8D AND OI 8F	REV E	11/16/90
DWG 13.3 (Sheet 2 of 2)	NWS OI 20	REV E	11/6/90
TBL 13-I	VENDOR DRAWING REFERENCES	REV E	11/16/90

Item	Title	REV/DCN	Signoff date
	SECTION 14 PAYLOAD BAY		
DWG 14.1* (Sheet 1 of 3)	PAYLOAD BAY DOORS/ RADIATOR OVERVIEW	REV E	10/23/90
DWG 14.1* (Sheet 2 of 3)	PL BAY DOOR LATCH CLEAR TO OPEN/CLOSE INDICATIONS	REV E	10/23/90
DWG 14.1* (Sheet 3 of 3)	RADIATORS DEPLOY/STOW	REV E	10/23/90
DWG 14.2* (Sheet 1 of 2)	PLBD OPEN/CLOSE H/W OVERVIEW	REV E	11/2/90
DWG 14.2* (Sheet 2 of 2)	PLBD SOFTWARE OVERVIEW (PASS AND BFS)	REV E	10/26/90
DWG 14.3 (Sheet 1 of 3)	PAYLOAD RETENTION LATCH ELECTRICAL	REV E	10/23/90
DWG 14.3 (Sheet 2 of 3)	PAYLOAD RETENTION LATCH-MECH	REV E	10/2/90
DWG 14.3 (Sheet 3 of 3)	PROTECTIVE COVER REMOVAL SYSTEM	REV E	10/12/90
DWG 14.4 (Sheet 1 of 8)	RMS D&C PANEL	REV E	9/19/90
DWG 14.4 (Sheet 2 of 8)	RMS MCIU	REV E	8/31/90
DWG 14.4 (Sheet 3 of 8)	RMS CONTROL SYSTEM (SPA AND MOTOR CONTROL)	REV E	9/19/90
DWG 14.4 (Sheet 4 of 8)	RMS CONTROL SYSTEM (BDA)	REV E	8/24/90
DWG 14.4 (Sheet 5 of 8)	RMS CONTROL SYSTEM (EEEU AND MOTOR CONTROL)	REV E	8/29/90
DWG 14.4 (Sheet 6 of 8)	RMS THERMOSTAT/HEATER ELEMENTS	REV E	8/31/90
DWG 14.4* (Sheet 7 of 8)	RMS MECHANICAL SYSTEM OVERVIEW	REV E	10/4/90
DWG 14.4* (Sheet 8 of 8)	RMS ELECTRICAL SYSTEM OVERVIEW	REV E	9/19/90
DWG 14.5 (Sheet 1 of 2)	RMS/SOFTWARE OVERVIEW	REV E	10/19/90

Item	Title	REV/DCN	Signoff date
	SECTION 14 PAYLOAD BAY - Concluded		
DWG 14.5 (Sheet 2 of 2)	RMS/SOFTWARE OVERVIEW	REV E	10/19/90
DWG 14.6 (Sheet 1 of 3)	PORT MANIPULATOR POSITIONING MECHANISM-MANIPULATOR RETENTION LATCHES ELECTRICAL	REV E	8/31/90
DWG 14.6 (Sheet 2 of 3)	PORT MANIPULATOR POSITIONING MECHANISM-MANIPULATOR RETENTION LATCHES MECHANICAL	REV E	8/31/90
DWG 14.6 (Sheet 3 of 3)	PORT RMS JETTISON ELECTRICAL	REV E	9/19/90
DWG 14.7 (Sheet 1 of 2)	FLIGHT RELEASABLE GRAPPLE FIXTURE	REV E	8/29/90
DWG 14.7 (Sheet 2 of 2)	RIGIDIZE SENSING GRAPPLE FIXTURE	REV E	8/29/90
DWG 14.8 (Sheet 1 of 3)	MCIU FIRMWARE OVERVIEW	REV E	9/7/90
DWG 14.8 (Sheet 2 of 3)	MCIU FIRMWARE SYNCIR ROUTINE	REV E	9/7/90
DWG 14.8 (Sheet 3 of 3)	MCIU FIRMWARE MEMORY MAP	REV E	9/7/90
DWG 14.9 (Sheet 1 of 5)	SPDS Y_o ELECTRICAL	REV E	8/31/90
DWG 14.9 (Sheet 2 of 5)	SPDS RDU ELECTRICAL	REV E	8/31/90
DWG 14.9 (Sheet 3 of 5)	SPDS PAYLOAD RELEASE SYSTEM AND PEDESTAL DRIVE TRANSFER SYSTEM	REV E	9/10/90
DWG 14.9 (Sheet 4 of 5)	STABILIZED PAYLOAD DEPLOYMENT SYSTEM MECHANICAL OVERVIEW	REV E	9/10/90
DWG 14.9 (Sheet 5 of 5)	STABILIZED PAYLOAD DEPLOYMENT SYSTEM MECHANICAL OVERVIEW	REV E	9/10/90
DWG 14.10 (Sheet 1 of 1)	NEW RMS MCIU (-5 MCIU)	REV E	11/27/90
DWG 14.11 (Sheet 1 of 4)	NEW MCIU FIRMWARE OVERVIEW	REV E	11/27/90

Item	Title	REV/DCN	Signoff date
	SECTION 14 PAYLOAD BAY - Concluded		
DWG 14.11 (Sheet 2 of 4)	NEW MCIU DETAILED FIRMWARE	REV E	11/27/90
DWG 14.11 (Sheet 3 of 4)	NEW MCIU DETAILED FIRMWARE	REV E	11/27/90
DWG 14.11 (Sheet 4 of 4)	NEW MCIU FIRMWARE MEMORY MAP	REV E	11/27/90
DWG 14.12 (Sheet 1 of 3)	ROEU ELECTRICAL	REV E	11/27/90
DWG 14.12 (Sheet 2 of 3)	REMOTELY OPERATED ELECTRICAL UMBILICAL MECHANICAL OVERVIEW	REV E	11/27/90
DWG 14.12 (Sheet 3 of 3)	ROEU MECHANICAL	REV E	11/27/90
TBL 14-I	VENDOR DRAWING REFERENCES	REV E	10/23/90
	SECTION 15 MECHANICAL SUPPORT SYSTEMS		
DWG 15.1 (Sheet 1 of 4)	ACTIVE VENT SYSTEM VENT 1 AND 2	REV E	8/24/90
DWG 15.1 (Sheet 2 of 4)	ACTIVE VENT SYSTEM VENTS 3, 4, 5 & 7	REV E	8/24/90
DWG 15.1 (Sheet 3 of 4)	ACTIVE VENT SYSTEM VENTS 6, 8, AND 9	REV E	8/24/90
DWG 15.1 (Sheet 4 of 4)	VENT DOOR SOFTWARE	REV E	9/5/90
DWG 15.2* (Sheet 1 of 4)	ORBITER/ET UMBILICAL CLOSEOUT DOORS	REV E	8/20/90
DWG 15.2* (Sheet 2 of 4)	ORB/ET UMBILICAL CLOSEOUT DOORS (ELECT)	REV E	5/4/90
DWG 15.2 (Sheet 3 of 4)	ET DOOR SOFTWARE PASS AND BFS OI8D AND OI8F	REV E	8/24/90
DWG 15.2 (Sheet 4 of 4)	ET DOOR SOFTWARE PASS AND BFS OI20	REV E	8/23/90
DWG 15.3 (Sheet 1 of 3)	ORBITER ET SEPARATION MECHANICAL	REV E	8/28/90

Item	Title	REV/DCN	Signoff date
	SECTION 15 MECHANICAL SUPPORT SYSTEMS - Concluded		
DWG 15.3 (Sheet 2 of 3)	ORBITER ET SEPARATION MECHANICAL	REV E	9/5/90
DWG 15.3 (Sheet 3 of 3)	ORBITER ET SEPARATION MECHANICAL	REV E	8/28/90
DWG 15.4	(RESERVED)		
DWG 15.5 (Sheet 1 of 2)	HATCHES (SIDE)	REV E	8/9/90
DWG 15.5 (Sheet 2 of 2)	HATCHES (AIRLOCK AND SPACELAB)	REV E	10/24/90
DWG 15.6 (Sheet 1 of 2)	CREW SEATS	REV E	10/25/90
DWG 15.6 (Sheet 2 of 2)	CREW SEATS MECHANICAL/ELECTRICAL	REV E	10/25/90
DWG 15.7* (Sheet 1 of 2)	KU-BAND ANTENNA DEPLOY/STOW/ JETTISON	REV E	10/29/90
DWG 15.7* (Sheet 2 of 2)	KU-BAND MECHANICAL	REV E	10/26/90
DWG 15.8 (Sheet 1 of 2)	MECHANICAL/SOFTWARE OVERVIEW (PASS ONLY) OI8D AND OI8F	REV E	9/17/90
DWG 15.8 (Sheet 2 of 2)	MECHANICAL/SOFTWARE OVERVIEW (PASS ONLY) OI8D AND OI8F	REV E	11/5/90
TBL 15-I	VENDOR DRAWING REFERENCES	REV E	11/5/90
	Volume III - Sections 16 through 20		
	SECTION 16 COMMUNICATIONS SYSTEMS		
DWG 16.1* (Sheet 1 of 6)	COMM OVERVIEW S-BAND	REV E	10/29/90
DWG 16.1B* (Sheet 2 of 6)	COMM OVERVIEW AUDIO	REV E	9/12/90
DWG 16.1C,D* (Sheet 3 of 6)	COMM OVERVIEW AUDIO	REV E	10/17/90
DWG 16.1* (Sheet 4 of 6)	COMM OVERVIEW KU BAND	REV E	10/23/90
DWG 16.1 (Sheet 5 of 6)	COMM OVERVIEW CCTV	REV E	10/18/90

Item	Title	REV/DCN	Signoff date
	SECTION 16 COMMUNICATIONS SYSTEMS - Continued		
DWG 16.1 (Sheet 6 of 6)	PAYLOAD SYSTEM OVERVIEW	REV E	10/23/90
DWG 16.2 (Sheet 1 of 3)	S-BAND PM TRANSPONDER	REV E	8/21/90
DWG 16.2 (Sheet 2 of 3)	S-BAND PM AMPLIFIER SYSTEM	REV E	8/21/90
DWG 16.2 (Sheet 3 of 3)	S-BAND PM/FM SWITCH BEAM ANTENNA SYSTEM	REV E	8/21/90
DWG 16.3 (Sheet 1 of 3)	NETWORK SIGNAL PROCESSOR RETURN LINK	REV E	10/16/90
DWG 16.3 (Sheet 2 of 3)	NETWORK SIGNAL PROCESSOR FORWARD LINK	REV E	11/2/90
DWG 16.3 (Sheet 3 of 3)	COMSEC 1/2	REV E	11/5/90
DWG 16.4 (Sheet 1 of 2)	TEXT AND GRAPHICS SYSTEM	REV E	9/12/90
DWG 16.4 (Sheet 2 of 2)	SECURE TEXT & GRAPHICS SYSTEM TELEVISION INTERFACES	REV E	9/12/90
DWG 16.5 (Sheet 1 of 2)	KU-BAND SYSTEM	REV E	10/10/90
DWG 16.5 (Sheet 2 of 2)	KU-BAND SYSTEM	REV E	10/10/90
DWG 16.6 (Sheet 1 of 1)	TELEPRINTER	REV E	10/23/90
DWG 16.7B (Sheet 1 of 1)	ORBITER EXPERIMENTS SUPPORT SYSTEM FOR OEX	REV E	10/18/90
DWG 16.8 (Sheet 1 of 1)	S-BAND FM SYSTEM	REV E	10/10/90
DWG 16.9 (Sheet 1 of 2)	UHF ORBITER TRANSCEIVER	REV E	10/23/90
DWG 16.9 (Sheet 2 of 2)	OPERATIONAL UHF EVC BACKPACK TRANSCEIVER	REV E	11/26/90
DWG 16.10 (Sheet 1 of 7)	AUDIO PANEL/ATU PLT, CDR	REV E	9/12/90
DWG 16.10 (Sheet 2 of 7)	AUDIO PANEL/ATU MS, PS, AND OS SMU	REV E	10/23/90
DWG 16.10C,D,E (Sheet 3 of 7)	AUDIO PANEL/ATU MID DECK SMU AND CCU	REV E	11/26/90

Item	Title	REV/DCN	Signoff date
	SECTION 16 COMMUNICATIONS SYSTEMS - Continued		
DWG 16.10 (Sheet 4 of 7)	AUDIO PANEL/ATU AIRLOCK	REV E	9/12/90
DWG 16.10B (Sheet 5 of 7)	AUDIO PANEL/ATU AIRLOCK 1 BACKUP	REV E	11/5/90
DWG 16.10B (Sheet 6 of 7)	AUDIO PANEL/ATU MID DECK AUDIO/ AIRLOCK 2 BACKUP	REV E	9/12/90
DWG 16.10B (Sheet 7 of 7)	AUDIO PANEL/ATU OS AND OS SMU	REV E	9/12/90
DWG 16.11 (Sheet 1 of 2)	AUDIO/ACCU	REV E	11/26/90
DWG 16.11 (Sheet 2 of 2)	AUDIO/ACCU	REV E	10/26/90
DWG 16.12 (Sheet 1 of 1)	TV CONTROL	REV E	10/26/90
DWG 16.13 (Sheet 1 of 4)	TV/CAMERA MONITOR	REV E	10/2/90
DWG 16.13 (Sheet 2 of 4)	TV/CAMERA MONITOR	REV E	10/2/90
DWG 16.13 (Sheet 3 of 4)	TV/EMU	REV E	10/2/90
DWG 16.13 (Sheet 4 of 4)	AIRBORNE DIGITIZER UNIT SECURE TELEVISION SYSTEM	REV E	10/2/90
DWG 16.14 (Sheet 1 of 2)	S-BAND PAYLOAD INTERROGATOR	REV E	10/26/90
DWG 16.14 (Sheet 2 of 2)	S-BAND PAYLOAD INTERROGATOR	REV E	10/26/90
DWG 16.15 (Sheet 1 of 1)	PAYLOAD SIGNAL PROCESSOR	REV E	10/23/90
DWG 16.16 (Sheet 1 of 1)	SRB DFI FLIGHT RECORDER	REV E	9/12/90
DWG 16.17 (Sheet 1 of 1)	GROUND COMMAND INTERFACE LOGIC (GCIL) CONTROLLER	REV E	9/12/90
DWG 16.18 (Sheet 1 of 1)	OPS RECORDERS	REV E	10/23/90
DWG 16.19 (Sheet 1 of 1)	P/L RECORDER	REV E	10/23/90
DWG 16.20 (Sheet 1 of 2)	WIRELESS CREW COMM SYS AUDIO INTERFACE UNIT	REV E	10/2/90

Item	Title	REV/DCN	Signoff date
	SECTION 16 COMMUNICATIONS SYSTEMS - Concluded		
DWG 16.20 (Sheet 2 of 2)	WIRELESS CREW COMM SYS CREW REMOTE UNIT	REV E	10/16/90
DWG 16.21	(RESERVED)		
DWG 16.22 (Sheet 1 of 3)	COMMUNICATIONS INTERFACE EQUIPMENT (CONTROL)	REV E	10/26/90
DWG 16.22 (Sheet 2 of 3)	COMMUNICATIONS INTERFACE EQUIPMENT (COMMAND)	REV E	10/23/90
DWG 16.22 (Sheet 3 of 3)	COMMUNICATIONS INTERFACE EQUIPMENT (TELEMETRY)	REV E	10/26/90
DWG 16.23	(RESERVED)		
DWG 16.24 (Sheet 1 of 1)	INTERIM VIDEO TAPE RECORDER	REV E	10/26/90
DWG 16.25 (Sheet 1 of 1)	COMM SYSTEM POWER DISTRIBUTION	REV E	10/2/90
DWG 16.26 (Sheet 1 of 1)	COMM MDM I/F	REV E	10/23/90
TBL 16-I	VENDOR DRAWING REFERENCES	REV E	11/21/90
	SECTION 17 INSTRUMENTATION		
DWG 17.1 (Sheet 1 of 3)	OPERATIONAL INSTRUMENTATION DSC'S AND MDM'S	REV E	10/23/90
DWG 17.1 (Sheet 2 of 3)	OI DEDICATED SIGNAL CONDITIONERS	REV E	10/23/90
DWG 17.1 (Sheet 3 of 3)	OI INST MDM	REV E	10/23/90
DWG 17.2 (Sheet 1 of 1)	OI PCM MASTER UNIT	REV E	10/10/90
DWG 17.3 (Sheet 1 of 3)	PAYLOAD DATA INTERLEAVER	REV E	10/2/90
DWG 17.3 (Sheet 2 of 3)	PAYLOAD DATA INTERLEAVER	REV E	10/23/90
DWG 17.3 (Sheet 3 of 3)	PAYLOAD DATA INTERLEAVER	REV E	10/2/90
DWG 17.4	(RESERVED)		
DWG 17.5	(RESERVED)		
DWG 17.6	(RESERVED)		

Item	Title	REV/DCN	Signoff date
	SECTION 17 INSTRUMENTATION - Concluded		
DWG 17.7	(RESERVED)		
DWG 17.8	(RESERVED)		
DWG 17.9	(RESERVED)		
DWG 17.10 (Sheet 1 of 1)	BIO MEDICAL INSTRUMENTATION	REV E	10/10/90
DWG 17.11 (Sheet 1 of 1)	MADS EQUIP	REV E	10/10/90
DWG 17.12C,D (Sheet 1 of 1)	MODULE AUXILIARY DATA SYSTEM RECORDER/CONTROLLER SUBSYSTEM	REV E	10/2/90
TBL 17-I	VENDOR DRAWING REFERENCES	REV E	11/2/90
	SECTION 18 ESCAPE SYSTEM		
DWG 18.1* (Sheet 1 of 1)	ESCAPE PANEL	REV E	9/13/90
DWG 18.2 (Sheet 1 of 1)	POLE CREW ESCAPE SYSTEM	REV E	9/28/90
DWG 18.3 (Sheet 1 of 1)	EMERGENCY EGRESS SLIDE/SKYGENIE	REV E	10/15/90
DWG 18.4 (Sheet 1 of 1)	LAUNCH AND ENTRY SUIT/HELMET RETENTION ASSEMBLY	REV E	9/13/90
DWG 18.5 (Sheet 1 of 3)	SURVIVAL GEAR	REV E	9/13/90
DWG 18.5 (Sheet 2 of 3)	SURVIVAL GEAR	REV E	9/13/90
DWG 18.5 (Sheet 3 of 3)	SURVIVAL GEAR	REV E	9/13/90
DWG 18.6 (Sheet 1 of 1)	PERSONAL PARCHUTE ASSEMBLY (PPA)	REV E	11/6/90
TBL 18-I	VENDOR DRAWING REFERENCES	REV E	9/13/90
	SECTION 19 STRUCTURES		
DWG 19.1 (Sheet 1 of 6)	PAYLOAD BAY OVERVIEW 1307 BULKHEAD LOOKING AFT	REV E	9/7/90
DWG 19.1 (Sheet 2 of 6)	PAYLOAD BAY OVERVIEW 582/576 BULKHEAD LOOKING AFT	REV E	9/7/90

Item	Title	REV/DCN	Signoff date
	SECTION 19 STRUCTURES - Concluded		
DWG 19.1* (Sheet 3 of 6)	STRUCTURES AND SYSTEMS LOCATION	REV E	9/26/90
DWG 19.1* (Sheet 4 of 6)	STRUCTURES AND SYSTEMS LOCATIONS	REV E	10/17/90
DWG 19.1* (Sheet 5 of 6)	STRUCTURES AND SYSTEMS LOCATIONS	REV E	10/3/90
DWG 19.1* (Sheet 6 of 6)	STRUCTURES AND SYSTEMS LOCATIONS	REV E	9/7/90
DWG 19.2 (Sheet 1 of 1)	SRB/ET CONFIGURATION	REV E	8/24/90
DWG 19.3 (Sheet 1 of 3)	PAYLOAD BAY OVERVIEW (LOOKING INBOARD AND DOWN)	REV E	9/6/90
DWG 19.3 (Sheet 2 of 3)	PAYLOAD BAY OVERVIEW PORT SIDE	REV E	9/6/90
DWG 19.3 (Sheet 3 of 3)	PAYLOAD BAY OVERVIEW STARBOARD SIDE	REV E	9/6/90
DWG 19.4* (Sheet 1 of 3)	EXTERNAL SIDE VIEWS	REV E	9/6/90
DWG 19.4* (Sheet 2 of 3)	EXTERNAL VIEWS TOP/BOTTOM	REV E	9/6/90
DWG 19.4* (Sheet 3 of 3)	EXTERNAL PENETRATIONS/ TILE (AFT)	REV E	9/6/90
	SECTION 20 DISPLAYS AND CONTROLS		
DWG 20.1 (Sheet 1 of 4)	DISPLAYS AND CONTROLS FORWARD STATIONS	REV E	10/9/90
DWG 20.1 (Sheet 2 of 4)	DISPLAYS AND CONTROLS FORWARD STATIONS	REV E	10/19/90
DWG 20.1 (Sheet 3 of 4)	DISPLAYS AND CONTROLS FORWARD STATIONS	REV E	10/9/90
DWG 20.1 (Sheet 4 of 4)	DISPLAYS AND CONTROLS FORWARD STATIONS	REV E	10/9/90
DWG 20.2 (Sheet 1 of 3)	DISPLAYS AND CONTROLS AFT STATIONS	REV E	10/12/90
DWG 20.2 (Sheet 2 of 3)	DISPLAYS AND CONTROLS AFT STATIONS AND MISSION UNIQUE PANELS	REV E	10/18/90

Item	Title	REV/DCN	Signoff date
	SECTION 20 DISPLAYS AND CONTROLS - Concluded		
DWG 20.2 (Sheet 3 of 3)	DISPLAYS AND CONTROLS AFT STATIONS	REV E	10/12/90
DWG 20.3 (Sheet 1 of 1)	DISPLAYS AND CONTROLS MID DECK STATIONS	REV E	10/17/90
DWG 20.4 (Sheet 1 of 1)	DISPLAYS AND CONTROLS AIRLOCK	REV E	10/9/90
TBL 20-I	VENDOR DRAWING REFERENCES	REV E	11/5/90

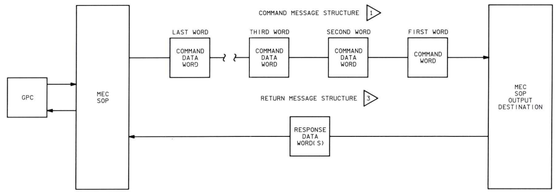

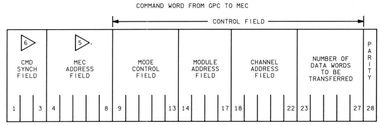





S = POWER TRANSIENT FLAG, SET TO LOGICAL '1'
E = ERROR FLAG, SET TO LOGICAL '0'
V = VALIDITY FLAG, SET TO LOGICAL '1'

MEC 1 NON-CRITICAL COMMAND DATA WORDS

HEX DECODING LOGIC

HEX CODE	COMMAND DATA WORD 9 10 11 12	13 14 15 16	17 18 19 20	21 22 23 24	COMMAND LETTER	MSID	COMMAND DESCRIPTION
8000	1 0 0 0	0 0 0 0	0 0 0 0	0 0 0 0	RES TEST	V76K7001B	PIC RESISTANCE TEST
4000	0 1 0 0	0 0 0 0	0 0 0 0	0 0 0 0	A	V76K7002S	L SRB POWER A
2000	0 0 1 0	0 0 0 0	0 0 0 0	0 0 0 0	B	V76K7003B	R SRB POWER A
1000	0 0 0 1	0 0 0 0	0 0 0 0	0 0 0 0	C	V76K6955B	SRB IGN FIRE 3
0800	0 0 0 0	1 0 0 0	0 0 0 0	0 0 0 0	D	V76K4612B	L T-O UMB REL FIRE 3
0400	0 0 0 0	0 1 0 0	0 0 0 0	0 0 0 0	E	V76K7006B	L SRB RSS POWER OFF
0200	0 0 0 0	0 0 1 0	0 0 0 0	0 0 0 0	F	V76K7007B	R SRB RSS POWER OFF
0100	0 0 0 0	0 0 0 1	0 0 0 0	0 0 0 0	G	V76K6960B	SRB SEP FIRE 3
0080	0 0 0 0	0 0 0 0	1 0 0 0	0 0 0 0	H	V76K4625B	ET/UMB UNLATCH FIRE 3
0040	0 0 0 0	0 0 0 0	0 1 0 0	0 0 0 0	I	V76K9003B	ET DFI POWER ON ▷
0020	0 0 0 0	0 0 0 0	0 0 1 0	0 0 0 0	J	V76K7011B	L SRB POWER C
0010	0 0 0 0	0 0 0 0	0 0 0 1	0 0 0 0	K	V76K7012B	R SRB POWER C
0008	0 0 0 0	0 0 0 0	0 0 0 0	1 0 0 0	L	V76K7013B	ATVC 2 SRB IVD A PWR ON
0004	0 0 0 0	0 0 0 0	0 0 0 0	0 1 0 0	M	V76K7014B	ATVC 4 SRB IVD B PWR ON
0002	0 0 0 0	0 0 0 0	0 0 0 0	0 0 1 0	N	V76K4657B	ET/UMB RETR FIRE 3
0001	0 0 0 0	0 0 0 0	0 0 0 0	0 0 0 1	O	V76K6921B	ET/ORB STRUCT SEP FIRE 3

MEC 2 NON-CRITICAL COMMAND DATA WORDS

HEX DECODING LOGIC

HEX CODE	COMMAND DATA WORD 9 10 11 12	13 14 15 16	17 18 19 20	21 22 23 24	COMMAND LETTER	MSID	COMMAND DESCRIPTION
8000	1 0 0 0	0 0 0 0	0 0 0 0	0 0 0 0	RES TEST	V76K7101B	PIC RESISTANCE TEST
4000	0 1 0 0	0 0 0 0	0 0 0 0	0 0 0 0	A	V76K7102B	L SRB POWER B
2000	0 0 1 0	0 0 0 0	0 0 0 0	0 0 0 0	B	V76K7103B	R SRB POWER B
1000	0 0 0 1	0 0 0 0	0 0 0 0	0 0 0 0	C	V76K6965B	SRB IGN FIRE 3
0800	0 0 0 0	1 0 0 0	0 0 0 0	0 0 0 0	D	V76K4616B	L T-O UMB REL FIRE 3
0400	0 0 0 0	0 1 0 0	0 0 0 0	0 0 0 0	E	V76K7106B	L SRB RSS POWER OFF
0200	0 0 0 0	0 0 1 0	0 0 0 0	0 0 0 0	F	V76K7107B	R SRB RSS POWER OFF
0100	0 0 0 0	0 0 0 1	0 0 0 0	0 0 0 0	G	V76K6970B	SRB SEP FIRE 3
0080	0 0 0 0	0 0 0 0	1 0 0 0	0 0 0 0	H	V76K4626B	ET/UMB UNLATCH FIRE 3
0040	0 0 0 0	0 0 0 0	0 1 0 0	0 0 0 0	I	V76K9103B	ET DFI POWER ON ▷
0020	0 0 0 0	0 0 0 0	0 0 1 0	0 0 0 0	J	V76K7111B	L SRB POWER C
0010	0 0 0 0	0 0 0 0	0 0 0 1	0 0 0 0	K	V76K7112B	R SRB POWER C
0008	0 0 0 0	0 0 0 0	0 0 0 0	1 0 0 0	L	V76K7113B	ATVC 1 SRB IVD A PWR ON
0004	0 0 0 0	0 0 0 0	0 0 0 0	0 1 0 0	M	V76K7114B	ATVC 3 SRB IVD B PWR ON
0002	0 0 0 0	0 0 0 0	0 0 0 0	0 0 1 0	N	V76K4661B	ET/UMB RETR FIRE 3
0001	0 0 0 0	0 0 0 0	0 0 0 0	0 0 0 1	O	V76K6922B	ET/ORB STRUCT SEP FIRE 3

MEC 1 AND MEC 2 COMMAND WORDS

COMMAND WORD CONTROL FIELD: MODE CONTROL FIELD 9 10 11 12 13	MODULE ADDRESS FIELD 14 15 16 17	CHANNEL ADDRESS FIELD 18 19 20 21 22	NUMBER OF WORDS FIELD 23 24 25 26 27	MEC 1 MSID	MEC 2 MSID	COMMAND DESCRIPTION
0 1 0 1 0	0 0 0 0	X 1 0 1 1	0 0 0 0 1	V76K8351B	V76K8851B	PRE-FLIGHT BITE TEST RESULT CMD
0 1 0 0 0	0 0 0 0	X 0 0 0 0	0 0 0 0 0	V76K8371B	V76K8871B	NON-CRIT DATA VERIF SEND CMD
0 1 0 1 0	0 0 0 0	X 1 1 1 0	0 0 0 0 0	V76K8372B	V76K8872B	NON-CRIT DATA VERIF RETURN CMD
0 0 1 0 0	0 0 0 0	X 0 0 0 0	0 0 0 0 0	V76K8400B	V76K8900B	PIC SIM CAP VOLT ENABLE CMD
0 1 0 0 1	1 1 1 1	X 0 0 0 0	0 0 0 0 1	V76K7099B	V76K7199B	OPER PIC CAPACITOR VOLT READ CMD
0 1 0 0 1	1 1 1 1	X 1 0 0 0	0 0 0 0 1	V76K7059B	V76K7159B	PIC LOAD/RESISTANCE TEST STATUS
0 1 0 1 0	0 0 0 0	X 1 0 1 1	0 0 0 0 0	V76K7097B	V76K7197B	OPER BITE TEST RESULT CMD
0 1 0 0 0	1 0 1 1	X 0 0 0 0	0 0 0 0 0	V76M7100OP	V76M7100P	SET NON-CRITICAL CMD
0 1 0 0 0	0 1 1 1	X 0 0 0 0	0 0 0 0 0	V76M7019P	V76M7119P	RESET NON-CRITICAL CMD
0 1 0 0 0	0 0 0 0	X 0 0 0 0	0 0 0 Y Y	N/A	N/A	SET CRITICAL CMD
0 1 0 1 1	0 0 0 0	X 0 0 0 0	0 0 0 0 0	V76K7098B	V76K7198B	MASTER RESET (RESET CRIT) CMD

X = EITHER 1 OR 0
Y = FUNCTION OF THE NUMBER OF WORDS

MEC 1 CRITICAL COMMAND DATA WORDS

HEX DECODING LOGIC

HEX CODE	COMMAND DATA WORD 9 10 11 12	13 14 15 16	17 18 19 20	21 22 23 24	MSID	COMMAND DESCRIPTION
3EAC	0 0 1 1	1 1 1 0	1 0 1 0	1 1 0 0	V76K6951B	SRB IGNITION ARM
3E6A	0 0 1 1	1 1 1 0	0 1 1 0	1 0 1 0	V76K6953B	SRB IGNITION FIRE 1
3E42	0 0 1 1	1 1 1 0	0 1 0 0	0 0 1 0	V76K6954B	SRB IGNITION FIRE 2
3154	0 0 1 1	0 0 0 1	0 1 0 1	0 1 0 0	V76K6956B	SRB SEPARATION ARM
316A	0 0 1 1	0 0 0 1	0 1 1 0	1 0 1 0	V76K6958B	SRB SEPARATION FIRE 1
3198	0 0 1 1	0 0 0 1	1 0 0 1	1 0 1 1	V76K6959B	SRB SEPARATION FIRE 2
C121	1 1 0 0	0 0 0 1	0 0 1 0	0 0 0 1	V76K4617B	ET/UMB UNLATCH ARM
C162	1 1 0 0	0 0 0 1	0 1 1 0	0 0 1 0	V76K4619B	ET/UMB UNLATCH FIRE 1
C193	1 1 0 0	0 0 0 1	1 0 0 1	0 0 1 1	V76K4623B	ET/UMB UNLATCH FIRE 2
7463	0 1 1 1	0 1 0 0	0 1 1 0	0 0 1 1	V76K4655B	ET/UMB RETRACT FIRE 1
7498	0 1 1 1	0 1 0 0	1 0 0 1	1 0 0 0	V76K4656B	ET/UMB RETRACT FIRE 2
E117	1 1 1 0	0 0 0 1	0 0 1 1	0 1 1 1	V76K9009B	ET/ORB STRUCT SEP ARM
E168	1 1 1 0	0 0 0 1	0 1 1 0	1 0 0 0	V76K9013B	ET/ORB STRUCT SEP FIRE 1
E199	1 1 1 0	0 0 0 1	1 0 0 1	1 0 0 1	V76K6914B	ET/ORB STRUCT SEP FIRE 2
CEDC	1 1 0 0	1 1 1 0	1 1 0 1	1 1 0 0	V76K4609B	L T-O UMB RELEASE ARM
CE6A	1 1 0 0	1 1 1 0	0 1 1 0	1 0 1 0	V76K4610B	L T-O UMB RELEASE FIRE 1
CE9A	1 1 0 0	1 1 1 0	1 0 0 1	1 0 1 0	V76K4611B	L T-O UMB RELEASE FIRE 2
EBC2	1 1 1 0	1 0 1 1	1 1 0 0	0 0 1 0	V76K7504B	ET TUMBLE ARM
EB68	1 1 1 0	1 0 1 1	0 1 1 0	1 0 0 0	V76K7508B	L SRB RSS SAFE 1
EB95	1 1 1 0	1 0 1 1	1 0 0 1	1 0 0 1	V76K7509B	R SRB RSS SAFE 2
ECB6	1 1 1 0	1 1 0 0	1 0 1 1	0 1 1 0	V76K7505B	ET TUMBLE FIRE
EC68	1 1 1 0	1 1 0 0	0 1 1 0	1 0 0 0	V76K7515B	ATVC 2 SRB 26V DEAD FACE
EC90	1 1 1 0	1 1 0 0	1 0 0 1	1 1 0 1	V76K7516B	ATVC 4 SRB 26V DEAD FACE

MEC 2 CRITICAL COMMAND DATA WORDS

HEX DECODING LOGIC

HEX CODE	COMMAND DATA WORD 9 10 11 12	13 14 15 16	17 18 19 20	21 22 23 24	MSID	COMMAND DESCRIPTION
3EAC	0 0 1 1	1 1 1 0	1 0 1 0	1 1 0 0	V76K6961B	SRB IGNITION ARM
3E6A	0 0 1 1	1 1 1 0	0 1 1 0	1 0 1 0	V76K6963B	SRB IGNITION FIRE 1
3E42	0 0 1 1	1 1 1 0	0 1 0 0	0 0 1 0	V76K6964B	SRB IGNITION FIRE 2
3154	0 0 1 1	0 0 0 1	0 1 0 1	0 1 0 0	V76K6966B	SRB SEPARATION ARM
316A	0 0 1 1	0 0 0 1	0 1 1 0	1 0 1 0	V76K6968B	SRB SEPARATION FIRE 1 & RECOVERY ON
3198	0 0 1 1	0 0 0 1	1 0 0 1	1 0 1 1	V76K6969B	SRB SEPARATION FIRE 2 & RECOVERY ARM
C121	1 1 0 0	0 0 0 1	0 0 1 0	0 0 0 1	V76K4618B	ET/UMB UNLATCH ARM
C162	1 1 0 0	0 0 0 1	0 1 1 0	0 0 1 0	V76K4620B	ET/UMB UNLATCH FIRE 1
C193	1 1 0 0	0 0 0 1	1 0 0 1	0 0 1 1	V76K4624B	ET/UMB UNLATCH FIRE 2
7463	0 1 1 1	0 1 0 0	0 1 1 0	0 0 1 1	V76K4659B	ET/UMB RETRACT FIRE 1
7498	0 1 1 1	0 1 0 0	1 0 0 1	1 0 0 0	V76K4660B	ET/UMB RETRACT FIRE 2
E117	1 1 1 0	0 0 0 1	0 0 1 1	0 1 1 1	V76K9911B	ET/ORB STRUCT SEP ARM
E168	1 1 1 0	0 0 0 1	0 1 1 0	1 0 0 0	V76K6915B	ET/ORB STRUCT SEP FIRE 1
E199	1 1 1 0	0 0 0 1	1 0 0 1	1 0 0 1	V76K6916B	ET/ORB STRUCT SEP FIRE 2
CEDC	1 1 0 0	1 1 1 0	1 1 0 1	1 1 0 0	V76K4613B	R T-O UMB RELEASE ARM
CE6A	1 1 0 0	1 1 1 0	0 1 1 0	1 0 1 0	V76K4614B	R T-O UMB RELEASE FIRE 1
CE9A	1 1 0 0	1 1 1 0	1 0 0 1	1 0 1 0	V76K4615B	R T-O UMB RELEASE FIRE 2
EBC2	1 1 1 0	1 0 1 1	1 1 0 0	0 0 1 0	V76K7604B	ET TUMBLE ARM
EB68	1 1 1 0	1 0 1 1	0 1 1 0	1 0 0 0	V76K7608B	R SRB RSS SAFE 1
EB95	1 1 1 0	1 0 1 1	1 0 0 1	1 0 0 1	V76K7609B	L SRB RSS SAFE 2
ECB6	1 1 1 0	1 1 0 0	1 0 1 1	0 1 1 0	V76K7605B	ET TUMBLE FIRE
EC68	1 1 1 0	1 1 0 0	0 1 1 0	1 0 0 0	V76K7615B	ATVC 1 SRB 26V DEAD FACE
EC90	1 1 1 0	1 1 0 0	1 0 0 1	1 1 0 1	V76K7616B	ATVC 3 SRB 26V DEAD FACE

▷ THE COMMAND SYNCHRONIZATION FIELD IS A THREE BIT TIME NON-VALID MANCHESTER SYNCHRONIZATION CODE, THUS, EACH WORD HAS A 3 MICROSECOND CODE, WITH THE FIRST 1 1/2 MICROSECONDS IN THE "1" OR "OFF" POSITION AND THE NEXT 1 1/2 MICROSECONDS IN THE "0" OR "OFF" POSITION

1 MICROSECOND
BIT NUMBER 1 2 3
1 1/2 MICROSECONDS
MANCHESTER WAVE FORM

▷ THE MEC ADDRESS FIELD IS DEFINED BY TWO POSSIBLE COMBINATIONS, WHEN A COMMAND WORD OR DATA WORD RETURNS FROM OR IS SENT TO EITHER MEC 1 OR MEC 2, THEN THE MEC ADDRESS FIELD BIT COUNT WILL BE AS SHOWN

BIT NUMBER 14 15 16 17
MEC 1 1 0 1 1
MEC 2 1 0 1 0

4. REFER TO TABLE 10.1I-2 FOR VENDOR DRAWING REFERENCES

▷ NOT EVERY COMMAND STRING WILL HAVE A RESPONSE DATA WORD, ALL RESPONSE DATA WORDS ARE USED ONLY FOR PRE-FLIGHT CHECKS NO RESPONSE DATA WORDS ARE TRANSFERRED DURING ACTUAL FLIGHT

▷ THE "ET DFI POWER ON" COMMANDS ARE NON-EXISTANT IN THE CURRENT MEC SOP, THEY MAY BE REINSTATED AT A LATER DATE

NOTES: ▷ REFERENCE COMMAND MESSAGE OUTPUTS IN DRAWING 10.1I MASTER EVENTS CONTROLLER OVERVIEW

1 MEC CMD TBL

SIGNATURE	DATE	NATIONAL AERONAUTICS AND SPACE ADMINISTRATION LYNDON B. JOHNSON SPACE CENTER HOUSTON, TEXAS
DSGN RICHARD A. GILLESPIE	9/28/87	
DR RICHARD A. GILLESPIE	9/28/87	MEC COMMAND TABLE TABLE 10. I
CHKR H.G. SHUTTLETT	11/30/90	
CHKR		
APPR		SPACE SHUTTLE DWG NO 10. 1
APPR		
CHIEF,PLANS & P. Campbell	11-27-90	ALL
SIZE E	CODE	SCALE NONE SHEET 1 OF 4

BASIC REV E

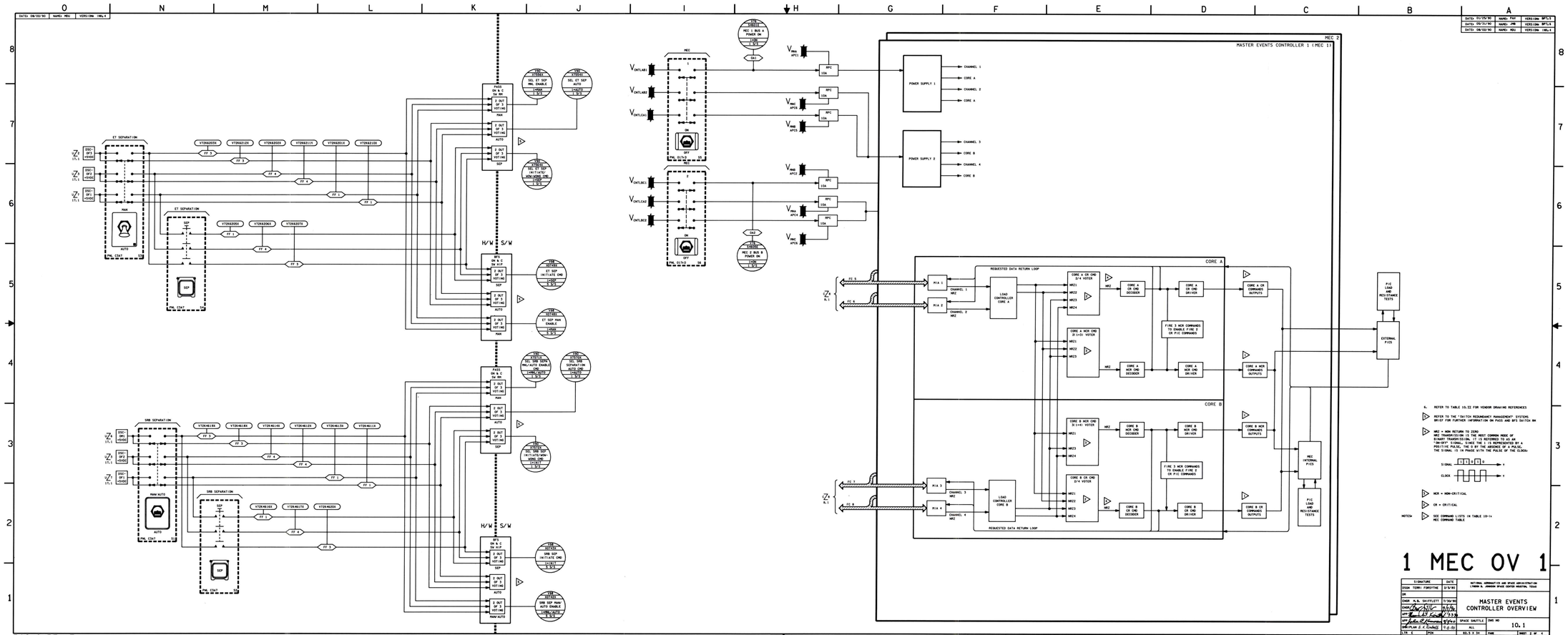
MEC 2
MASTER EVENTS CONTROLLER 1 (MEC 1)
POWER SUPPLY 1
POWER SUPPLY 2
CHANNEL 1
CORE A
CHANNEL 2
CORE A
CHANNEL 3
CORE B
CHANNEL 4
CORE B
CORE A
CORE B
REQUESTED DATA RETURN LOOP
LOAD CONTROLLER CORE A
LOAD CONTROLLER CORE B
MIA 1
MIA 2
MIA 3
MIA 4
CORE A CR CMD D1 I+1 VOTER
CORE A CR CMD D2 I+2 VOTER
CORE A MCR CMD D1 I+1 VOTER
CORE A MCR CMD D2 I+2 VOTER
CORE B CR CMD D1 I+1 VOTER
CORE B CR CMD D2 I+2 VOTER
CORE B MCR CMD D1 I+1 VOTER
CORE B MCR CMD D2 I+2 VOTER
CORE A CR CMD DECODER
CORE A MCR CMD DECODER
CORE B CR CMD DECODER
CORE B MCR CMD DECODER
CORE A CR CMD DRIVER
CORE A MCR CMD DRIVER
CORE B CR CMD DRIVER
CORE B MCR CMD DRIVER
CORE A CR COMMAND OUTPUTS
CORE A MCR COMMAND OUTPUTS
CORE B CR COMMAND OUTPUTS
CORE B MCR COMMAND OUTPUTS
FINE 3 MCR COMMANDS TO ENABLE FINE 2 CR P/C COMMANDS
FINE 3 MCR COMMANDS TO ENABLE FINE 2 CR P/C COMMANDS
P/C LOAD AND RESISTANCE TESTS
EXTERNAL P/CS
MEC INTERNAL P/CS
P/C LOAD AND RESISTANCE TESTS
PASS ON A C ON MAN
BFS ON A C ON MAN
PASS ON A C ON AUTO
BFS ON A C ON AUTO
MAN
AUTO
SEP
ET SEPARATION
SRB SEPARATION
MAN/AUTO
MEC 1 BUS A POWER ON
MEC 2 BUS B POWER ON
MEC
PWL C1A1
PWL C1A2
PWL C1B1
PWL C1B2
MPC 10A
MEC 1 OVERALL
MEC 2 OVERALL
SIGNAL
CLOCK
MCR = NON-CRITICAL
CR = CRITICAL
NOTES:
4. REFER TO TABLE 10.22 FOR VENDOR DRAWING REFERENCES
REFER TO THE "SWITCH REDUNDANCY MANAGEMENT" SYSTEMS BRIEF FOR FURTHER INFORMATION ON PASS AND BFS SWITCH RM
MR2 = MCR RETURN TO ZERO
MR2 IS USED TO PUT THE MOST COMMON MODE OF BINARY TRANSITIONS, IT IS REFERRED TO AS AN "ON-OFF" SIGNAL. SINCE THE 1 IS REPRESENTED BY A POSITIVE PULSE, THE 0 BY THE ABSENCE OF A PULSE, THE SIGNAL IS IN PHASE WITH THE PULSE OF THE CLOCK
SEE COMMAND LISTS IN TABLE 10-1+ MEC COMMAND TABLE
1 MEC OV 1
SIGNATURE
DESIGN TERRI FORSYTHE
DR
CHKR R.A. SHIFFLETT
CHIEF
APP
APP
APP
DATE
11/30/90
11/30/90
11/30/90
11/30/90
11/30/90
NATIONAL AERONAUTICS AND SPACE ADMINISTRATION
LYNDON B. JOHNSON SPACE CENTER HOUSTON, TEXAS
MASTER EVENTS CONTROLLER OVERVIEW
SPACE SHUTTLE
DWG NO
10.1
ALL
SIZE B
SCALE NONE
SHEET 1 OF 4
BASIC REV E
BASIC REV E

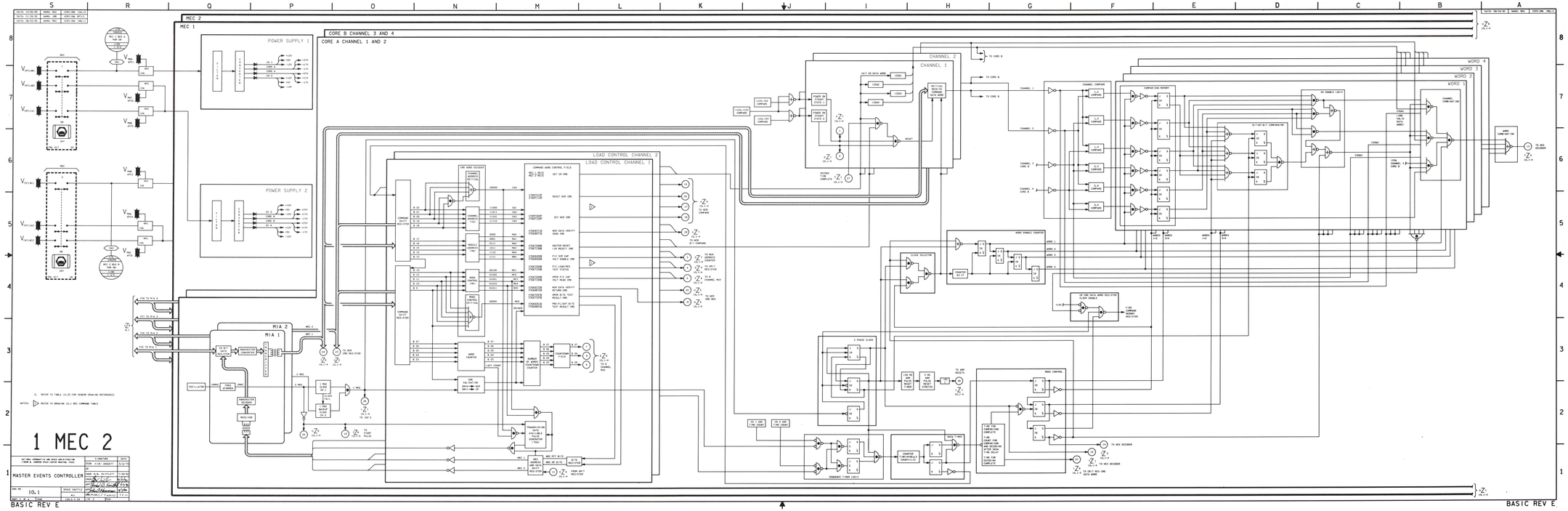
MEC 2
MEC 1
CORE B CHANNEL 3 AND 4
CORE A CHANNEL 1 AND 2
POWER SUPPLY 1
POWER SUPPLY 2
MIA 2
MIA 1
LOAD CONTROL CHANNEL 2
LOAD CONTROL CHANNEL 1
CHANNEL 2
CHANNEL 1
WORD 4
WORD 3
WORD 2
WORD 1
1 MEC 2
MASTER EVENTS CONTROLLER
BASIC REV E
BASIC REV E

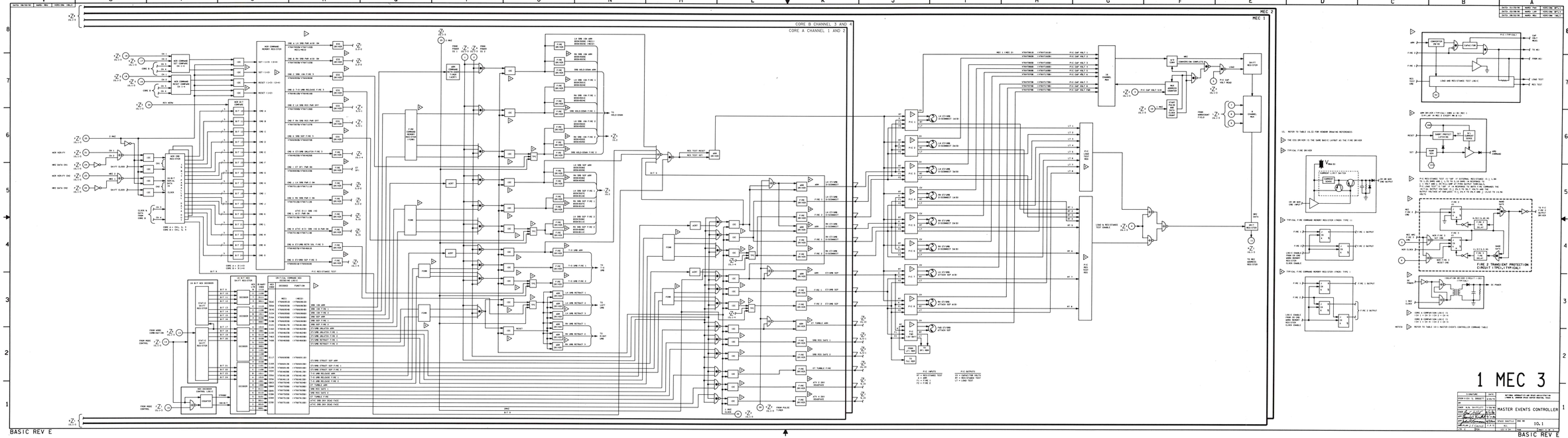
CORE B CHANNEL 3 AND 4
CORE A CHANNEL 1 AND 2
MEC 2
MEC 1
1 MEC 3
MASTER EVENTS CONTROLLER
SPACE SHUTTLE
10.1
BASIC REV E

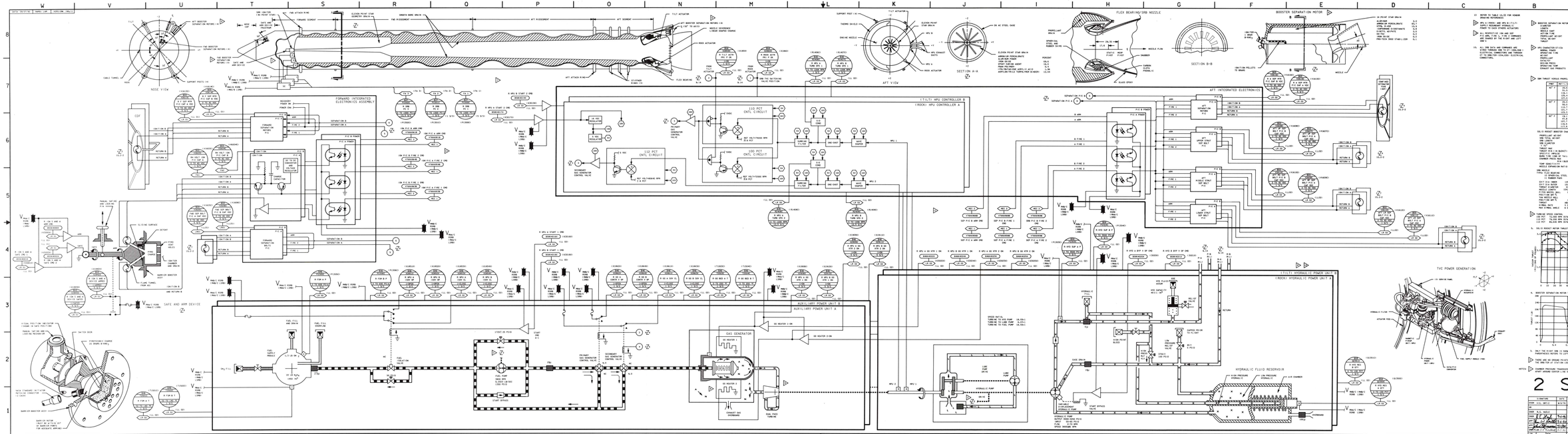

NOSE VIEW
FORWARD INTEGRATED ELECTRONICS ASSEMBLY
SAFE AND ARM DEVICE
AFT VIEW
SECTION A-A
FLEX BEARING/SRB NOZZLE
SECTION B-B
BOOSTER SEPARATION MOTOR
AFT INTEGRATED ELECTRONICS
(TILT) HPU CONTROLLER B
(ROCK) HPU CONTROLLER A
110 PCT CNTL CIRCUIT
112 PCT CNTL CIRCUIT
100 PCT CNTL CIRCUIT
AUXILIARY POWER UNIT B
AUXILIARY POWER UNIT A
GAS GENERATOR
(TILT) HYDRAULIC POWER UNIT B
(ROCK) HYDRAULIC POWER UNIT A
HYDRAULIC FLUID RESERVOIR
TVC POWER GENERATION
2 SRB 1
SOLID ROCKET BOOSTER 1
10.2
BASIC REV E

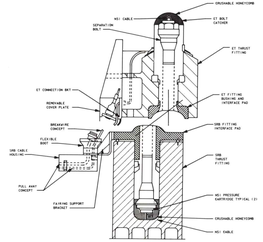

SRB/ET FWD ATTACH AND SEPARATION INTERFACES

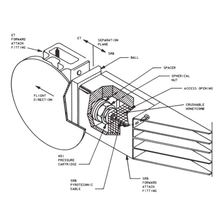

SRB/ET FWD ATTACH FITTING

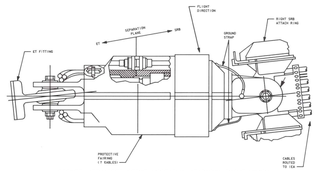

SRB/ET AFT UPPER STRUT ASSEMBLY (TYPICAL RIGHT HAND)

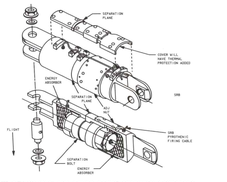

SRB/ET AFT MIDDLE AND LOWER STRUT ASSEMBLY (TYPICAL)

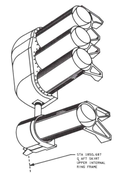

SRB AFT BOOSTER SEPARATION MOTORS (4)



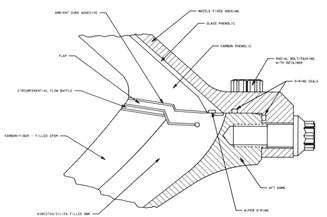

ASSEMBLED RSRM CASE TO NOZZLE JOINT -Z-

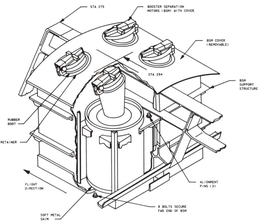

SRB FORWARD BOOSTER SEPARATION MOTORS (4)

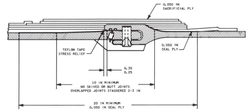

FACTORY JOINT (2)

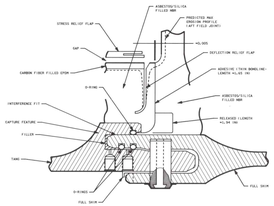

FIELD JOINT (1)

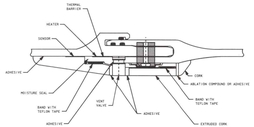

FIELD JOINT PROTECTION SYSTEM (1)

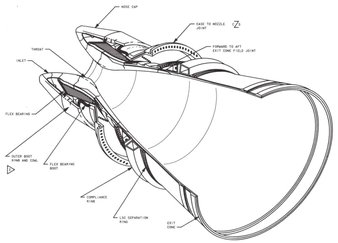

NOZZLE

▷ ALL DATA/POWER/COMMANDS GO THROUGH THE AFT UMBILICAL ONLY

▷ EACH CONE IS VENTED TO ALLOW EQUAL PRESSURE ACROSS THE FLEX SEAL BOOT

WITCH - L. REFER TO TABLE 10-02 FOR VENDOR (Manufac REFERENCE)

2 SRB 2

SIGNATURE	DATE	NOTICE: INFORMATION ON THIS DRAWING IS PROPRIETARY TO THE MORTON THIOKOL, INCORPORATED SPACE BOOSTER PROGRAM. ACCEPTANCE OF THIS DRAWING CONSTITUTES AGREEMENT THAT THE INFORMATION CONTAINED HEREIN WILL NOT BE DISCLOSED TO OTHERS WITHOUT THE WRITTEN CONSENT OF MORTON THIOKOL, INCORPORATED.
STAN SL. R. HARRELL	8-1-87	
DR SL. R. HARRELL	8-1-87	
CHKR R.C. WALLS		SOLID ROCKET BOOSTER 2
APPD R.C. Walls	8-3-87	
APPD M.F. Thomson	8-3-87	SPACE SHUTTLE DWG NO 10.2
APPD W.F. FRANCIS	8-3-87	SIZE A1
CM — DATE		SCALE 1:1 SHEET 1 OF 2

BASIC REV E

BASIC REV E

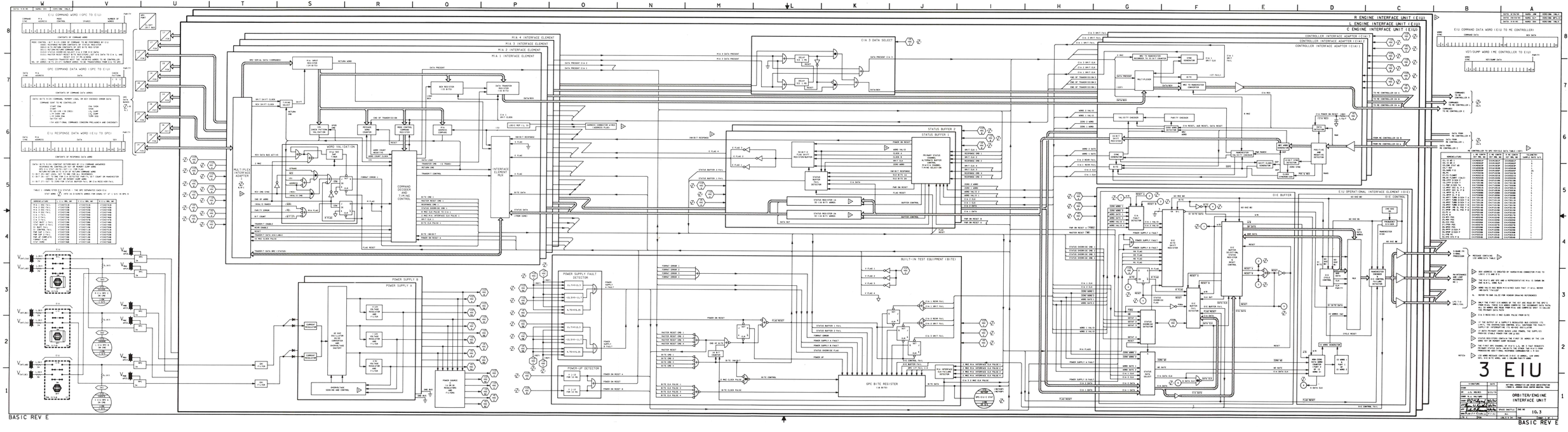
EIU COMMAND WORD (GPC TO EIU)
GPC COMMAND DATA WORD (GPC TO EIU)
EIU RESPONSE DATA WORD (EIU TO GPC)
WORD VALIDATION
COMMAND DECODER & TIMING CONTROL
MULTIPLEX INTERFACE ADAPTER
INTERFACE ELEMENT MUX
STATUS BUFFER 1
STATUS BUFFER 2
BUILT-IN TEST EQUIPMENT (BITE)
POWER SUPPLY A
POWER SUPPLY B
POWER SUPPLY FAULT DETECTOR
POWER-UP DETECTOR
GPC BITE REGISTER (16 BITS)
B ENGINE INTERFACE UNIT (EIU)
L ENGINE INTERFACE UNIT (EIU)
C ENGINE INTERFACE UNIT (EIU)
CONTROLLER INTERFACE ADAPTER (CIA) 1
CONTROLLER INTERFACE ADAPTER (CIA) 2
CONTROLLER INTERFACE ADAPTER (CIA) 3
EIU BUFFER
EIU CONTROL
EIU OPERATIONAL INTERFACE ELEMENT (OIE)
EIU COMMAND DATA WORD (EIU TO ME CONTROLLER)
VOT/SUPP WORD (ME CONTROLLER TO EIU)
3 EIU
ORBITER/ENGINE INTERFACE UNIT
BASIC REV E

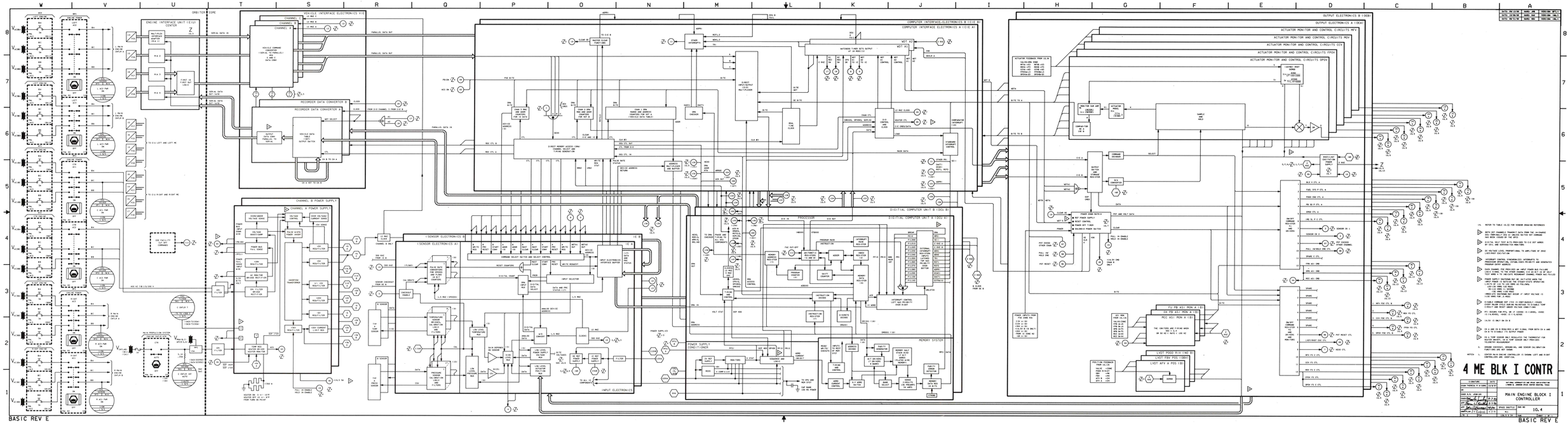
4 ME BLK I CONTR
MAIN ENGINE BLOCK I CONTROLLER
ORBITER SOME
ENGINE INTERFACE UNIT (EIU) CENTER
VEHICLE INTERFACE ELECTRONICS V1E
RECORDER DATA CONVERTER A
RECORDER DATA CONVERTER B
CHANNEL A POWER SUPPLY
CHANNEL B POWER SUPPLY
I SENSOR ELECTRONICS A1
I SENSOR ELECTRONICS B1
COMPUTER INTERFACE ELECTRONICS B (CIE-B)
COMPUTER INTERFACE ELECTRONICS A (CIE-A)
DIGITAL COMPUTER UNIT B (DCU-B)
DIGITAL COMPUTER UNIT A (DCU-A)
PROCESSOR
MEMORY SYSTEM
POWER SUPPLY CONDITIONER
INPUT ELECTRONICS
OUTPUT ELECTRONICS B (OEB)
OUTPUT ELECTRONICS A (OEA)
ACTUATOR MONITOR AND CONTROL CIRCUITS MFV
ACTUATOR MONITOR AND CONTROL CIRCUITS MOV
ACTUATOR MONITOR AND CONTROL CIRCUITS OPOV
ACTUATOR MONITOR AND CONTROL CIRCUITS FPOV
MAIN ENGINE BLOCK I CONTROLLER
SPACE SHUTTLE
10.4
BASIC REV E

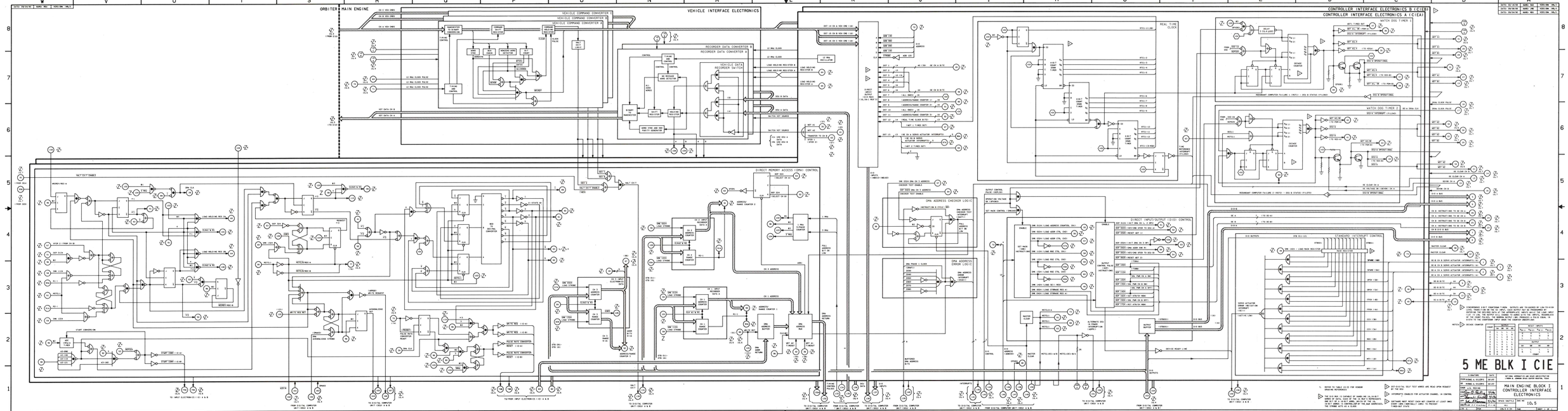
ORBITER MAIN ENGINE
VEHICLE INTERFACE ELECTRONICS
CONTROLLER INTERFACE ELECTRONICS B (CIEB)
CONTROLLER INTERFACE ELECTRONICS A (CIEA)
VEHICLE COMMAND CONVERTER C
VEHICLE COMMAND CONVERTER B
VEHICLE COMMAND CONVERTER A
RECORDER DATA CONVERTER B
RECORDER DATA CONVERTER A
VEHICLE DATA RECORDER SWITCH
REAL TIME CLOCK
WATCH DOG TIMER 1
WATCH DOG TIMER 2
DIRECT MEMORY ACCESS (DMA) CONTROL
DMA ADDRESS CHECKER LOGIC
DMA ADDRESS ERROR LOGIC
DIRECT INPUT/OUTPUT (DIO) CONTROL
STANDARD INTERRUPT CONTROL
5 ME BLK I CIE
MAIN ENGINE BLOCK I
CONTROLLER INTERFACE
ELECTRONICS
10.5
BASIC REV E

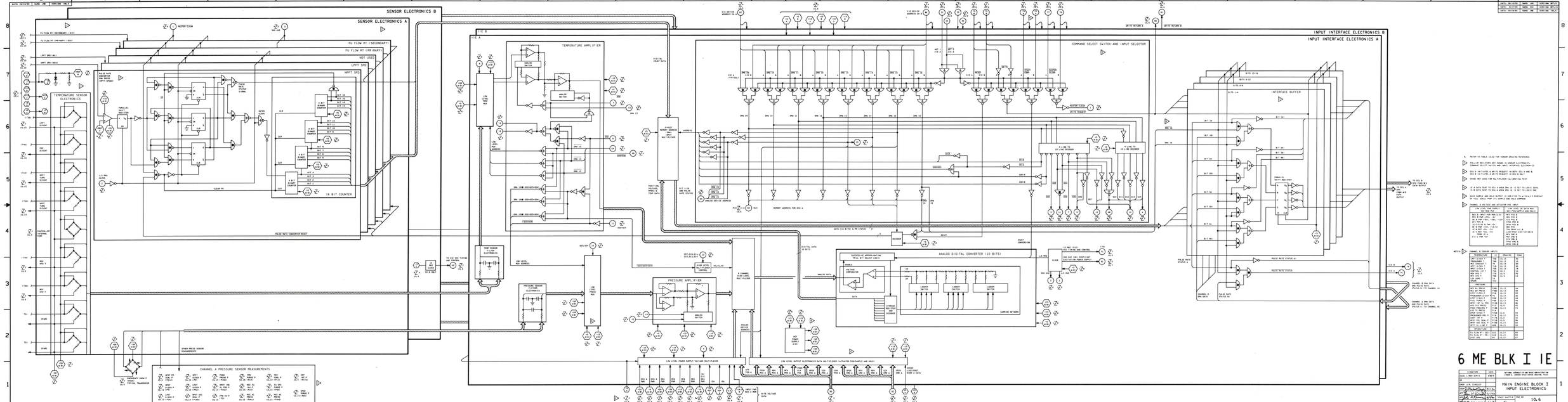
SENSOR ELECTRONICS B
SENSOR ELECTRONICS A
TEMPERATURE SENSOR ELECTRONICS
16 BIT COUNTER
PULSE RATE GENERATOR RESET
FU FLOW RT (SECONDARY)
FU FLOW RT (PRIMARY)
NOT USED
LPFT SPD
HPFT SPD
TEMPERATURE AMPLIFIER
PRESSURE AMPLIFIER
ANALOG DIGITAL CONVERTER (10 BITS)
INPUT INTERFACE ELECTRONICS B
INPUT INTERFACE ELECTRONICS A
COMMAND SELECT SWITCH AND INPUT SELECTOR
INTERFACE BUFFER
CHANNEL A PRESSURE SENSOR MEASUREMENTS
6 ME BLK I IE
MAIN ENGINE BLOCK I
INPUT ELECTRONICS
BASIC REV E

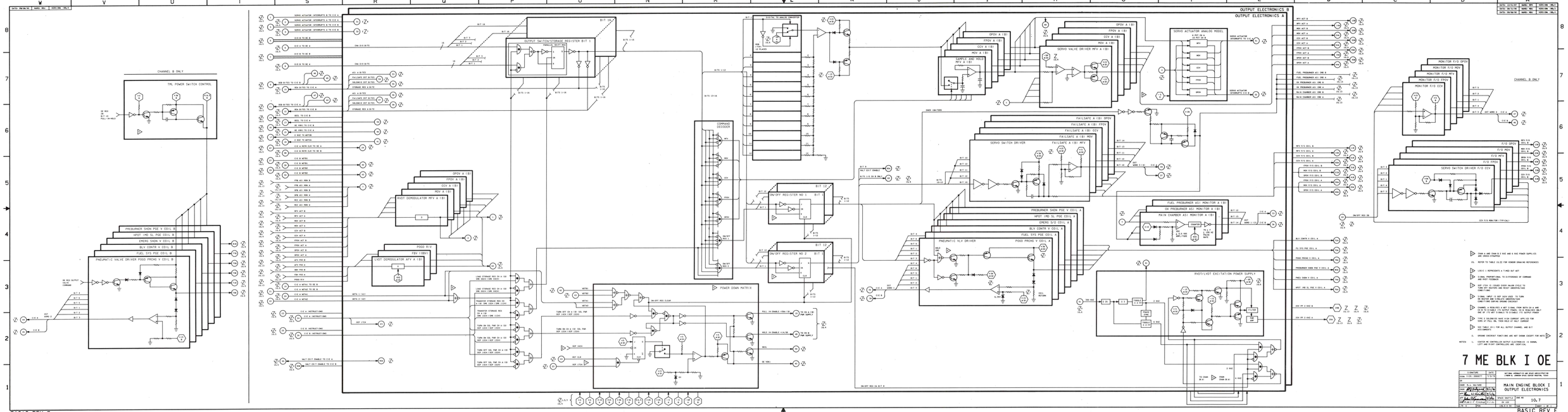
OUTPUT ELECTRONICS B
OUTPUT ELECTRONICS A
CHANNEL B ONLY
TML POWER SWITCH CONTROL
PREBURNER SHDN PDE Y COIL B
MPOT (MD SL PDE COIL B
EMERG S/O COIL B
BLV CONTR V COIL B
FUEL SYS PDE COIL B
PNEUMATIC VALVE DRIVER PDOD PROVE Y COIL B
SERVO ACTUATOR INTERRUPTS TO CIE A
SERVO ACTUATOR INTERRUPTS TO CIE B
OUTPUT SWITCH/STORAGE REGISTER BIT 1
PARALLEL SHIFT REG
DIGITAL TO ANALOG CONVERTER
SAMPLE AND HOLD
MFV A (B)
SERVO VALVE DRIVER MFV A (B)
SERVO ACTUATOR ANALOG MODEL
SERVO SWITCH DRIVER
FAILSAFE A (B) MFV
FAILSAFE A (B) OPOV
FAILSAFE A (B) FPOV
FAILSAFE A (B) CCV
PNEUMATIC VLV DRIVER
PREBURNER SHDN PDE Y COIL A
MPOT (MD SL PDE COIL A
EMERG S/O COIL A
BLV CONTR V COIL A
FUEL SYS PDE COIL A
PDOD PROVE Y COIL A
FUEL PREBURNER ASI MONITOR A (B)
OX PREBURNER ASI MONITOR A (B)
MAIN CHAMBER ASI MONITOR A (B)
RVDT/LVDT EXCITATION POWER SUPPLY
MONITOR F/O OPOV
MONITOR F/O MFV
MONITOR F/O CCV
MONITOR F/O FPOV
F/O OPOV
F/O MFV
F/O FPOV
SERVO SWITCH DRIVER F/O CCV
CCV F/O MONITOR (TYPICAL)
POWER DOWN MATRIX
COMMAND DECODER
ON/OFF REGISTER NO 1
ON/OFF REGISTER NO 2
LOAD STORAGE REG CH A (B) SHR 1024 (1MR 1024)
TRANSFER STORAGE REG CH A (B) SHR 1024 (1MR 1024)
TURN ON SOL PWR CH A (B) SCP 1024 (1CP 1024)
TURN OFF SOL PWR CH A (B) SCP 1024 (1CP 1024)
7 ME BLK I OE
MAIN ENGINE BLOCK I
OUTPUT ELECTRONICS
BASIC REV E

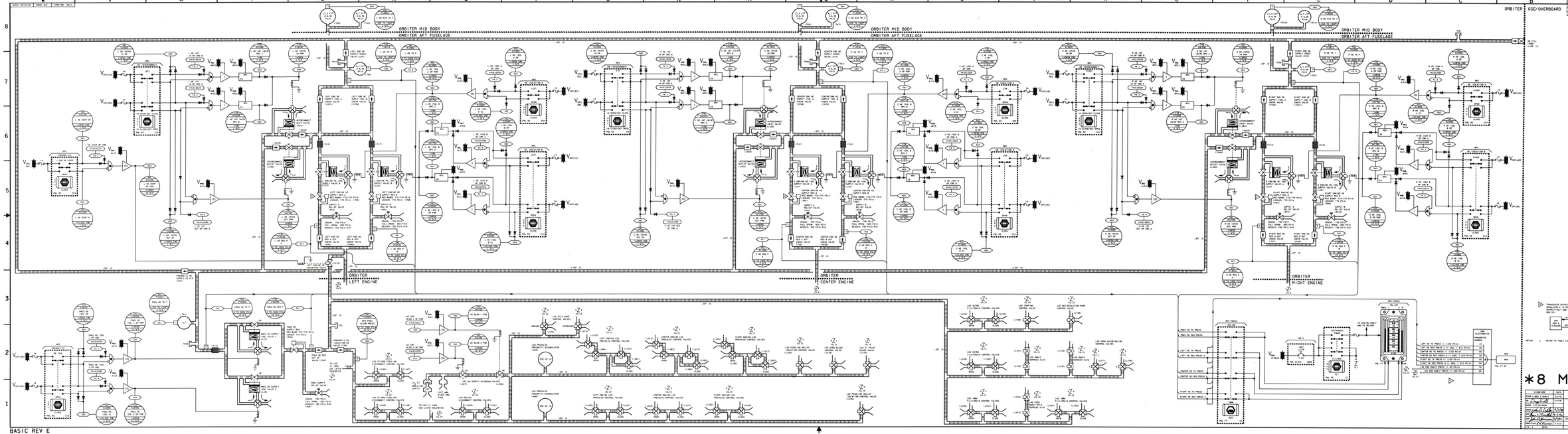
ORBITER MID BODY
ORBITER AFT FUSELAGE
ORBITER LEFT ENGINE
ORBITER CENTER ENGINE
ORBITER RIGHT ENGINE
ORBITER
GSE/OVERBOARD
*8 MPS HE
MPS HELIUM SUPPLY
10.8
BASIC REV E

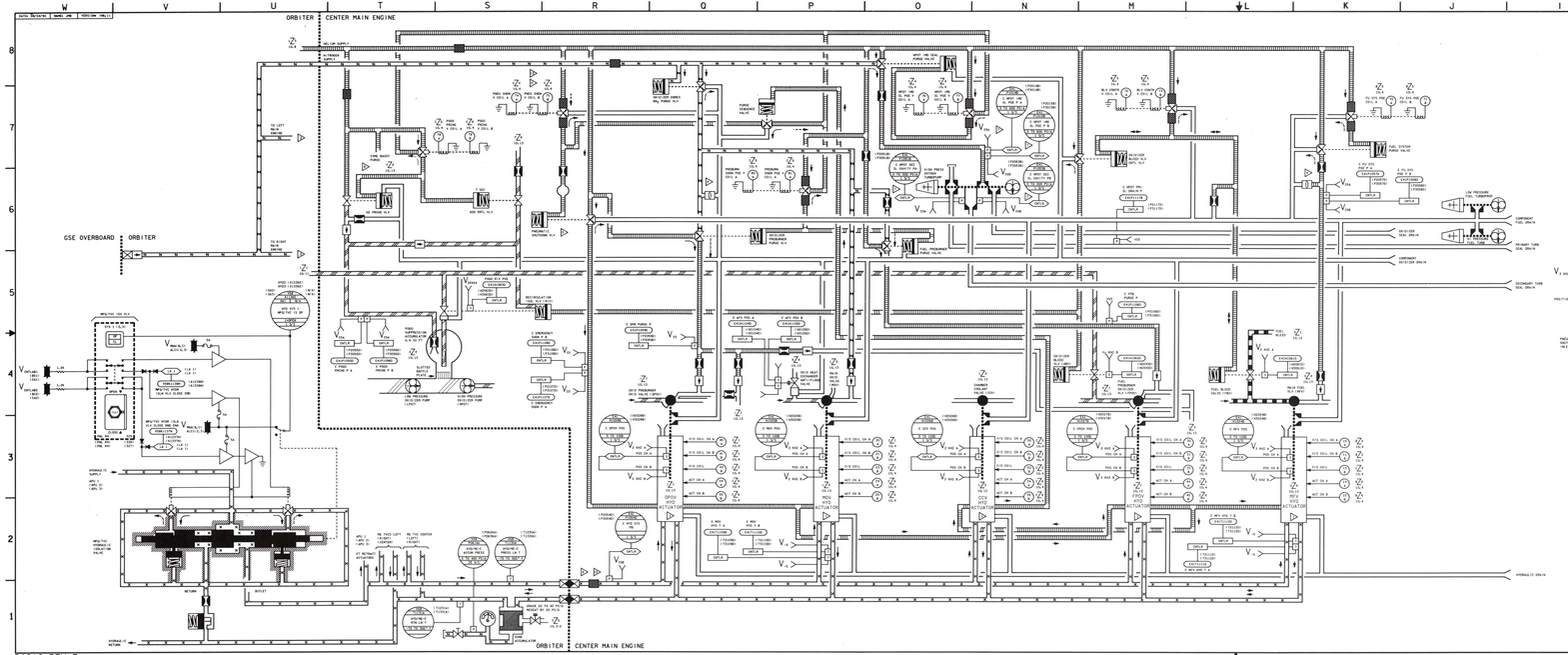

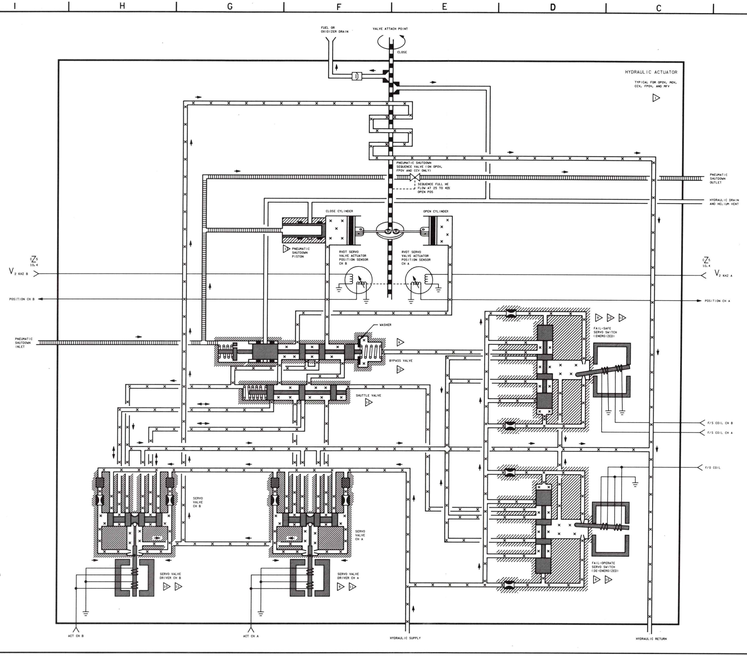

BASIC REV E

BASIC REV E

9 ME H & P

MAIN ENGINE HYDRAULICS AND PNEUMATICS

10.9

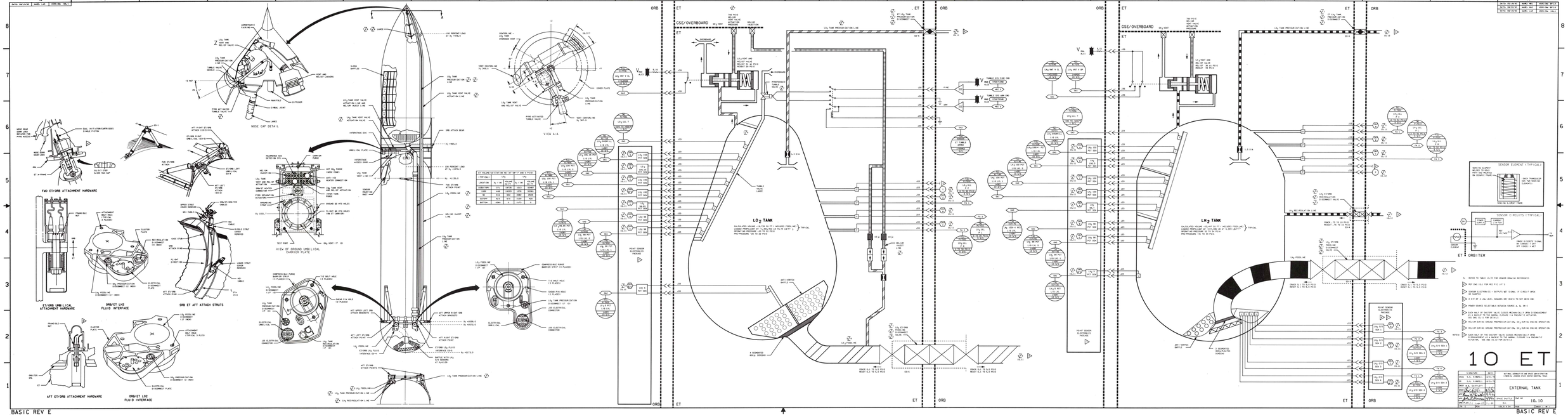

BASIC REV E

BASIC REV E

DATE: 06/18/92	NAME: LAY	ICD/DRAWING: (NULL)
DATE: 06/22/92	NAME: TAO	ICD/DRAWING: (NULL)
DATE: 06/23/92	NAME: LAY	ICD/DRAWING: (NULL)

1. REFER TO TABLE 10.2 FOR SENSOR DRAWING NO REFERENCES
2. REF DWG 10L-1 FOR MEC P+C (P1)
3. SENSOR ELECTRONICS - OUTPUTS AFT SIGNAL OF 0 VOLTS* OPEN OR SHORT
4. 0 VOLTS* AT 4 MA LEVEL SENSORS DRY PRIOR TO 5ET MECO ONE
5. POWER SOURCE SELECTABLE BETWEEN SENSOR A, A, OR B
6. EACH HALF OF SHUTOFF VALVE CLOSES MECHANICALLY AND ELECTRICALLY INDEPENDENT OF THE OTHER HALF. SEE TABLE 10.2 FOR DETAILS
7. MEL/OR (EAFM) GROUND PREPRESSURIZATION VAL (5) (EAFM) ENG MEC SPECIFICATION
8. MEL/OR (EAFM) GROUND PREPRESSURIZATION VAL (5) (EAFM) ENG MEC SPECIFICATION
9. EACH HALF OF THE SHUTOFF VALVE CLOSES MECHANICALLY UPON DISCONNECT AS A BACKUP TO THE NORMAL CLOSURE VIA PNEUMATIC ACTUATION. SEE TABLE 10.2 FOR DETAILS

NOTES:

10 ET

SIGNATURE	DATE	NATIONAL AERONAUTICS AND SPACE ADMINISTRATION
ORIGINAL SIGNED BY	12/31/92	LYNDON B. JOHNSON SPACE CENTER HOUSTON, TEXAS
ORIGINAL SIGNED BY	12/31/92	
ORIGINAL SIGNED BY	12/31/92	
ORIGINAL SIGNED BY	12/31/92	
ORIGINAL SIGNED BY	12/31/92	
ORIGINAL SIGNED BY	12/31/92	

EXTERNAL TANK

DRAWING NO.	SHEET NO.	REV
10L-1	10.10	

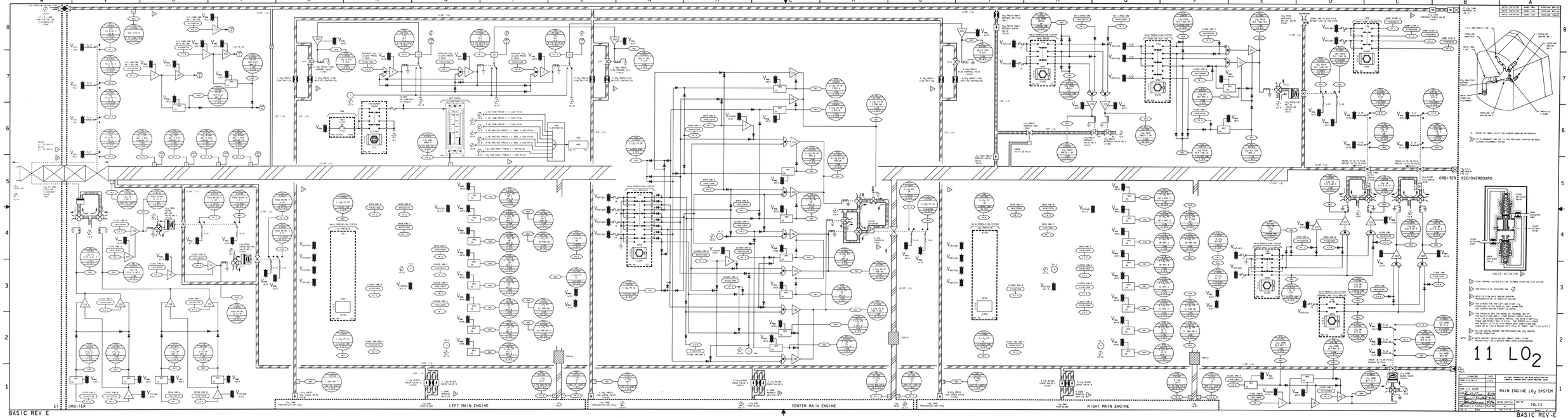
11 LO2
MAIN ENGINE LO2 SYSTEM
ORBITER
GSE/OVERBOARD
LEFT MAIN ENGINE
CENTER MAIN ENGINE
RIGHT MAIN ENGINE
BASIC REV E
BASIC REV-E

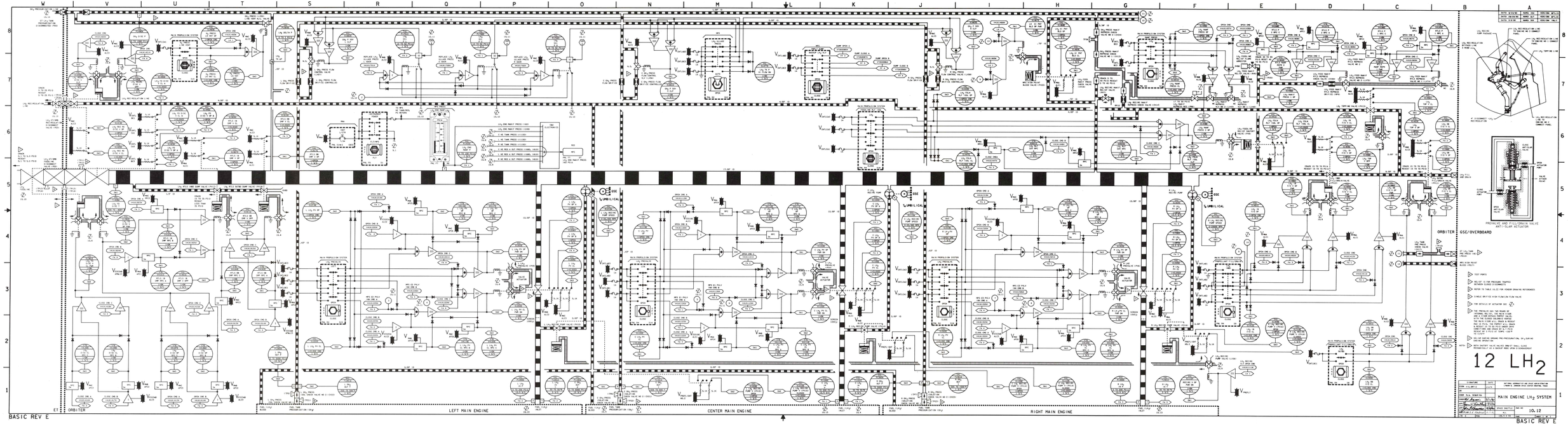
LEFT MAIN ENGINE
CENTER MAIN ENGINE
RIGHT MAIN ENGINE
ORBITER
GSE/OVERBOARD
MAIN ENGINE LH2 SYSTEM
12 LH2
10.12
BASIC REV E

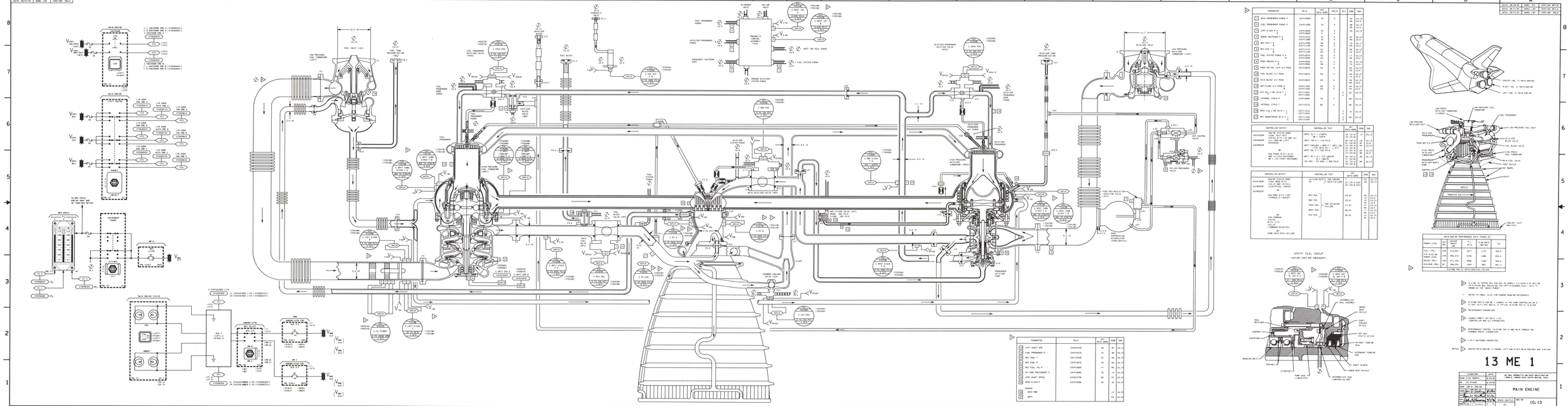
MAIN ENGINE
LOW PRESSURE FUEL TURBOPUMP (LPFTP)
LOW PRESSURE OXIDIZER TURBOPUMP (LPOTP)
HIGH PRESSURE FUEL TURBOPUMP (HPFTP)
HIGH PRESSURE OXIDIZER TURBOPUMP (HPOTP)
MAIN COMBUSTION CHAMBER
NOZZLE
THRUST STRUT
GIMBAL BEARING
HPOTP SEAL GROUP
(ENGINES 2004 AND SUBSEQUENT)
MAIN ENGINE PERFORMANCE DATA (PHASE III)
13 ME 1

BASIC REV E

DATA 0-8-16 | SPEC 216 | CPU 216 ONLY

GV-102 ONLY

FASCOS POWER SUPPLY

NOTE: IF FASCOS POWER BECOMES AN ACTIVE RETURN, THE FASCOS POWER SUPPLY MUST BE ALLOWED TO GO THE GV-104 CONFIGURATION.

GV-103 ONLY

GV-104 ONLY

ORBITER CENTER ME FASCOS

CENTER SSME (LIIR)

FASCOS ACCELEROMETER LOCATIONS

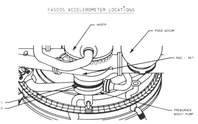

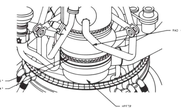

PAGE INDEX	DESCRIPTION	INTERFACE CONTROL AND RESPONSE CODES: STATUS CODE (-1ME EXEC) DB 20 DB 22 DB 19 DB 04 DB 05	DESCRIPTION
1ME 1303	READ ESS, BSS, A2 STATUS	0 1 1 0 1 0 X X	ASSOC STATUS ESS, BSS, A2
1ME 1280	READ ESS, BSS, A2 STATUS	1 0 1 1 1 0 X X	ASSOC STATUS ESS, BSS, A2
BEP 1285	CLEAR TEST SEQUENCE	1 1 1 1 0 0 0 0	CLEAR STATE
BEP 1303	INITIATE BITE TEST	0 0 0 0 1 1 1 1	BITE TEST STEP 0 (ALL FAIL)
BEP 1303	MICROPAT BITE TEST	0 1 0 0 1 0 X X	BITE TEST STEP 1, CH A1 TEST
BEP 1303	MICROPAT BITE TEST	1 0 0 0 1 0 X X	BITE TEST STEP 2, CH A2 TEST
BEP 1303	MICROPAT BITE TEST	0 1 0 0 1 1 X X	BITE TEST STEP 3, CH E2 TEST
BEP 1303	MICROPAT BITE TEST	1 0 1 0 0 0 X X	BITE TEST STEP 4, CH A1 TEST
BEP 1303	MICROPAT BITE TEST	1 0 1 0 1 0 X X	BITE TEST STEP 5, CH A1 TEST
BEP 1303	MICROPAT BITE TEST	1 0 1 1 0 0 X X	BITE TEST STEP 6, CH E1 TEST
BEP 1285	CLEAR TEST SEQUENCE	1 1 1 1 0 0 0 0	CLEAR STATE
BEP 1290	INITIATE ACCEL TEST	0 0 0 0 1 1 1 1	ACCEL TEST STEP 0 (ALL FAIL)
BEP 1290	MICROPAT ACCEL TEST	0 1 0 0 0 1 — — X	ACCEL TEST STEP 1, ACCEL A1 TEST
BEP 1290	MICROPAT ACCEL TEST	0 1 0 1 0 0 X X —	ACCEL TEST STEP 2, ACCEL A1 TEST
BEP 1290	MICROPAT ACCEL TEST	0 1 0 1 1 0 X X —	ACCEL TEST STEP 3, ACCEL E1 TEST
BEP 1290	MICROPAT ACCEL TEST	1 0 1 0 0 0 — — X	ACCEL TEST STEP 4, ACCEL A1 TEST
BEP 1290	MICROPAT ACCEL TEST	1 0 1 0 1 0 X — X	ACCEL TEST STEP 5, ACCEL A1 TEST
BEP 1285	MICROPAT ACCEL TEST	1 0 1 1 1 0 X X —	ACCEL TEST STEP 6, ACCEL E1 TEST

SIGNAL CONDITIONING/LOGIC CONTROL C

SIGNAL CONDITIONING/LOGIC CONTROL B

SIGNAL CONDITIONING/LOGIC CONTROL A

DIGITAL HYBRID CHANNEL A2 (-1ME1151)

ANALOG TEST HYBRID A2 (-1ME1152)

ANALOG SIGNAL CONDITIONING A2 (-1ME1153)

OUTPUT BUFFER A2 (-1ME1154)

INPUT BUFFER (-1ME1155)

POWER SUPPLY ELECTRONICS (-1ME1156)

CONTROLLER MTR PWR

POWER SUPPLY ELECTRONICS (CP-A)

OSCILLATOR SECTION (SPIRA 1A NORMAL)

TRANSFORMER

DUCK VOLTAGE CONTROLLER

POWER FAIL DETECTOR (-1ME1157)

POWER FAIL DETECTOR A

SYNCHRO OUTPUTS

ACCEL TEST DISC A

ACCEL TEST DISC B

DISC A STOP

DISC B ENABLE

DISC B STOP

TEST OSCILLATOR

BITE TEST COMPARATOR

FULL WAVE RECTIFIER

VOLTAGE REFERENCE

LOW ANALOG FUEL ANALOG

LOW ACCEL TEST FUEL ACCEL TEST

LOW FUEL

LOW ACCEL FUEL ACCEL

LOW PASS FILTER (LOWEST FREQUENCY)

HIGH PASS FILTER (HIGHEST FREQUENCY)

TELEMETRY BUFFER

RMS CONVERTER

FILTER

BYPASS/ DETECTOR

VIBRATION LIMIT EXCEEDED A2 BIT=1120

VIBRATION LIMIT EXCEEDED A2 BIT=1121

ADDRESS DECODER

TIMING AND CONTROL

TEST MUX COUNTER

CHANNEL SELECTOR

MUX MULTIPLEXER

DISC A BIT SELECT

DISC B BIT SELECT

DISC A BIT TEST

DISC B BIT TEST

DISC A BIT ENABLE

DISC A BIT STEP

DISC B BIT ENABLE

DISC B BIT STEP

DATA BIT 00 (DISC 1/2)

DATA BIT 01 (DISC 1/2)

DATA BIT 02 (DISC 1/2)

DISC A DATA INPUT BUS

DISC B DATA INPUT BUS

DB 00 - DB 15

DB 00 - DB 15

DB 00 - DB 15

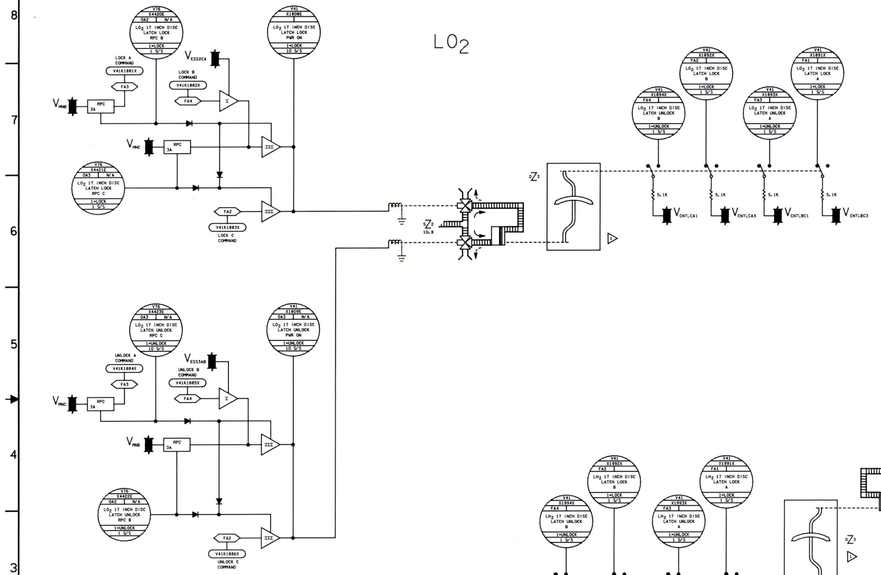

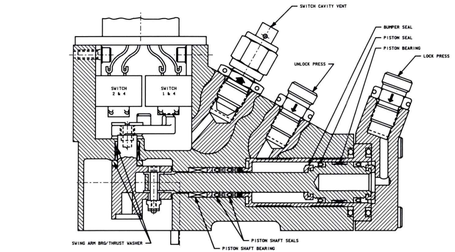

17-INCH DISCONNECT LATCH ACTUATOR ASSEMBLY

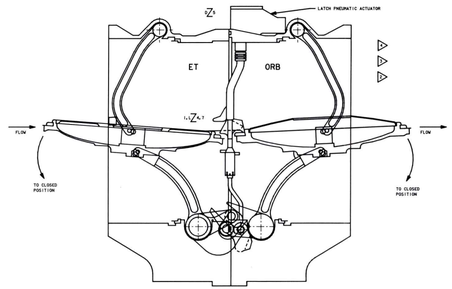

DISCONNECT LATCH

NOTES:

1. REFER TO TABLE 10.2.2 FOR VENDOR DRAWING REFERENCES

△ LO2 ET DISCONNECT VALVE SHOWN, LH2 ET DISCONNECT VALVE HAS AN ELLIPTICIAL DOME SIMILAR TO THE LH2 ORBITER DISCONNECT VALVE

△ TYPICAL FOR LO2 AND LH2 17 INCH DISCONNECT LATCH

△ PRELAUNCH OPERATION
- LATCH REMAINS IN THE UNLATCHED/UNLOCKED POSITION AND THE 17" DISCONNECT CLOSED FROM MATE UNTIL START OF CRYOGENIC LOADING. THE ONLY TIME THE 17" DISCONNECT IS OPENED AND LATCHED IS ON A GROUND BASIS FOR TESTING AND JUST PRIOR TO LOADING (REF SM1-V11.01)

LAUNCH OPERATION
- LATCH REMAINS IN LATCHED POSITION FROM T-0 TO ET SEPARATION

NOTE: LATCH IS INSIDE 17 INCH DISCONNECT VALVE BODY, FOR DETAIL SEE OVERVIEW DRAWING AT BOTTOM OF SHEET

15 DISC LAT

SIGNATURE	DATE	NATIONAL AERONAUTICS AND SPACE ADMINISTRATION
DESGN B. J. TEDDER JR.	1/7/88	LYNDON B. JOHNSON SPACE CENTER HOUSTON, TEXAS
DR		
CHKR R.A. SEQUEIRA		LO_2 AND LH_2 17-INCH DISCONNECT LATCH
CHKR	7/1/88	
APP	7/1/88	
APP	7/1/88	SPACE SHUTTLE DWG NO 10.15
ORIG/PLAN	8/1/88	ALL SHEET 1 OF 1
STA E	PCN	REV DATE

BASIC REV E

BASIC REV E

FOR DETAILED COMPONENT AND LOGIC INFORMATION REFER TO:

SSSH DWG NO.	SSSH DWG TITLE	VENDOR NAME	VENDOR DWG NO.	VENDOR SHEET NO.	REV	DATE	VENDOR DRAWING TITLE
10.1 SHEETS 1-4	MEC	AUTONETICS	10607-41		C	5-2-76	POWER SUPPLY
			15175-507			12-3-82	MEC
			15177-507			1-18-82	MODULE VII B
			15181-507			10-12-82	MODULE I
			15182-507			10-12-82	MODULE II, COMPARATOR
			15183-507			9-12-82	MODULE III, HEX DECODER
			15184-507			9-28-82	PIC
			15185-507			8-31-82	MODULE V
			15186-507			10-15-82	MODULE VI
			15187-507			11-5-82	MODULE VII A
		ROCKWELL	VS70-760502		L	7-17-87	EVCON SUBSYSTEM
			VS70-976099		A	12-7-87	INT. SYSTEM SCHEM.-ORBITER EPDC
		MSFC	MC450-0016				MEC SPECIFICATIONS
10.2 SHEETS 1-2	SRB	ROCKWELL	VS72-948099		A	10-29-87	SRB
		MSFC	10A95509C				SRB TVC
			13A10130		D	5-30-80	SRB TVC SUBSYSTEM DESCRIPTION
10.3	EIU	ROCKWELL	V070-730397		A	12-12-80	D&C, 017
			V070-773755			6-17-80	WIRE HARNESS ASSY, D&C
			VS70-720302		F	7-13-90	EIU DPS SUBSYSTEM
		CONRAC	7906744	1/1	A	6-19-81	EIU FAMILY TREE
			7906745	1/1	A	6-18-81	BLOCK DIAGRAM EIU (-011)
			7906743	1/1	A	6-17-81	INTERCONNECTION DIAGRAM, GPC I/F
			7906734	1/1	A	5-20-81	LOGIC DIAGRAM, GPC I/F (A1)
			7906742	1/2	C	9-8-81	LOGIC DIAGRAM, GPC I/F (A2)
			7906742	2/2	C	5-1-81	LOGIC DIAGRAM, GPC I/F (A2)
			7906748	1/2	A	5-1-81	BUILT IN TEST EQUIPMENT (A5)
			7906748	2/2	A	5-1-81	BUILT IN TEST EQUIPMENT (A5)
			7906746	1/2	A	5-1-81	OI BUFFER (A6)
			7906746	2/2	A	5-1-81	OI BUFFER (A6)
			7906747	1/2	B	3-17-82	OI CONTROLLER (A7)
			7906747	2/2	B	3-17-82	OI CONTROLLER (A7)
			7906749	1/2	C	4-22-82	CONTROLLER I/F (A8, A9, A10)
			7906749	2/2	C	4-22-82	CONTROLLER I/F (A8, A9, A10)
			7906750	1/2	C	3-25-83	STATUS BUFFER (A11, A12)
			7906750	2/2	C	3-25-83	STATUS BUFFER (A11, A12)
			7906751	1/1	D	4-23-82	POWER SUPPLY
10.4	ME BLK I CONTR	ROCKWELL	VS70-410142		G	4-25-84	MPS, SSME I/F SUBSYSTEM
		ROCKETDYNE	RSS-8502-1			1971	DESIGN DEFINITION REPORT
			RSS-8502-2			1971	DESIGN DEFINITION REPORT
			RSS-8628				
			D525401-04	PART I	H		
				PART II	AD		
			KD BM15000		T		
		HONEYWELL	ES25624-01		L	7-19-82	ACCEPTANCE TEST FOR POWER SUPPLY
			ES24693-04		R	10-12-73	INPUT ELECTRONICS PRESSURE CARD ASSY
			ES25603-01		C	1-12-82	IE BOARDS 1A, 1B
			ES25603-02		C	1-12-82	IE BOARDS 2A, 2B
			ES25603-07		C	11-23-81	IE BOARDS 7A, 7B
			ES25604-01		C	1-12-82	CIE BOARD 1
			ES25604-02		A	1-12-82	CIE BOARD 2
			ES25604-03		A	1-12-82	CIE BOARD 3
			ES25604-04		E	1-26-83	CIE BOARD 4
			ES25604-05		A	1-12-82	CIE BOARD 5
			ES25604-06		A	1-12-82	CIE BOARD 6
			ES25604-07		A	1-12-82	CIE BOARD 7A, 7C
			ES25604-17		A	1-12-82	CIE BOARD 7B
			ES25605-01		D	1-12-82	OE BOARD 1A
			ES25605-02		C	9-19-78	OE BOARD 2A
			ES25605-03		D	1-12-82	OE BOARD 3A
			ES25605-04		N	12-14-82	OE BOARD 4A, 4B, 5A, 5B
			ES25605-06		C	9-7-78	OE CIRCUIT CARD ASSY NO. 6
			ES25605-07		P	12-12-82	OE BOARDS 7A, 7B
			ES25605-11		D	1-12-82	OE BOARD 1B
			ES25605-12		C	9-19-78	OE BOARD 2B
			ES25605-13		D	1-12-82	OE BOARD 3B
			ES25605-14			3-22-78	OE BOARD 4A, 4B, 5A, 5B
			ES25605-17			3-22-78	OE BOARD 7A, 7B7

DWG	SIGNATURE	DATE	DWG	SIGNATURE	DATE
10.1	ENGR M. B. SHIFFLETT			ENGR	
	ENGR Bud Hill	9-6-90		ENGR	
10.2	ENGR R. E. HAZLE			ENGR	
	ENGR R E Hazle	9-6-90		ENGR	
10.3	ENGR R. J. HALYARD			APP Thomas W. Kirkatrick	9/6/90
	ENGR R J Halyard	9-6-90		APP John A Kammerer	9/6/90
10.4	ENGR M. R. JENKIN			OMNIPLAN	
	ENGR Mark Jenkin	9-6-90		ITT PCN	

NATIONAL AERONAUTICS AND SPACE ADMINISTRATION
LYNDON B. JOHNSON SPACE CENTER HOUSTON, TEXAS

VENDOR DRAWING REFERENCES

SPACE SHUTTLE	TBL NO 10-II
ALL	PAGE 10.II-1 SHEET 1 OF 5

BASIC REV E

FOR DETAILED COMPONENT AND LOGIC INFORMATION REFER TO:

SSSH DWG NO.	SSSH DWG TITLE	VENDOR NAME	VENDOR DWG NO.	VENDOR SHEET NO.	REV	DATE	VENDOR DRAWING TITLE
10.4 (CONT)		HONEYWELL	C13747AF31	38	D	4-25-78	INPUT ELECTRONICS
			C13747AF41	48	F	10-29-78	INPUT ELECTRONICS
			C13747AF51		D	2-23-78	COMPUTER I/F ELECTRONICS
			C13747AF57		A	1-20-78	COMPUTER I/F ELECTRONICS
			C13747AF67		A	1-20-78	COMPUTER I/F ELECTRONICS
			C13747AF01		E	5-23-78	POWER SUPPLY ASSEMBLY
			C13747AF02		C	11-17-77	POWER SUPPLY ASSEMBLY
			C13747AF51	70, 71, 73, 74, 76, 77, 80, 81, 83, 8			OUTPUT ELECTRONICS BOARDS
		HONEYWELL	C13759AF01	32	E	8-23-78	CONTROLLER ASSEMBLY
			10056061		A		FILTER & CONNECTOR ASSEMBLY
			10056063		B	10-12-78	FILTER SUBASSEMBLY
			10060061	66	B	1-26-78	INPUT ELECTRONICS
			34027816			3-10-77	CONTROLLER BOARDS
			34027819			3-4-77	CONTROLLER BOARDS
			34027822			3-10-77	CONTROLLER BOARDS
			34027825		A	6-6-78	CONTROLLER BOARDS
			34027828			3-10-77	CONTROLLER BOARDS
			34027831		A	6-7-78	CONTROLLER BOARDS
			34027834			3-4-77	INTERRUPT BOARD
			34027813				POWER SUPPLY BOARDS
			34027804		C	8-14-78	WORD ELECTRONICS
			34027837		A	6-2-77	SENSE DIGIT ELECTRONICS
			34022712		E	11-18-78	SENSE DIGIT ELECTRONICS
			34027807		A	7-15-77	PARITY BOARD
			34027810		F	11-14-78	MEMORY TIMING
10.5	ME BLK I CIE	ROCKWELL	VS70-720302		F	7-13-90	EIU DPS SUBSYSTEM
		HONEYWELL	C13759AF01	1	L	6-13-83	COVER SHEET
				2	K	7-16-82	POWER GENERATION-CHANNEL A
				3	K	7-16-82	POWER GENERATION-CHANNEL B
				4	K	7-16-82	POWER GENERATION-CHANNEL A
				5	K	7-16-82	POWER GENERATION-CHANNEL B
				16	K	7-16-82	I/F BUFFERS
				17	K	7-16-82	VEEI COMMAND INPUT CHANNEL
				18	K	7-16-82	VEEI RECORDER DATA CHANNEL
				19	K	7-16-82	CIE OUTRPUT BUFFERS
				20	K	7-16-82	DIO MUX - OE INPUTS-CHANNEL
				21	K	7-16-82	DIO MUX - OE INPUTS - CHANNEL B
				22	K	7-16-82	DIDO MUX - CIE INPUTS - CHANNEL A
				23	K	7-16-82	DIO MUX - CIE INPUT - CHANNEL B
				24	K	7-16-82	OUTPUT SWITCH, REGISTERS - CHANNEL A
				25	K	7-16-82	OUTPUT SWITCH, REGISTERS - CHANNEL B
			C13747AF51		D	2-23-78	CIE 1
			C13747AF52		B	6-14-77	CIE 2
			C13747AF53		C	4-12-77	CIE 3
			C13747AF54	1	C	10-25-77	CIE 4
				2	B	4-25-77	CIE 4
			C13747AF55			2-5-77	CIE 5
			C13747AF56		A	9-20-77	CIE 6
			C13747AF57		A	1-20-78	CIE 7A, 7C
			C13747AF67		A	1-20-78	CIE 7B
			10060062		B	1-26-78	SSME CONTROLLER ASSY - CIE
			10060064		B	1-26-78	SSME CONTROLLER ASSY - 0E
10.6	ME BLK I IE	HONEYWELL	10060061	8-16			INPUT ELECTRONICS
10.7	ME BLK I OE	HONEYWELL	10060064	24-30			OUTPUT ELECTRONICS

DWG	SIGNATURE	DATE	DWG	SIGNATURE	DATE
10.4	ENGR M. R. JENKINS			ENGR	
	ENGR Mark Jenkins	9-6-90		ENGR	
10.5	ENGR J. D. REDING			ENGR	
	ENGR Jan D Reding	9-6-90		ENGR	
10.6	ENGR J. M. DINGLER			APP Thomas W. Kristoff	9/6/90
	ENGR J M Dingler	9-6-90		APP John A Kamman	9/6/90
10.7	ENGR R. J. HALYARD			OMNIPLAN	
	ENGR R J Halyard	9-6-90		R E / PCN	

NATIONAL AERONAUTICS AND SPACE ADMINISTRATION
LYNDON B. JOHNSON SPACE CENTER HOUSTON, TEXAS

VENDOR DRAWING REFERENCES

SPACE SHUTTLE	TBL NO 10-II
ALL	
	PAGE 10.II-2 / SHEET 2 OF 5

BASIC REV E

FOR DETAILED COMPONENT AND LOGIC INFORMATION REFER TO:

SSSH DWG NO.	SSSH DWG TITLE	VENDOR NAME	VENDOR DWG NO.	VENDOR SHEET NO.	REV	DATE	VENDOR DRAWING TITLE
10.8	MPS HE	ROCKWELL	VS70-410139	1-4	E	5-12-89	MPS HELIUM SUBSYSTEM
			VS70-410159	2	E	5-3-89	MPS PANEL I/F SUBSYSTEM
			VS70-415008	1		8-2-84	MPS HELIUM
			VS72-941099	24-29	A/B15	3-23-90	HELIUM VALVES
			VS70-415004	1			MPS SYS
			V070-415771				HELIUM INSTALL
			V070-415772				HELIUM INSTALL
		JSC	JSC-16983		B		OI MDM/DSC FAILURE IMPACTS
			51-L				51-L MML
10.9	ME H&P	ROCKETDYNE				11-1-84	SSME COURSE NO. ME 110(A) RIR
10.10	ET	ROCKWELL	VS70-760502	8	L	7-17-87	EVCON SUBSYSTEM
			VS72-941102	24	J/11	3-23-90	LH_2/LO_2 MANIFOLD REPRESS
			VS72-941102	25	J	4-25-88	HELIUM BLOWDOWN & XOVER VALVES
			VS72-941102	26	J	4-25-88	RTLS LH_2 REPRESS
10.11	LO_2	ROCKWELL	VS70-410119	3-6	D	12-18-89	MPS FEED, RECIRC, & POGO
			VS70-410129	1-3	F	11-16-89	MPS FILL, RLF & ET DSC
			VS70-410139	4	E	5-12-89	MPS HELIUM
			VS70-410159	1	E	5-3-89	MPS PANEL I/F
			VS72-941099	10-12	A/B15	3-23-90	LO_2 PREVALVES
			VS72-941099	13	A/B15	3-23-90	LH_2 RECIRCULATION
			VS72-941099	14	A/B15	3-23-90	LO_2 OVERBOARD BLEED & POGO
			VS72-941099	17	A/B15	3-23-90	LO_2 INBOARD F/D
			VS72-941099	19	A/B15	3-23-90	LO_2 RLF SHUTOFF VALVE
			VS72-941099	21	A/B15	3-23-90	LO_2 TANK FEED DSC
			VS72-941099	30	A/B15	3-23-90	LH_2/LO_2 MANIFOLD REPRESS
			VS72-941099	31	A/B15	3-23-90	HELIUM BLOWDOWN & XOVER
			VS72-941099	34	A/B15	3-23-90	ECO SENSOR ELECTRONICS
			VS72-941099	42	A/B15	3-23-90	PANEL I/F: LH_2/LO_2 MANIFOLD
10.12	LH_2	ROCKWELL	VS70-410112		F	11-16-84	MPS FEED, RECIRC & POGO
			VS70-410122		H	4-23-87	MPS FILL, RLF & ET DSC
			VS70-410132		G	8-16-84	MPS HELIUM
10.13	ME	ROCKWELL	VS70-410159	1-5	E	5-3-89	MPS PANEL I/F
			VS72-941099	55, 74, 90	A/B15	3-23-90	ME SHUTDOWN & STATUS LIGHTS
		MSFC	ICD-13M15000		U		VEHICLE/ME ICD
		JSC	51-L				51-L MML

DWG	SIGNATURE	DATE	DWG	SIGNATURE	DATE
10.8	ENGR J. D. CALHOUN		10.12	ENGR M. A. SEQUEIRA	
	ENGR J. D. Calhoun	9-6-90		ENGR Miguel Sequeira	9-6-90
10.9	ENGR J. M. DINGLER		10.13	ENGR J. D. REDING	
	ENGR Jon Dingler	9-6-90		ENGR Jon D. Reding	9-6-90
10.10	ENGR M. B. SHIFFLETT			APP Thomas W. Kowalski	9/6/90
	ENGR Buck Shifflett	9-6-90		APP John A Kammerer	9/6/90
10.11	ENGR K. J. DWYER II			OMNIPLAN	
	ENGR K J Dwyer	9-6-90		LTR E	PCN

NATIONAL AERONAUTICS AND SPACE ADMINISTRATION
LYNDON B. JOHNSON SPACE CENTER HOUSTON, TEXAS

VENDOR DRAWING REFERENCES

SPACE SHUTTLE	TBL NO 10-II
ALL	
	PAGE 10.II-3 SHEET 3 OF 5

BASIC REV E

FOR DETAILED COMPONENT AND LOGIC INFORMATION REFER TO:

SSSH DWG NO.	SSSH DWG TITLE	VENDOR NAME	VENDOR DWG NO.	VENDOR SHEET NO.	REV	DATE	VENDOR DRAWING TITLE
10.14	ME BLK I FASCOS	AUTONETICS	10059-401				POWER SUPPLY
			10090-516				DIGITAL BITE
			10091-516				ANALOG BITE
			10092-516				SIGNAL CONDITIONER #1
			10093-516				SIGNAL CONDITIONER #2
			10192-401				POWER SUPPLY
			13667-507				CONTROLLER, FASCOS
			13671-507				DIGITAL/ANALOG BITE CONTROL
			13696-507				NETWORK, SIGNAL CONDITIONER
			13697-507				SIGNAL CONDITIONER/LOGIC CONTROL
			14051-507				CONTROLLER, FASCOS
			14178-507				CONTROLLER, FASCOS
			14179-507				SIGNAL CONDITIONER/LOGIC CONTROL
		ROCKWELL	VS72-941099	69.1, 85.1 & 101.1	A/B15	3-23-90	FASCO
		JSC	51-L				51-L MML
10.15	LATCH	ROCKWELL	VS70-410129	1-5	F	11-16-89	MPS FILL, RLF, & ET DSC
10.16	ME BLK II CONTR						
10.17	ME BLK II DCU						
10.18	ME BLK II CIE						
10.19	ME BLK II IE/FASCOS						

DWG	SIGNATURE	DATE	DWG	SIGNATURE	DATE
10.14	ENGR K. J. DWYER		10.18	ENGR T. L. STOWE	
	ENGR K J Dwyer	9-6-90		ENGR Terri L. Stowe	9/6/90
10.15	ENGR M. A. SEQUEIRA		10.19	ENGR M. R. JENKINS	
	ENGR Miguel Sequeira	9-6-90		ENGR Mark Jenkins	9-6-90
10.16	ENGR F.S. MARKEE			APP Thomas W. Kraehl	9/6/90
	ENGR Franklin S. Markee IV	9-6-90		APP John A Kammann	9/6/90
10.17	ENGR T. L. STOWE			OMNIPLAN	
	ENGR Terri L. Stowe	9/6/90		LTR E PCN	

NATIONAL AERONAUTICS AND SPACE ADMINISTRATION
LYNDON B. JOHNSON SPACE CENTER HOUSTON, TEXAS

VENDOR DRAWING REFERENCES

SPACE SHUTTLE ALL | TBL NO 10-II | PAGE 10.II-4 | SHEET 4 OF 5

BASIC REV E

FOR DETAILED COMPONENT AND LOGIC INFORMATION REFER TO:

SSSH DWG NO.	SSSH DWG TITLE	VENDOR NAME	VENDOR DWG NO.	VENDOR SHEET NO.	REV	DATE	VENDOR DRAWING TITLE
10.20	ME BLK II OE						

DWG	SIGNATURE	DATE	DWG	SIGNATURE	DATE
10.20	ENGR F. S. MARKLE			ENGR	
	ENGR Frank J. Markle for	9-6-90		ENGR	
	ENGR			ENGR	
	ENGR			ENGR	
	ENGR			APP Thomas W. Knistler	9/6/90
	ENGR			APP John A Kamman	9/6/90
	ENGR			OMNIPLAN	
	ENGR			LTR E PCN	

NATIONAL AERONAUTICS AND SPACE ADMINISTRATION
LYNDON B. JOHNSON SPACE CENTER HOUSTON, TEXAS

VENDOR DRAWING REFERENCES

SPACE SHUTTLE ALL

TBL NO 10-II

BASIC REV E

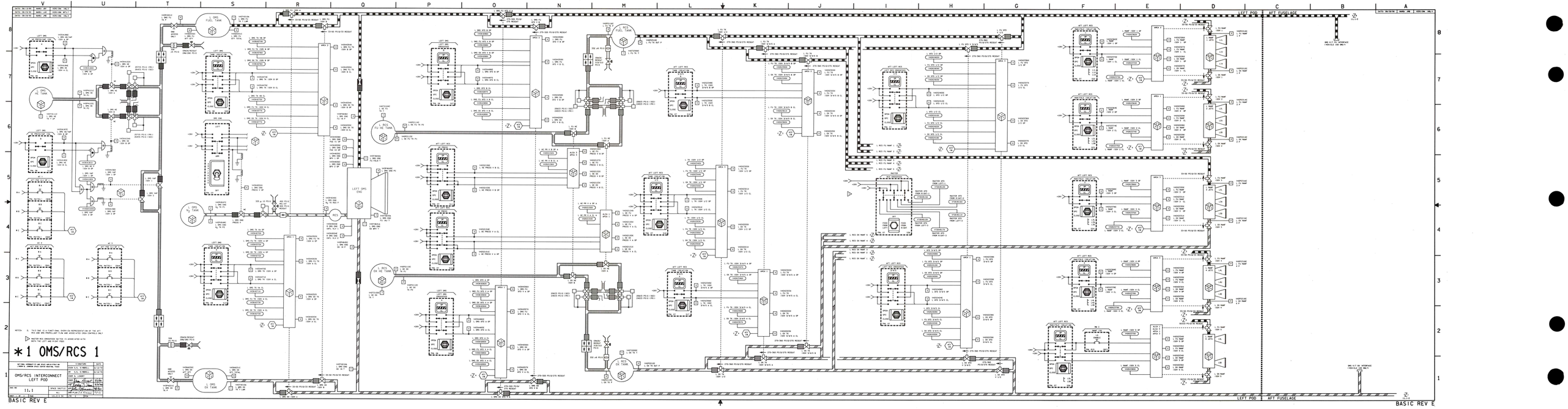
*1 OMS/RCS 1
OMS/RCS - INTERCONNECT
LEFT POD
11.1
LEFT POD
AFT FUSELAGE
BASIC REV E

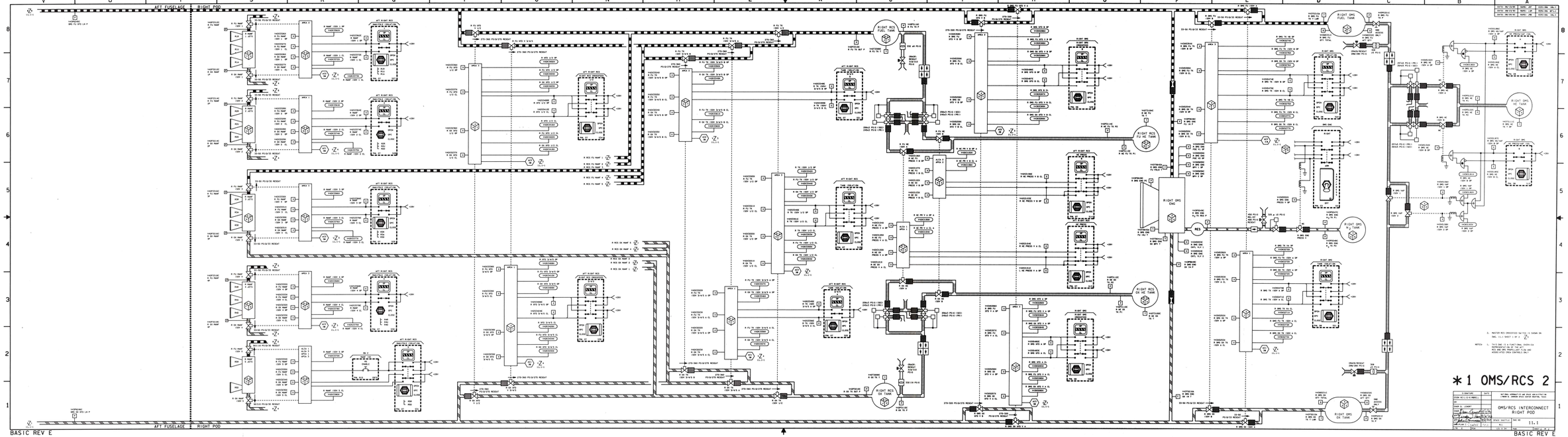
AFT FUSELAGE
RIGHT POD
BASIC REV E
RIGHT RCS FUEL TANK
RIGHT RCS FU HE TANK
RIGHT RCS OX HE TANK
RIGHT RCS OX TANK
RIGHT OMS FUEL TANK
RIGHT OMS OX TANK
RIGHT OMS ENG
RIGHT OMS N2 TANK
RIGHT OMS HE TANK
RES
*1 OMS/RCS 2
OMS/RCS INTERCONNECT
RIGHT POD
11.1

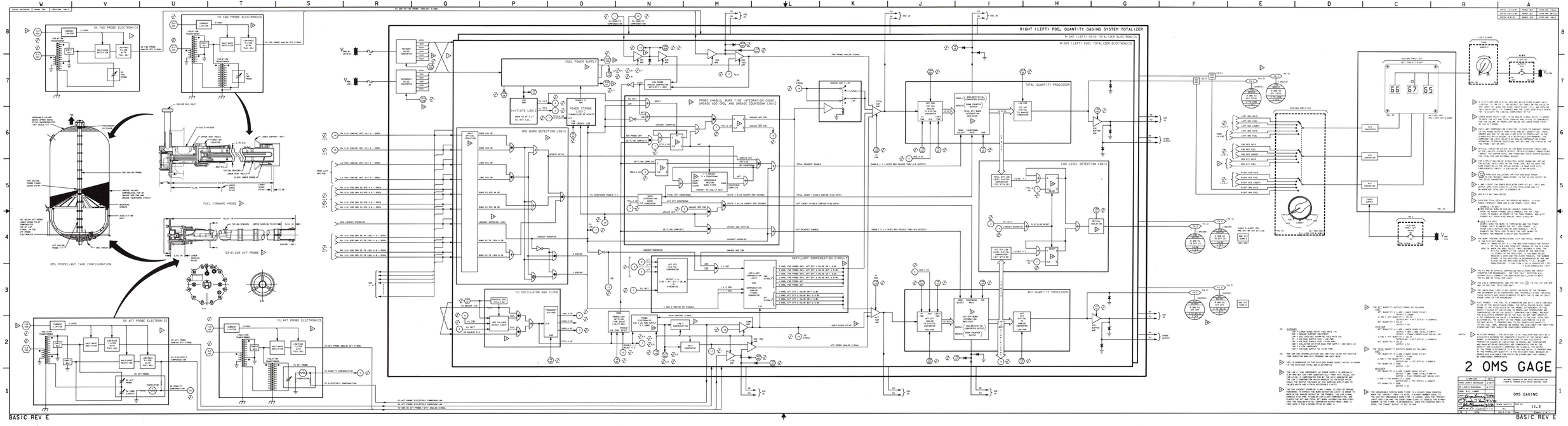
RIGHT (LEFT) POD, QUANTITY GAGING SYSTEM TOTALIZER
RIGHT (LEFT) OMS TOTALIZER ELECTRONICS
RIGHT (LEFT) FUEL TOTALIZER ELECTRONICS
OX FWD PROBE ELECTRONICS
FU FWD PROBE ELECTRONICS
OX AFT PROBE ELECTRONICS
FU AFT PROBE ELECTRONICS
FUEL POWER SUPPLY
POWER STROBE LOGIC
INITIATE LOGIC
PROBE ENABLE, BURN TIME INTEGRATION COUNT, UNGAGE ADD CMD, AND UNGAGE COUNTDOWN LOGIC
OMS BURN DETECTION LOGIC
FU OSCILLATOR AND CLOCK
CAPILLARY COMPENSATION CIRCUIT
TOTAL QUANTITY PROCESSOR
AFT QUANTITY PROCESSOR
LOW LEVEL DETECTION LOGIC
OMS PROPELLANT TANK CONFIGURATION
FUEL FORWARD PROBE
OXIDIZER AFT PROBE
2 OMS GAGE
OMS GAGING
11.2
BASIC REV E

DATE: 11/21/86	NAME: MAG	VERSION: BPT 7
DATE: 12/2/86	NAME: MAG	VERSION: BPT 8
DATE: 06/27/90	NAME: JMB	VERSION: IMP 3

	LEFT	RIGHT
OMS ARM CMD 1	V43S4572X	V43S5572X
OMS ARM CMD 2	V43S4573X	V43S5573X
OMS ARM/PRESS CMD 1	V43S4570X	V43S5570X
OMS ARM/PRESS CMD 2	V43S4571X	V43S5571X
OMS VLV PWR ENA 1	V43S4574X	V43S5574X
OMS V1C1	V43K4583X	V43K5583X
OMS V1C2	V43K4584X	V43K5584X
OMS V2C1	V43K4585X	V43K5585X
OMS V2C2	V43K4586X	V43K5586X
BFS ARM/PRESS	V98X0723X	V98X0724X
BFS ARM	V98X0726X	V98X0727X
ARM/PRESS SW DIS	V90X7043X	V90X7045X
ARM SW DIS	V90X7042X	V90X7044X

LCA'S NO 1 AND 2-LEFT OMS

LCA'S NO 1 AND 3-RIGHT OMS

OMS ENG LEFT

OMS ENG RIGHT

L OMS ENG VLV

R OMS ENG VLV

ARM/PRESS

ARM

OFF

ON

PNL C3

PNL O14F

PNL O15F

$V_{CNTLAB1}$ $V_{CNTLAB2}$ $V_{CNTLCA1}$ $V_{CNTLCA2}$ 1A

FA 1 FA 2 FA 3 FA 4

GA 1 GA 3

V_{MNCA1} ALCSY 11 5A

V_{MNAB1} ALCSY 21 5A

V_{MNCA3} ALCSY 31 3A

V_{MNAB3} ALCSY 41 3A

V_{MNCA1} ALCSY 12 3A

V_{MNAB1} ALCSY 22 3A

V_{MNCA3} ALCSY 32 3A

V_{MNAB3} ALCSY 42 3A

17 Z_4 OMS ENG PRESS V COIL 1 11.3-2

16 Z_4 OMS ENG PRESS V COIL 2 11.3-2

11 Z_4 OMS ENG CNT V1 COIL 1 11.3-2

10 Z_3 OMS ENG CNT V2 COIL 1 11.3-2

15 Z_4 OMS ENG CNT V1 COIL 2 11.3-2

12 Z_3 OMS ENG CNT V2 COIL 2 11.3-2

V1C1 V2C1 V1C2 V2C2

V43K4583X V43K4584X V43K4585X V43K4586X V43K5583X V43K5584X V43K5585X V43K5586X

△ BOTH VALVES Y1 AND Y2 REQUIRED TO FIRE OMS ENGINE, COIL 1 OR COIL 2 WILL OPEN ENGINE VALVE

NOTES: △ THE SAMPLE RATE IS 1 S/S IN OPS 1

* 3 OMS 1

NATIONAL AERONAUTICS AND SPACE ADMINISTRATION LYNDON B. JOHNSON SPACE CENTER HOUSTON, TEXAS		SIGNATURE	DATE
	DSGN	VICKI S. HUNTER	8/8/83
OMS/DRIVERS	DR	VICKI S. HUNTER	8/8/83
	CHCK	ROBBIE D. GEST	9/21/90
	CHCK	Robbie D. Gest 9/4/92	
	CHCK	Linda Hall 9/4/92	
	APPD	Mark Hammon 9/7/92	
	SHIPLAN	S. Fowler 9.8.92	

DWG NO 11.3	SPACE SHUTTLE	SIZE	
	ALL	D	
SHEET 1 OF 2	PAGE 66 X 34	LTR E	FOR

BASIC REV E

MCA LOGIC

MCA POWER ACC 3Φ

AFT 1 / AFT 2 / AFT 3

PNL MA73D-D CB4 / CB10 / CB14

V_{AC1} V_{AC2} V_{AC3} 3Φ

$V_{CNTLAB3}$ $V_{CNTLBC3}$ $V_{CNTLCA3}$ 1.2K

V_{MNA} APC4 V_{MNB} APC5 V_{MNC} APC6

RPC 5A

AFT POD VLV OP 1 BA / OP 1 BB / OP 1 BC — PNL MA73D-I CB38 / CB39 / CB40

AFT POD VLV OP 2 BA / OP 2 BB / OP 2 BC — PNL MA73D-I CB41 / CB42 / CB43

AFT POD VLV OP 3 BA / OP 3 BB / OP 3 BC — PNL MA73D-I CB44 / CB45 / CB46

AFT POD VLV LOGIC OP 1/3 — PNL MA73D-I S10

AFT POD VLV LOGIC OP 1/2 — PNL MA73D-I S16

AFT POD VLV LOGIC OP 2/3 — PNL MA73D-I S17

AFT POD VLV LOGIC OP 1/3 — PNL MA73D-B S14

AMC1

AMC2

AMC3

V_{AC1} AMC1 — 3Φ AC MTR PWR

V_{MNA} AMC1 — AFT MCA1 OPER STATUS POWER

$V_{MNA/B}$ POD/AMC1 — MNA/MNB OMS/RCS RELAY LOGIC POWER

V_{AC1} POD/AMC1 — AC1 3Φ OMS/RCS MOTOR VALVE POWER

V_{AC2} AMC2 — 3Φ AC MTR PWR

V_{MNB} AMC2 — AFT MCA2 OPER STATUS POWER

$V_{MNB/C}$ POD/AMC2 — MNB/MNC OMS/RCS RELAY LOGIC POWER

V_{AC2} POD/AMC2 — AC2 3Φ OMS/RCS MOTOR VLV POWER

V_{AC3} POD/AMC3 — AC3 3Φ OMS/RCS MOTOR VALVE POWER

$V_{MNC/A}$ POD/AMC3 — MNC/MNA OMS/RCS RELAY LOGIC POWER

V_{MNC} AMC3 — AFT MCA3 OPER STATUS POWER

V_{AC3} AMC3 — 3Φ AC MOTOR POWER

BASIC REV E

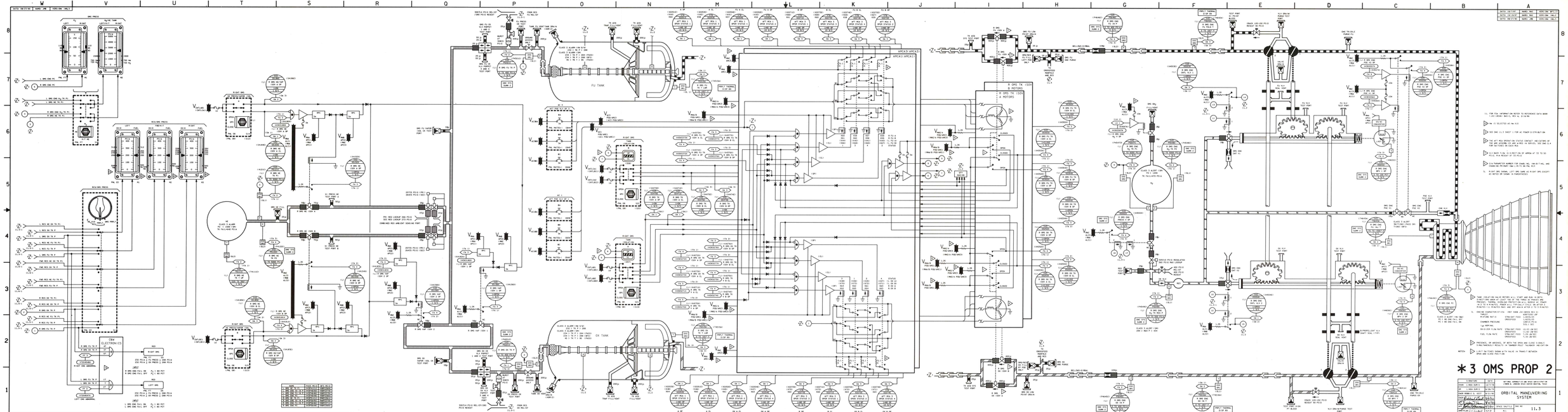
*3 OMS PROP 2
ORBITAL MANEUVERING SYSTEM
11.3
BASIC REV E
BASIC REV E

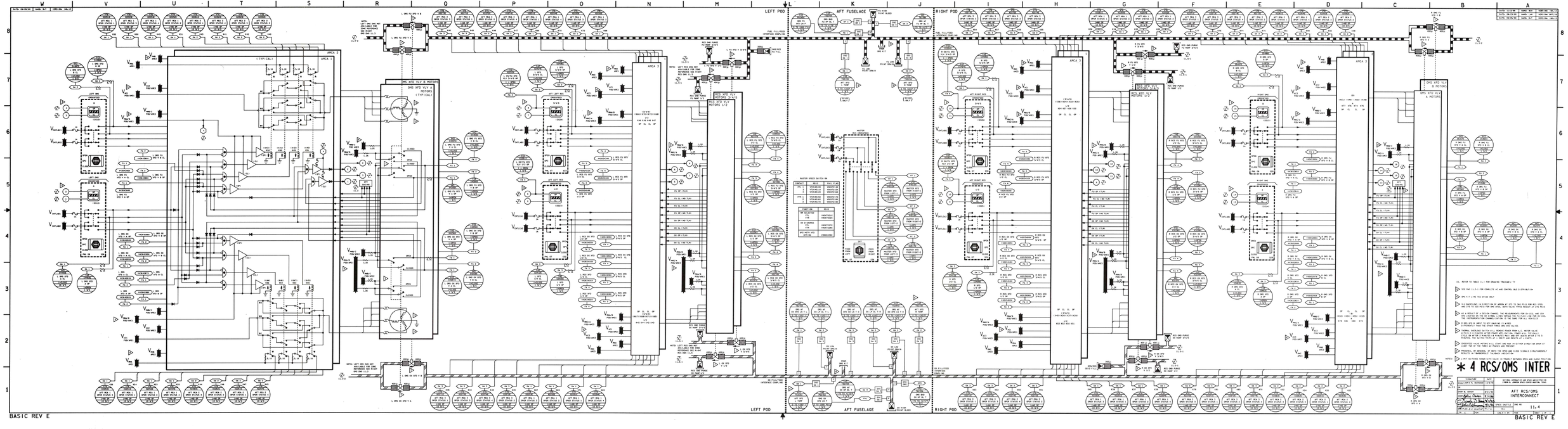

* 4 RCS/OMS INTER

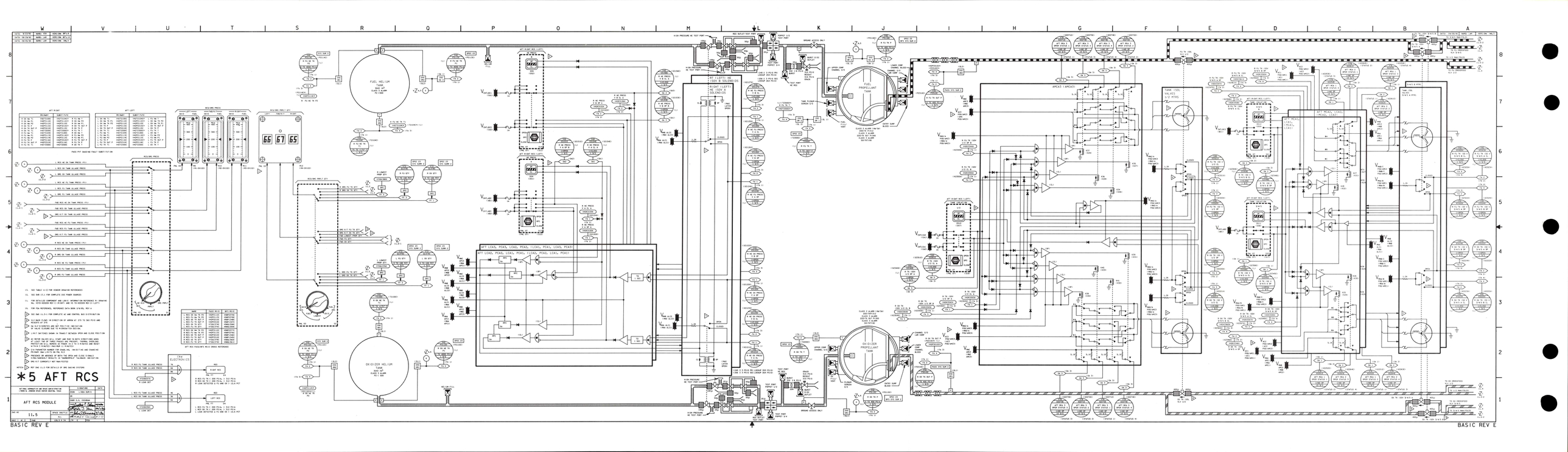

*5 AFT RCS
AFT RCS MODULE
11.5
BASIC REV E
FUEL HELIUM TANK
OXIDIZER HELIUM TANK
FUEL PROPELLANT TANK
OXIDIZER PROPELLANT TANK
AFT LCA3, PCA3, LCA2, PCA2, (LCA1, PCA1, LCA3, PCA3)
AFT LCA2, PCA2, LCA1, PCA1, (LCA2, PCA2, LCA1, PCA1)
AMCA3 (AMCA3)
TANK TOOL VALVES 1/2 MTRS
AFT RIGHT
AFT LEFT
BASIC REV E

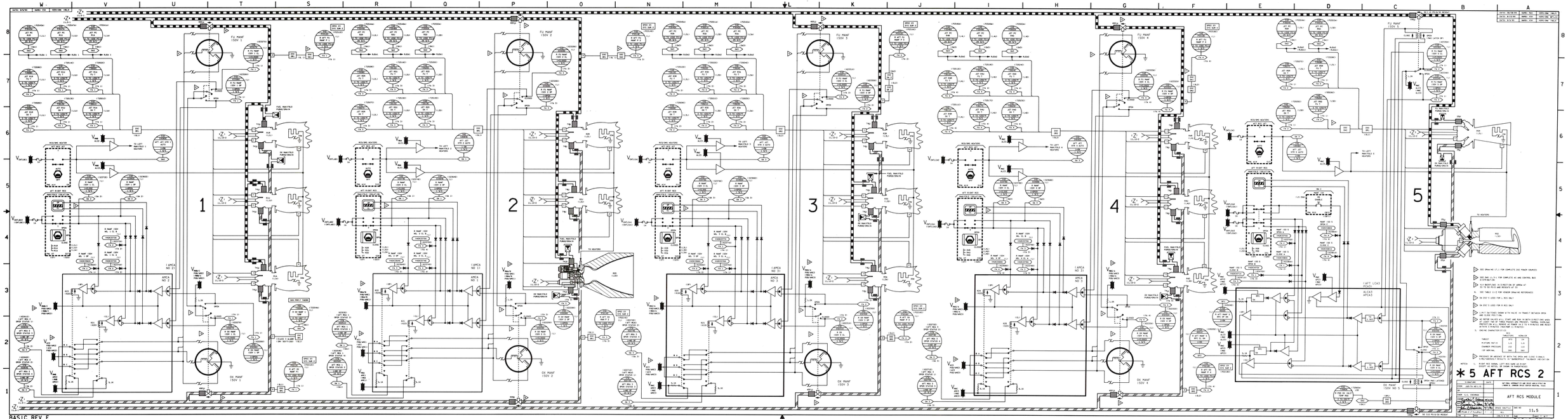

1
2
3
4
5
FU MANF 150V 1
FU MANF 150V 2
FU MANF 150V 3
FU MANF 150V 4
FU MANF 150V 5
OX MANF 150V 1
OX MANF 150V 2
OX MANF 150V 3
OX MANF 150V 4
OX MANF 150V 5
LAMCA NO 21
LAMCA NO 11
LAMCA NO 31
AMCA NO 2
AMCA NO 1
AMCA NO 3
AFT LCA3
ALCA3
AFCA3
BASIC REV E
*5 AFT RCS 2
AFT RCS MODULE
11.5

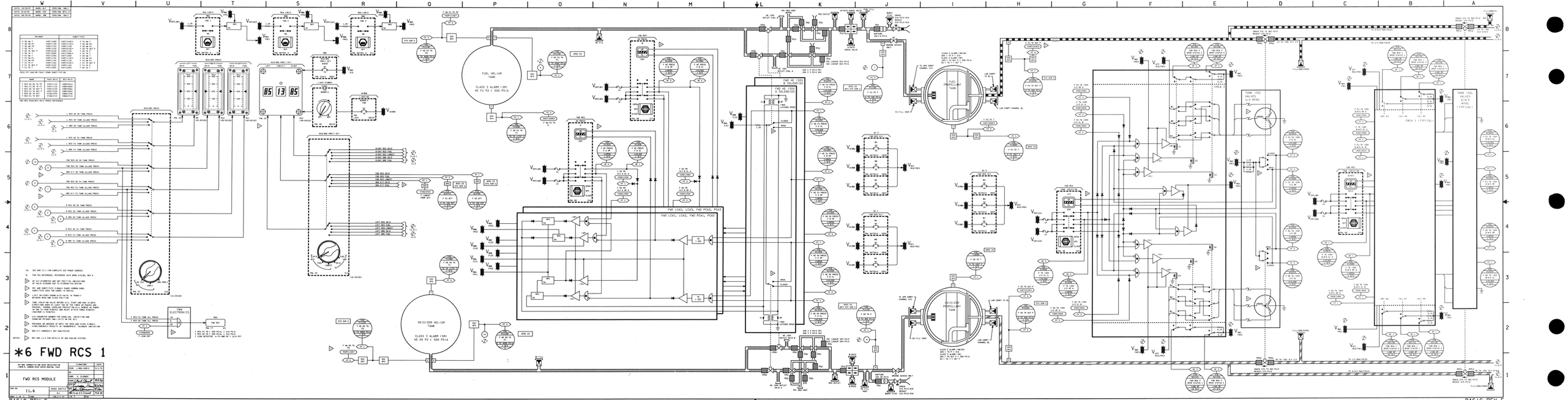
*6 FWD RCS 1
FWD RCS MODULE
11.6
BASIC REV E
FWD HE ISOV A SOLENOIDS
FWD HE ISOV B SOLENOIDS
FUEL HELIUM TANK
CLASS 3 ALARM I SMI
HE FU P2 < 500 PSIA
OXIDIZER HELIUM TANK
CLASS 3 ALARM I SMI
HE OX P2 < 500 PSIA
FUEL PROPELLANT TANK
OXIDIZER PROPELLANT TANK
FWD RCS
FWD LCA1, LCA2, FWD PCA1, PCA2
TANK ISOL VALVES 3/4" MTRS
FMCA 1 (TYP-CAL)
FMCA 2
RCS/RMS PRESS
LEFT PROP QTY
RIGHT PROP QTY
CRAY ELECTRONICS
FWD RCS
SPEC 33
SPEC 41
SPEC 45
SPEC 46
SPEC 47
SPEC 51
SPEC 52
SPEC 53
SPEC 54
SPEC 55
SPEC 56
SPEC 57
SPEC 58
SPEC 59
SPEC 60
SPEC 61
SPEC 62
SPEC 63
SPEC 64
SPEC 65
SPEC 66
SPEC 67
SPEC 68
SPEC 69
SPEC 70
SPEC 71
SPEC 72
SPEC 73
SPEC 74
SPEC 75
SPEC 76
SPEC 77
SPEC 78
SPEC 79
SPEC 80
SPEC 81
SPEC 82
SPEC 83
SPEC 84
SPEC 85
SPEC 86
SPEC 87
SPEC 88
SPEC 89
SPEC 90
SPEC 91
SPEC 92
SPEC 93
SPEC 94
SPEC 95
SPEC 96
SPEC 97
SPEC 98
SPEC 99
SPEC 100
SPEC 101
SPEC 102
SPEC 103
SPEC 104
SPEC 105
SPEC 106
SPEC 107
SPEC 108
SPEC 109
SPEC 110
SPEC 111
SPEC 112
SPEC 113
SPEC 114
SPEC 115
SPEC 116
SPEC 117
SPEC 118
SPEC 119
SPEC 120
SPEC 121
SPEC 122
SPEC 123
SPEC 124
SPEC 125
SPEC 126
SPEC 127
SPEC 128
SPEC 129
SPEC 130
SPEC 131
SPEC 132
SPEC 133
SPEC 134
SPEC 135
SPEC 136
SPEC 137
SPEC 138
SPEC 139
SPEC 140
SPEC 141
SPEC 142
SPEC 143
SPEC 144
SPEC 145
SPEC 146
SPEC 147
SPEC 148
SPEC 149
SPEC 150
SPEC 151
SPEC 152
SPEC 153
SPEC 154
SPEC 155
SPEC 156
SPEC 157
SPEC 158
SPEC 159
SPEC 160
SPEC 161
SPEC 162
SPEC 163
SPEC 164
SPEC 165
SPEC 166
SPEC 167
SPEC 168
SPEC 169
SPEC 170
SPEC 171
SPEC 172
SPEC 173
SPEC 174
SPEC 175
SPEC 176
SPEC 177
SPEC 178
SPEC 179
SPEC 180
SPEC 181
SPEC 182
SPEC 183
SPEC 184
SPEC 185
SPEC 186
SPEC 187
SPEC 188
SPEC 189
SPEC 190
SPEC 191
SPEC 192
SPEC 193
SPEC 194
SPEC 195
SPEC 196
SPEC 197
SPEC 198
SPEC 199
SPEC 200
SPEC 201
SPEC 202
SPEC 203
SPEC 204
SPEC 205
SPEC 206
SPEC 207
SPEC 208
SPEC 209
SPEC 210
SPEC 211
SPEC 212
SPEC 213
SPEC 214
SPEC 215
SPEC 216
SPEC 217
SPEC 218
SPEC 219
SPEC 220
SPEC 221
SPEC 222
SPEC 223
SPEC 224
SPEC 225
SPEC 226
SPEC 227
SPEC 228
SPEC 229
SPEC 230
SPEC 231
SPEC 232
SPEC 233
SPEC 234
SPEC 235
SPEC 236
SPEC 237
SPEC 238
SPEC 239
SPEC 240
SPEC 241
SPEC 242
SPEC 243
SPEC 244
SPEC 245
SPEC 246
SPEC 247
SPEC 248
SPEC 249
SPEC 250
SPEC 251
SPEC 252
SPEC 253
SPEC 254
SPEC 255
SPEC 256
SPEC 257
SPEC 258
SPEC 259
SPEC 260
SPEC 261
SPEC 262
SPEC 263
SPEC 264
SPEC 265
SPEC 266
SPEC 267
SPEC 268
SPEC 269
SPEC 270
SPEC 271
SPEC 272
SPEC 273
SPEC 274
SPEC 275
SPEC 276
SPEC 277
SPEC 278
SPEC 279
SPEC 280
SPEC 281
SPEC 282
SPEC 283
SPEC 284
SPEC 285
SPEC 286
SPEC 287
SPEC 288
SPEC 289
SPEC 290
SPEC 291
SPEC 292
SPEC 293
SPEC 294
SPEC 295
SPEC 296
SPEC 297
SPEC 298
SPEC 299
SPEC 300
SPEC 301
SPEC 302
SPEC 303
SPEC 304
SPEC 305
SPEC 306
SPEC 307
SPEC 308
SPEC 309
SPEC 310
SPEC 311
SPEC 312
SPEC 313
SPEC 314
SPEC 315
SPEC 316
SPEC 317
SPEC 318
SPEC 319
SPEC 320
SPEC 321
SPEC 322
SPEC 323
SPEC 324
SPEC 325
SPEC 326
SPEC 327
SPEC 328
SPEC 329
SPEC 330
SPEC 331
SPEC 332
SPEC 333
SPEC 334
SPEC 335
SPEC 336
SPEC 337
SPEC 338
SPEC 339
SPEC 340
SPEC 341
SPEC 342
SPEC 343
SPEC 344
SPEC 345
SPEC 346
SPEC 347
SPEC 348
SPEC 349
SPEC 350
SPEC 351
SPEC 352
SPEC 353
SPEC 354
SPEC 355
SPEC 356
SPEC 357
SPEC 358
SPEC 359
SPEC 360
SPEC 361
SPEC 362
SPEC 363
SPEC 364
SPEC 365
SPEC 366
SPEC 367
SPEC 368
SPEC 369
SPEC 370
SPEC 371
SPEC 372
SPEC 373
SPEC 374
SPEC 375
SPEC 376
SPEC 377
SPEC 378
SPEC 379
SPEC 380
SPEC 381
SPEC 382
SPEC 383
SPEC 384
SPEC 385
SPEC 386
SPEC 387
SPEC 388
SPEC 389
SPEC 390
SPEC 391
SPEC 392
SPEC 393
SPEC 394
SPEC 395
SPEC 396
SPEC 397
SPEC 398
SPEC 399
SPEC 400
SPEC 401
SPEC 402
SPEC 403
SPEC 404
SPEC 405
SPEC 406
SPEC 407
SPEC 408
SPEC 409
SPEC 410
SPEC 411
SPEC 412
SPEC 413
SPEC 414
SPEC 415
SPEC 416
SPEC 417
SPEC 418
SPEC 419
SPEC 420
SPEC 421
SPEC 422
SPEC 423
SPEC 424
SPEC 425
SPEC 426
SPEC 427
SPEC 428
SPEC 429
SPEC 430
SPEC 431
SPEC 432
SPEC 433
SPEC 434
SPEC 435
SPEC 436
SPEC 437
SPEC 438
SPEC 439
SPEC 440
SPEC 441
SPEC 442
SPEC 443
SPEC 444
SPEC 445
SPEC 446
SPEC 447
SPEC 448
SPEC 449
SPEC 450
SPEC 451
SPEC 452
SPEC 453
SPEC 454
SPEC 455
SPEC 456
SPEC 457
SPEC 458
SPEC 459
SPEC 460
SPEC 461
SPEC 462
SPEC 463
SPEC 464
SPEC 465
SPEC 466
SPEC 467
SPEC 468
SPEC 469
SPEC 470
SPEC 471
SPEC 472
SPEC 473
SPEC 474
SPEC 475
SPEC 476
SPEC 477
SPEC 478
SPEC 479
SPEC 480
SPEC 481
SPEC 482
SPEC 483
SPEC 484
SPEC 485
SPEC 486
SPEC 487
SPEC 488
SPEC 489
SPEC 490
SPEC 491
SPEC 492
SPEC 493
SPEC 494
SPEC 495
SPEC 496
SPEC 497
SPEC 498
SPEC 499
SPEC 500
SPEC 501
SPEC 502
SPEC 503
SPEC 504
SPEC 505
SPEC 506
SPEC 507
SPEC 508
SPEC 509
SPEC 510
SPEC 511
SPEC 512
SPEC 513
SPEC 514
SPEC 515
SPEC 516
SPEC 517
SPEC 518
SPEC 519
SPEC 520
SPEC 521
SPEC 522
SPEC 523
SPEC 524
SPEC 525
SPEC 526
SPEC 527
SPEC 528
SPEC 529
SPEC 530
SPEC 531
SPEC 532
SPEC 533
SPEC 534
SPEC 535
SPEC 536
SPEC 537
SPEC 538
SPEC 539
SPEC 540
SPEC 541
SPEC 542
SPEC 543
SPEC 544
SPEC 545
SPEC 546
SPEC 547
SPEC 548
SPEC 549
SPEC 550
SPEC 551
SPEC 552
SPEC 553
SPEC 554
SPEC 555
SPEC 556
SPEC 557
SPEC 558
SPEC 559
SPEC 560
SPEC 561
SPEC 562
SPEC 563
SPEC 564
SPEC 565
SPEC 566
SPEC 567
SPEC 568
SPEC 569
SPEC 570
SPEC 571
SPEC 572
SPEC 573
SPEC 574
SPEC 575
SPEC 576
SPEC 577
SPEC 578
SPEC 579
SPEC 580
SPEC 581
SPEC 582
SPEC 583
SPEC 584
SPEC 585
SPEC 586
SPEC 587
SPEC 588
SPEC 589
SPEC 590
SPEC 591
SPEC 592
SPEC 593
SPEC 594
SPEC 595
SPEC 596
SPEC 597
SPEC 598
SPEC 599
SPEC 600
SPEC 601
SPEC 602
SPEC 603
SPEC 604
SPEC 605
SPEC 606
SPEC 607
SPEC 608
SPEC 609
SPEC 610
SPEC 611
SPEC 612
SPEC 613
SPEC 614
SPEC 615
SPEC 616
SPEC 617
SPEC 618
SPEC 619
SPEC 620
SPEC 621
SPEC 622
SPEC 623
SPEC 624
SPEC 625
SPEC 626
SPEC 627
SPEC 628
SPEC 629
SPEC 630
SPEC 631
SPEC 632
SPEC 633
SPEC 634
SPEC 635
SPEC 636
SPEC 637
SPEC 638
SPEC 639
SPEC 640
SPEC 641
SPEC 642
SPEC 643
SPEC 644
SPEC 645
SPEC 646
SPEC 647
SPEC 648
SPEC 649
SPEC 650
SPEC 651
SPEC 652
SPEC 653
SPEC 654
SPEC 655
SPEC 656
SPEC 657
SPEC 658
SPEC 659
SPEC 660
SPEC 661
SPEC 662
SPEC 663
SPEC 664
SPEC 665
SPEC 666
SPEC 667
SPEC 668
SPEC 669
SPEC 670
SPEC 671
SPEC 672
SPEC 673
SPEC 674
SPEC 675
SPEC 676
SPEC 677
SPEC 678
SPEC 679
SPEC 680
SPEC 681
SPEC 682
SPEC 683
SPEC 684
SPEC 685
SPEC 686
SPEC 687
SPEC 688
SPEC 689
SPEC 690
SPEC 691
SPEC 692
SPEC 693
SPEC 694
SPEC 695
SPEC 696
SPEC 697
SPEC 698
SPEC 699
SPEC 700
SPEC 701
SPEC 702
SPEC 703
SPEC 704
SPEC 705
SPEC 706
SPEC 707
SPEC 708
SPEC 709
SPEC 710
SPEC 711
SPEC 712
SPEC 713
SPEC 714
SPEC 715
SPEC 716
SPEC 717
SPEC 718
SPEC 719
SPEC 720
SPEC 721
SPEC 722
SPEC 723
SPEC 724
SPEC 725
SPEC 726
SPEC 727
SPEC 728
SPEC 729
SPEC 730
SPEC 731
SPEC 732
SPEC 733
SPEC 734
SPEC 735
SPEC 736
SPEC 737
SPEC 738
SPEC 739
SPEC 740
SPEC 741
SPEC 742
SPEC 743
SPEC 744
SPEC 745
SPEC 746
SPEC 747
SPEC 748
SPEC 749
SPEC 750
SPEC 751
SPEC 752
SPEC 753
SPEC 754
SPEC 755
SPEC 756
SPEC 757
SPEC 758
SPEC 759
SPEC 760
SPEC 761
SPEC 762
SPEC 763
SPEC 764
SPEC 765
SPEC 766
SPEC 767
SPEC 768
SPEC 769
SPEC 770
SPEC 771
SPEC 772
SPEC 773
SPEC 774
SPEC 775
SPEC 776
SPEC 777
SPEC 778
SPEC 779
SPEC 780
SPEC 781
SPEC 782
SPEC 783
SPEC 784
SPEC 785
SPEC 786
SPEC 787
SPEC 788
SPEC 789
SPEC 790
SPEC 791
SPEC 792
SPEC 793
SPEC 794
SPEC 795
SPEC 796
SPEC 797
SPEC 798
SPEC 799
SPEC 800
SPEC 801
SPEC 802
SPEC 803
SPEC 804
SPEC 805
SPEC 806
SPEC 807
SPEC 808
SPEC 809
SPEC 810
SPEC 811
SPEC 812
SPEC 813
SPEC 814
SPEC 815
SPEC 816
SPEC 817
SPEC 818
SPEC 819
SPEC 820
SPEC 821
SPEC 822
SPEC 823
SPEC 824
SPEC 825
SPEC 826
SPEC 827
SPEC 828
SPEC 829
SPEC 830
SPEC 831
SPEC 832
SPEC 833
SPEC 834
SPEC 835
SPEC 836
SPEC 837
SPEC 838
SPEC 839
SPEC 840
SPEC 841
SPEC 842
SPEC 843
SPEC 844
SPEC 845
SPEC 846
SPEC 847
SPEC 848
SPEC 849
SPEC 850
SPEC 851
SPEC 852
SPEC 853
SPEC 854
SPEC 855
SPEC 856
SPEC 857
SPEC 858
SPEC 859
SPEC 860
SPEC 861
SPEC 862
SPEC 863
SPEC 864
SPEC 865
SPEC 866
SPEC 867
SPEC 868
SPEC 869
SPEC 870
SPEC 871
SPEC 872
SPEC 873
SPEC 874
SPEC 875
SPEC 876
SPEC 877
SPEC 878
SPEC 879
SPEC 880
SPEC 881
SPEC 882
SPEC 883
SPEC 884
SPEC 885
SPEC 886
SPEC 887
SPEC 888
SPEC 889
SPEC 890
SPEC 891
SPEC 892
SPEC 893
SPEC 894
SPEC 895
SPEC 896
SPEC 897
SPEC 898
SPEC 899
SPEC 900
SPEC 901
SPEC 902
SPEC 903
SPEC 904
SPEC 905
SPEC 906
SPEC 907
SPEC 908
SPEC 909
SPEC 910
SPEC 911
SPEC 912
SPEC 913
SPEC 914
SPEC 915
SPEC 916
SPEC 917
SPEC 918
SPEC 919
SPEC 920
SPEC 921
SPEC 922
SPEC 923
SPEC 924
SPEC 925
SPEC 926
SPEC 927
SPEC 928
SPEC 929
SPEC 930
SPEC 931
SPEC 932
SPEC 933
SPEC 934
SPEC 935
SPEC 936
SPEC 937
SPEC 938
SPEC 939
SPEC 940
SPEC 941
SPEC 942
SPEC 943
SPEC 944
SPEC 945
SPEC 946
SPEC 947
SPEC 948
SPEC 949
SPEC 950
SPEC 951
SPEC 952
SPEC 953
SPEC 954
SPEC 955
SPEC 956
SPEC 957
SPEC 958
SPEC 959
SPEC 960
SPEC 961
SPEC 962
SPEC 963
SPEC 964
SPEC 965
SPEC 966
SPEC 967
SPEC 968
SPEC 969
SPEC 970
SPEC 971
SPEC 972
SPEC 973
SPEC 974
SPEC 975
SPEC 976
SPEC 977
SPEC 978
SPEC 979
SPEC 980
SPEC 981
SPEC 982
SPEC 983
SPEC 984
SPEC 985
SPEC 986
SPEC 987
SPEC 988
SPEC 989
SPEC 990
SPEC 991
SPEC 992
SPEC 993
SPEC 994
SPEC 995
SPEC 996
SPEC 997
SPEC 998
SPEC 999
SPEC 1000

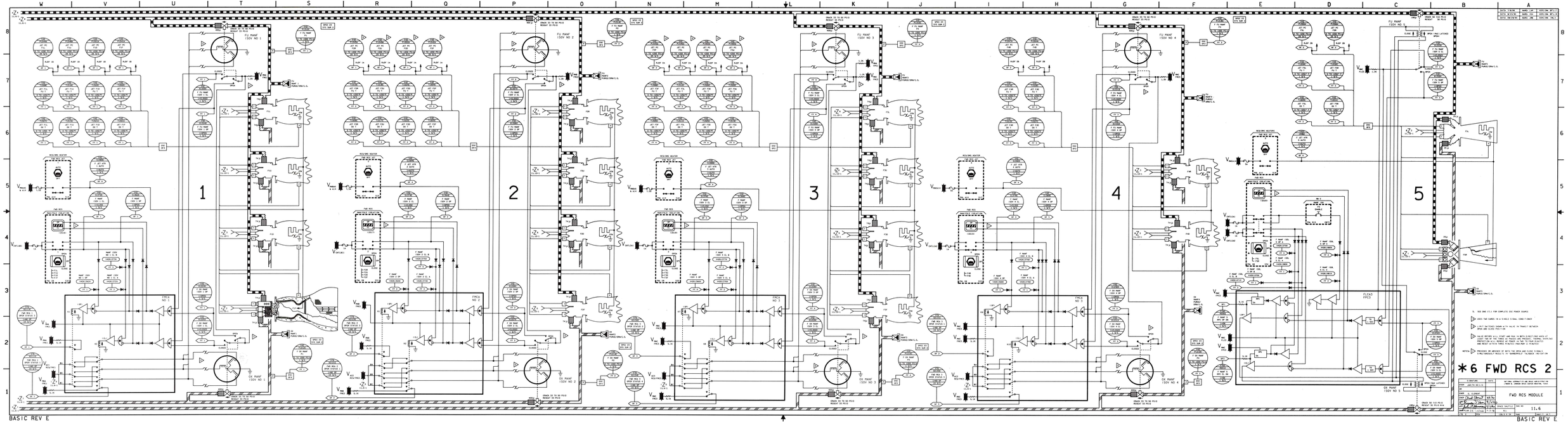
1
2
3
4
5
*6 FWD RCS 2
FWD RCS MODULE
BASIC REV E
BASIC REV E

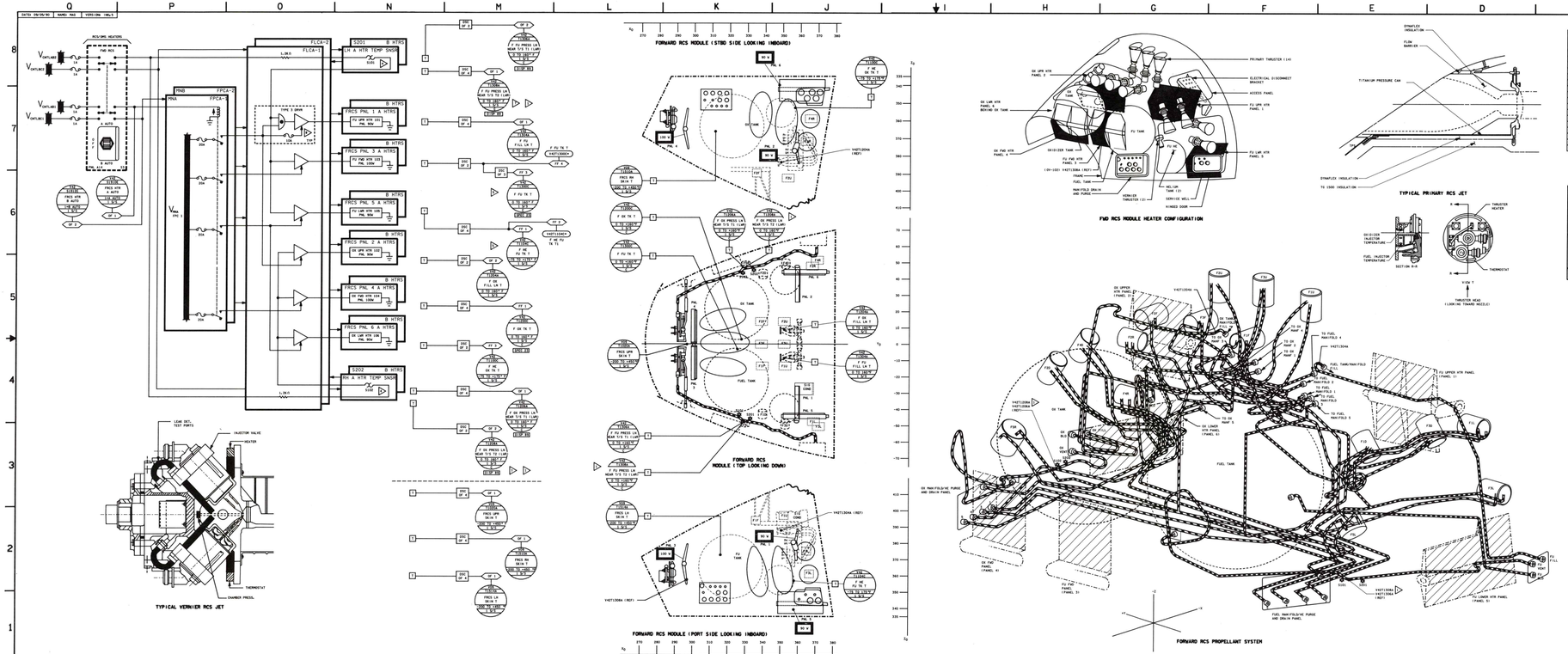

FWD RCS JET HEATERS	
MEASUREMENT NO ▷	
RCS JET	OX (PA) / FU (PA)
F1F	V42T12G012 / V42T12G020
F2F	V42T12G036 / V42T12G042
F3F	V42T12G060 / V42T12G066
F1L	V42T12G072 / V42T12G082
F2R	V42T12G090 / V42T12G106
F3L	V42T12G112 / V42T12G125
F4R	V42T12G130 / V42T12G142
F1U	V42T12G148 / V42T12G160
F2U	V42T12G176 / V42T12G182
F3U	V42T12G196 / V42T12G206
F4D	V42T12G212 / V42T12G222
F2D	V42T12G230 / V42T12G242
F3D	V42T12G252 / V42T12G262
F4D	V42T12G270 / V42T12G286
F3L	V42T12G292 / V42T12G302
F4R	V42T12G312 / V42T12G326

MEASUREMENT RANGES (+200)°F

▷ SET POINT RANGE OX JETS = 235 - 255°F VERNIER RCS 145 - 165.4°F

ALL INJ HTRS 30W EXCEPT MAIN 3 (15W)

FWD RCS PANEL HEATERS								
LOCATION	HTR PNL	HTR NBR	VOLTS	ITEM	FSH MULTIPLE MEASUREMENT	S/S 51002-201(-A-B)		
						FPCA	FPCF	FPCA
LH AFT RCS HTRS		▷	▷		▷	▷	▷	▷
FU UPR	PNL-1	10141-81	30			55.1-71.5	58.7-71.5	59.4-76.3
FU LWR	PNL-3	10141-83	30			111.4-71.5	111.4-71.5	115.5-66.1
LH TOTAL		10141-81	60					
		▲ HTRS	280					
		B HTRS	280					
RH FWD RCS HTRS						S/S 51002-201(-A-B)		
OX FWD	PNL-2	10141-82	30			55.1-63.5	58.1-71.5	65.5-71.5
OX AFT	PNL-4	10141-84	30			111.4-63.5	111.4-71.5	115.5-66.1
RH TOTAL		10141-82	60					
		▲ HTRS	280					
		B HTRS	280					
FWD RCS TOTAL		▲ HTRS	560W					
		B HTRS	560W					

15. REFER TO TBL 11.1 FOR DRAWING TRACEABILITY

▷ EACH FWD RCS JET THERMOSTAT SET POINT RANGE (PRIMARY AND VERNIER) IS BASED ON THE LOW VALUE OF THE TEMPERATURE RANGE (ALL VEHICLE & JETS -TESTED VALVES, NOT SPEC).

▷ TYPE 3 DRIVER IS LISTED AS 5 AMPS, BUT HAS FUSE CAPABILITY TO 10 AMPS

1. TEMPERATURE MEASUREMENTS REFLECT HEATER AND S/S OPERATIONS IN THE HEATER LOCATED MOST NEARLY TO THE LEFT OF THE ▽

▷ JET TEMPS PASS THROUGH DSC 5 SPF2 AND SPF4

▷ PARAMETERS CHANNELIZED ON TWO MDM'S

▷ FWD RCS THERMAL SWITCH LOCATIONS (PRIMARY AND VERNIER) ARE IDENTICAL JET PSL #4 S1001-50001 OR SM LINE BRAZING JET PSN

▷ ALL HEATER WATTAGE SPEC VALUES ASSUME 270VDC AT THE PDU INTERFACE

2. ALL HEATERS HAVE REDUNDANT 1A AND B1 ELEMENTS CONTROLLED BY INDIVIDUAL THERMOSTATS
● FWD RCS THERMOSTATS
▽ 5-5 RANGE
OPEN BEFORE 315°F
CLOSE BEFORE 315°F
DATA BAND 5°F

NOTES: ▽▽=LOCATED

LEGEND
04-01329 THERMOSTAT (TYPICAL)
FUEL
HEATER
● OPERATIONAL INSTRUMENTATION

7 FWD HTRS

SIGNATURE	DATE	NATIONAL AERONAUTICS AND SPACE ADMINISTRATION
DSGN: LINDA DUFFY	11/22/93	LYNDON B. JOHNSON SPACE CENTER HOUSTON, TEXAS
CHKD: THOMAS LAU		HEATER CONTROL SYS FWD RCS
APPD:		
APPD:		
APPD:	

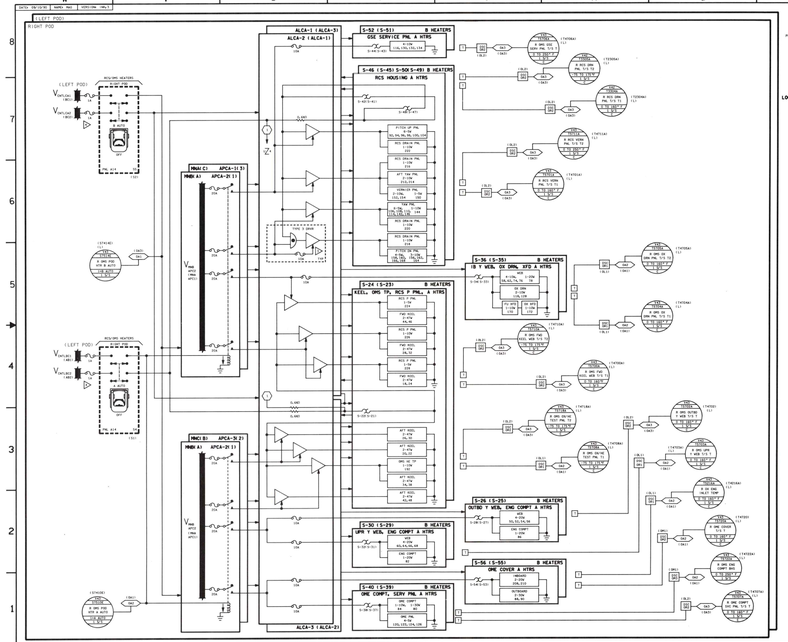

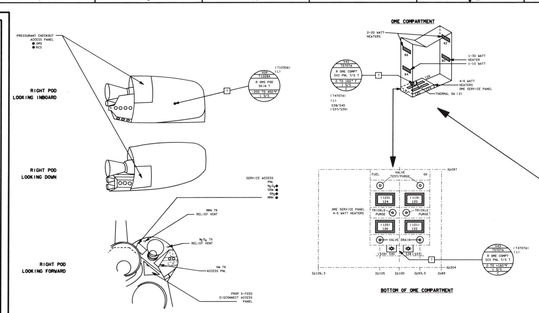

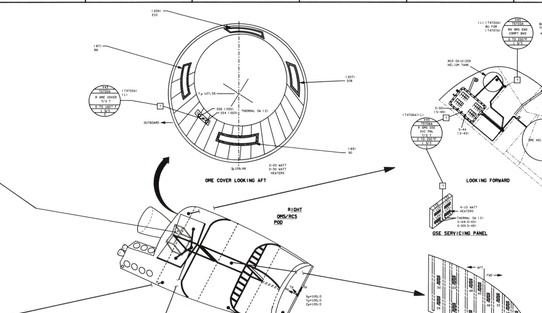

AFT OMS HEATERS				THERMAL SW RESET PT					
LOCATION	WTR WD W/I ORBIT	WATTS	FOA PER FOR REQUIREMENT	GROUP	MIN	LPU	MAX	LPU	MAX
					A/B	A/B	A/B	A/B	A/B
OMS COMPARTMENT	108 (28)	5	V07T0727A						
PANEL	108 (28)	5	V07T0727A						
	108 (28)	5	V07T0727A						
ON COMPARTMENT	84 (0)	10	V07T0727A						
	84 (0)	10	V07T0727A						
INBOARD Y WEB	58 (0)	10	V07T0727A						
	58 (0)	10	V07T0727A						
	58 (0)	20	V07T0727A						
	58 (0)	20	V07T0727A						
DX OMS-A PNL	108 (28)	20	V07T0727A	#1	0/34/56	5/35/55	0/34/56	5/35/55	0/34/56
	108 (28)	20	V07T0727A		0/34/56	5/35/55	0/34/56	5/35/55	0/34/56
FX XFD	132 (68)	10	V07T0727A						
DX XFD	132 (68)	10	V07T0727A						
FWD	18 (7)	47	V07T0727A	#2					
AFT	18 (7)	47	V07T0727A						
AFR	18 (7)	47	V07T0727A						
	84 (42)	47	V07T0727A						
	84 (42)	47	V07T0727A						
RCS DX PRESS PNL	204 (120)	10	V07T0727A	#3	0/22/34	5/27/33	0/22/34	5/27/33	0/22/34
	204 (120)	10	V07T0727A		0/22/34	5/27/33	0/22/34	5/27/33	0/22/34
AFT	132 (68)	47	V07T0727A						
KEEL	132 (68)	47	V07T0727A						
WEB	132 (68)	47	V07T0727A						
	84 (42)	47	V07T0727A						
	84 (42)	47	V07T0727A						
	84 (42)	47	V07T0727A						
OMS TP	192 (84)	10	V07T0727A	#4	0/22/34	5/27/33	0/22/34	5/27/33	0/22/34
			V07T0727A		0/22/34	5/27/33	0/22/34	5/27/33	0/22/34
			V07T0727A						
UPPER Y WEB	84 (0)	20	V07T0727A	#5	0/34/56	5/35/55	0/34/56	5/35/55	0/34/56
	84 (0)	20	V07T0727A		0/34/56	5/35/55	0/34/56	5/35/55	0/34/56
	84 (0)	20	V07T0727A						
	84 (0)	20	V07T0727A						
ONE COMPT	84 (0)	20	V07T0727A	#6	0/34/56	5/35/55	0/34/56	5/35/55	0/34/56
OUTBD Y WEB	84 (0)	20	V07T0727A		0/34/56	5/35/55	0/34/56	5/35/55	0/34/56
	84 (0)	20	V07T0727A						
	84 (0)	20	V07T0727A						
ONE COMPT	84 (0)	20	V07T0727A	#7	0/34/56	5/35/55	0/34/56	5/35/55	0/34/56
	84 (0)	20	V07T0727A		0/34/56	5/35/55	0/34/56	5/35/55	0/34/56
ONE COVER	84 (0)	20	V07T0727A	#8	0/34/56	5/35/55	0/34/56	5/35/55	0/34/56
	84 (0)	20	V07T0727A		0/34/56	5/35/55	0/34/56	5/35/55	0/34/56
	84 (0)	20	V07T0727A						
	84 (0)	20	V07T0727A						
OFF	192 (84)	10	V07T0727A	#9	0/22/34	5/27/33	0/22/34	5/27/33	0/22/34
	192 (84)	10	V07T0727A		0/22/34	5/27/33	0/22/34	5/27/33	0/22/34
	192 (84)	10	V07T0727A						
# ELEMENTS TOTAL	1188								
# ELEMENT TOTALS	1188								
	1188								

NOTES:
A. FOR DETAILED GEOMETRY AND LAYOUT INFORMATION REFERENCE "HEATER CONTROL SYSTEM" AND LTD LTR&D 1980 FOR HEATER DATA.
B. ALL TEMPERATURES ARE LIMIT TEMPERATURES.
C. WHERE ONLY EVEN HEATER NUMBERS ARE LISTED, THE ODD NUMBERS ARE LOCATED ON THE OPPOSITE SIDE OF THE PANEL FROM THE EVEN NUMBERED HEATERS. (EXAM: FWD POD HEATER NUMBERS 1 EXIST)
D. TEMPERATURES WHEN THE HEATER OPERATION OF THE PATCH MUST NEARLY TO THE LEFT OF THE
E. THE FUSES FROM THE CONTROL BLOCK TO PANEL ALA AND 2 AMP FUSES ON THE CUTTING
F. TYPE D BREAKER IS LISTED AS 5 AMPS, BUT HAS FUSE EQUIVALENT TO 10 AMPS.
G. ALL HEATER WATTAGE SPEC VALUES ASSUME STUDS AT THE PRO HEATERS.
H. ALL HEATERS HAVE REDUNDANT 1-A AND B1 ELEMENTS WHICH ARE CONTROLLED BY SEPARATE THERMOSTATS. ALL THERMOSTATS ARE CONTROL THERMOSTATS. THERMOSTATS ARE SPECIFICATION.
I. ■ INDICATES HEATER ARE AT THIS THERMOSTAT
AT ORBIT
OPEN BEFORE TEST F
OPEN BEFORE BOOST F
CLOSE BEFORE ENTRY
CLOSE BEFORE LANDING
J. ALL HEATERS ARE 28 VOLT HEATER

8 HTR OMS/RCS POD 1

SIGNATURE	DATE	MATERIAL UNDERGOES ONE MORE APPLICATION OF THERMAL ARMOR EPOXY WHITE PAINT
CHIEF ENGINEER A. ORAN	12-14-81	
QA		HEATER CONTROL SYS
DESIGN		OMS POD
STRESS THERMAL LAYO		
PROJECT ENGINEER		
PROJECT MANAGER		
		SPACE SHUTTLE DWG NO 11.8
SIZE	CODE	SCALE
D	80386	NONE

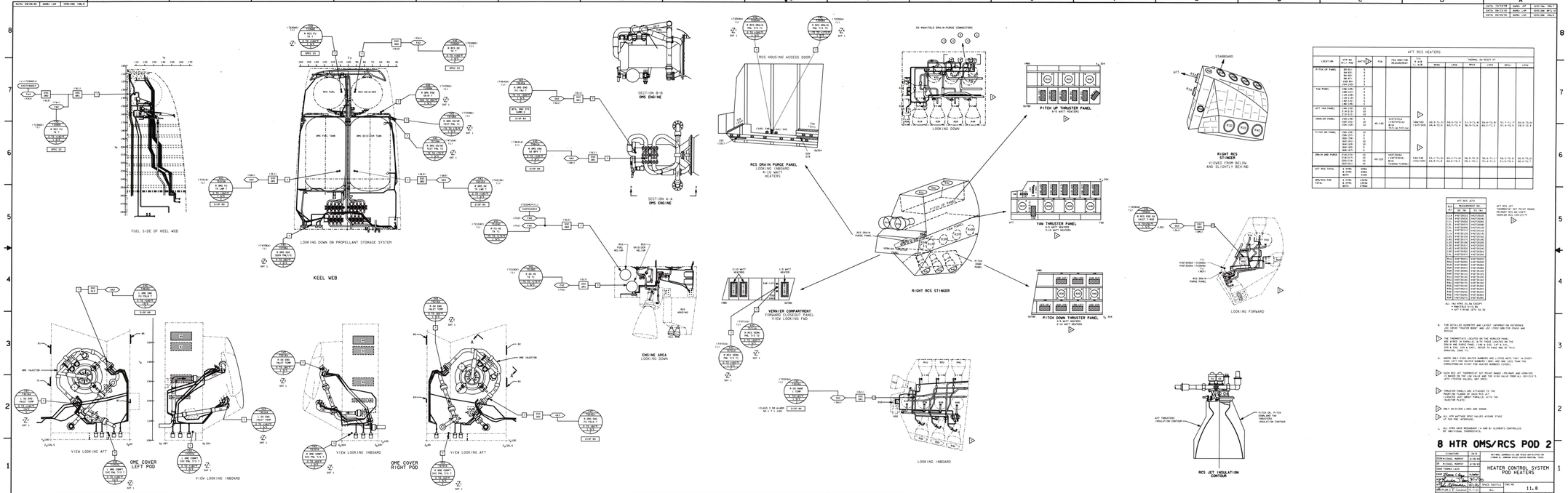

AFT RCS HEATERS										
LOCATION	HTR NO. W1 / W2	WATTS	FSA	FSA MON/OBI MEASUREMENT	T/S 1 & 2	THERMAL TM RESET #1				
						MIN+	LPSM	MIN-	LPSM	
PITCH UP PANEL	R3 R11 R4 R12 R5 R13 R6 R14	5 5 5 5 5 5 5 5								
YAW PANEL	C38 L25 L26 C39 L27 L28 C40 L29 L30 C41	5 5 5 5 5 5 5 5 5 5								
AFT YAW PANEL	L44 L45 L46 L47	10 10 10 10								
VERNIER PANEL	C50 L85 C51 L86 C52 L87	5 10 5 10 5 10	W1-W2	V4573-T014 V4573-T015 R/W T5711A-T5712A	T48/T49 T47/T50	55.5-71.5 55.5-71.5	55.5-71.5 55.5-71.5	56.4-72.8 56.4-72.8	55.1-71.1 55.1-71.1	56.4-72.8 56.4-72.8
PITCH DN PANEL	C56 L92 C57 L93 C58 L94 C59 L95 C60 L96 C61 L97	10 5 10 5 10 5 10 5 10 5 10 5								
DRAIN AND PURGE	C62 L98 C63 L99 C64 L100 C65 L101 C66 L102 C67 L103	10 10 10 10 10 10	W1-W2	V4573-T016A V4573-T016C R/W T5713A-T5714A	T45/T46 T44/T51	55.5-71.5 55.5-71.5	55.5-71.5 55.5-71.5	56.4-72.8 56.4-72.8	55.1-71.1 55.1-71.1	56.4-72.8 56.4-72.8
AFT RCS TOTAL	4 HTRS 4 HTRS W1/W2	200W 180W 470W								
OMS/RCS POD TOTAL	4 HTRS 4 HTRS W1/W2	1360W 1180W 2780W								

AFT RCS JETS	
JET	REACTANT NO.
	JET (W-1%) P2 (%)
L1A	V4573-T013 V4573-T021
L1L	V4573-T026 V4573-T031
L1R	V4573-T036 V4573-T041
L2A	V4573-T046 V4573-T051
L2L	V4573-T056 V4573-T061
L2R	V4573-T066 V4573-T071
L3A	V4573-T076 V4573-T081
L3L	V4573-T086 V4573-T091
L3R	V4573-T096 V4573-T101
L4A	V4573-T106 V4573-T111
L4L	V4573-T116 V4573-T121
L4R	V4573-T126 V4573-T131
R1A	V4573-T014 V4573-T020
R1L	V4573-T024 V4573-T030
R1R	V4573-T034 V4573-T040
R2A	V4573-T044 V4573-T050
R2L	V4573-T054 V4573-T060
R2R	V4573-T064 V4573-T070
R3A	V4573-T074 V4573-T080
R3L	V4573-T084 V4573-T090
R3R	V4573-T094 V4573-T100
R4A	V4573-T104 V4573-T110
R4L	V4573-T114 V4573-T120
R4R	V4573-T124 V4573-T130

ALL VALVES SLOW EXCEPT
L1A, L1R, R1A, R1R
4 JET FIRING JETS 35.5#

AFT RCS JET THERMOSTAT SET POINT RANGE FOR HEATER CONTROL AND OVERHEAT MONITORING (°F)

ON	OFF
55.5	71.5
56.4	72.8
55.1	71.1

NOTES:

A. FOR DETAILED GEOMETRY AND LAYOUT INFORMATION REFERENCE JSC DRAWING "HEATER BOOK" AND LEC 19922 (RH TOP CRACK AND SIDE).

B. THE THERMOSTATS LOCATED ON THE VERNIER PANEL ARE WIRED IN PARALLEL WITH THOSE LOCATED ON THE AFT RCS PANEL. (EXAMPLE: T47 ON VERNIER PANEL AND T46, T49 & T48, RESPECTIVELY, ON AFT RCS PANEL ARE OF THIS CONFIGURATION).

C. WHERE ONLY EVEN HEATER NUMBERS ARE LISTED NOTE THAT IN EVERY CASE LEFT POD HEATER NUMBERS (ARE ONE LESS THAN THE CORRESPONDING RIGHT POD HEATER NUMBERS (EXCEPT).

D. EACH RCS JET THERMOSTAT SET POINT RANGE (PRIMARY AND VERNIER) IS SHOWN ON THE ABOVE TABLE. FOR THE PITCH VALVE FROM ALL VERNIER IS APPLY (T52/T53 VALVES, NOT SPEC).

E. THRUSTER PANELS ARE ATTACHED TO THE MOUNTING FLANGE OF EACH RCS JET THROUGH FOUR SHORT PANELS, WITH THE INJECTOR PLATE.

F. ONLY OX-SIDE LINES ARE SHOWN

G. ALL HTR WATTAGE SPEC VALUES ASSUME 270VDC AT THE POD INTERFACE.

I. ALL HTRS HAVE REDUNDANT 4 AND 8B ELEMENTS CONTROLLED BY INDIVIDUAL THERMOSTATS.

8 HTR OMS/RCS POD 2

CONCURS	DATE
EDA-4/DANIEL MURPHY	9/28/90
EP - MICHAEL MURPHY	9/28/90
CHIEF THERMAL ENGR	
APPROVED Glenn Kipp 9/28/90	
CHIEF, ENGINEERING DIV. Ed Ullmann 10/2/90	
MANAGER, SYSTEMS ENGR & INTEGRATION	

NATIONAL AERONAUTICS AND SPACE ADMINISTRATION
LYNDON B. JOHNSON SPACE CENTER HOUSTON, TEXAS

HEATER CONTROL SYSTEM POD HEATERS

SPACE SHUTTLE	DWG NO
PROGRAM	11.8
TITLE	SHEET 1 OF 2
SCALE NONE	DATE 10/5/90

BASIC REV E

DATE= 09/09/90 NAME= JMB VERSION= IMA.2

DATE= 10/21/88 NAME= LAY VERSION= IMA.1
DATE= 08/28/90 NAME= LAY VERSION= BFT.1.0
DATE= 09/09/90 NAME= JMB VERSION= IMA.2

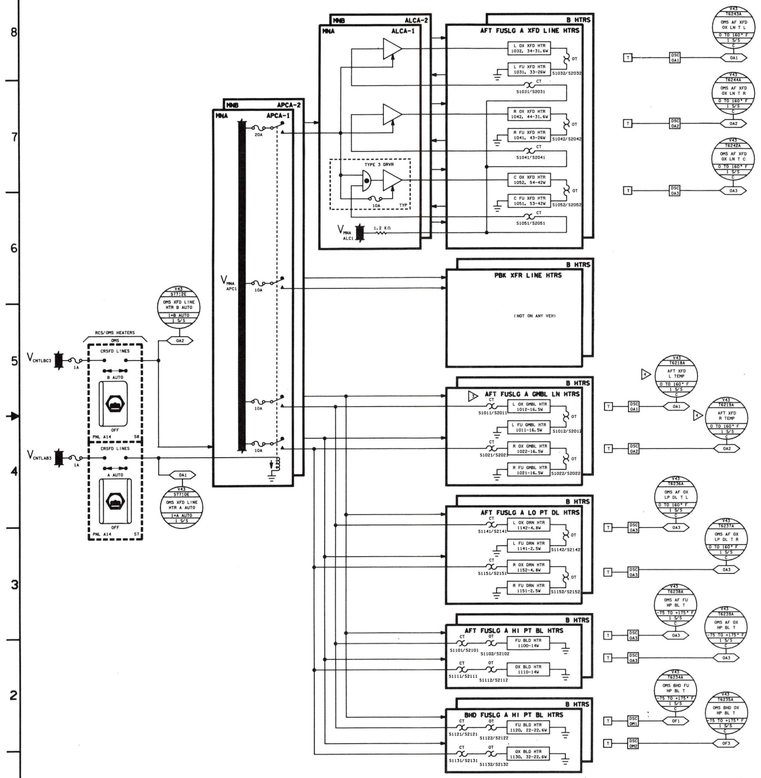

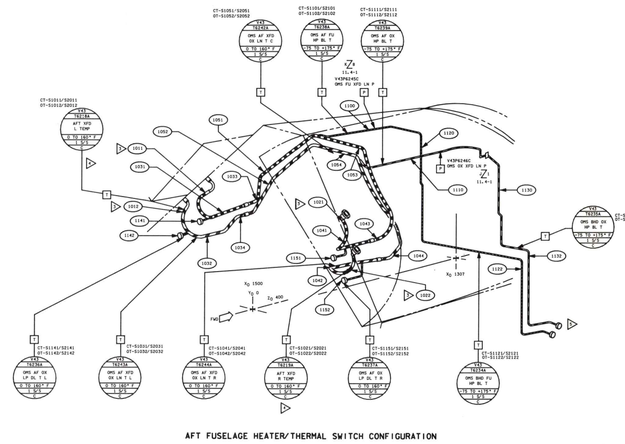

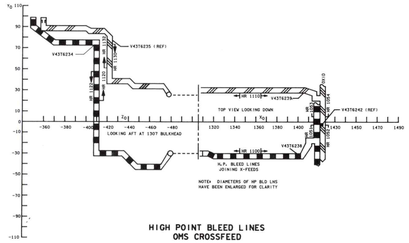

RIGHT SIDE LOOKING
INBOARD

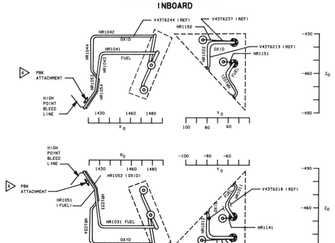

LEFT SIDE LOOKING
INBOARD

AFT FUSELAGE OMS XFD HEATERS

LOCATION	HTR NO	THERMAL SW NOM ENTL THERMOSTAT (OVER T₁ THERMOSTAT) A / B	DV-102 RELIEF VLV HTR (T ON @ 45°F) (OT @ 90°F)	DV-105 RELIEF VLV HTR (T ON @ 45°F) (OT @ 90°F)	DV-104 RELIEF VLV HTR (T ON @ 45°F) (OT @ 90°F)	HEATER LENGTH INCHES	ELEC SPEC WATTS	VOLTS	FDA LIMITS °F	FDA MONITORING MID	SPEC MID
LH OMBL LINES	1012	S1051/S2051	58.5-71.5/57.5-71.7	58.6-72.0/60.5-72.6	59.8-72.1/59.5-72.1	J602B	J-20	26.5	43.5	50.0#	V43T62104 #4
DRAIN LINES	1142	S1052/S2052	57.5-69.5/57.5-69.5	58.0-71.5/58.5-71.5	59.0-71.5/59.0-71.5	J603B	L-20	26.5	43.5		
LH LO PT DRAIN LINES	1141	(S1140/S2140) S1141/S2141	(72.9-86.1/74.8-85.5) 59.5-72.5/59.5-71.1	(70.9-82.8/71.4-83.4) 58.0-71.1/58.5-71.4	(72.4-83.9/73.8-83.7) 59.5-72.5/59.5-72.5	J602 J603	J-20 L-20	26.5 26.5	43.5 43.5	50.0#	V43T62104 #4
RH OMBL LINES	1031 1032	S1051/S2051 S1052/S2052	58.6-71.5/58.8-71.2 (71.5-86.1/75.6-86.4)	58.6-73.2/58.6-72.0 (72.9-82.8/71.4-83.4)	58.7-71.9/58.7-72.1 (72.4-83.9/73.8-83.7)	J603B J602B	J-20 L-20	26.5 26.5	43.5 43.5	50.0#	V43T62104 #4
RH LO PT DRAIN LINES	1151 1152	(S1150/S2150) S1151/S2151	(78.9-97.5/79.7-96.8) 59.1-72.5/59.5-70.3	(72.4-82.3/72.3-84.1) 58.6-71.5/58.7-70.2	(71.9-85.2/74.4-83.3) 58.8-71.5/58.9-71.4	J602 J603	J-20 L-20	26.5 26.5	43.5 43.5	50.0#	V43T62104 #4
CENTER XFD LINES	1051 1052 1044	(S1050/S2050) S1051/S2051	(77.4-89.9/78) 59.9-73.5/57.5-72.3	(71.6-81.5/70.7-81.2) 59.1-71.7/59.2-71.8	(70.1-85.5/71.7-85.0) 57.9-73.5/59.9-73.5	J603B J602B J604B	0.75 0.75 0.75	31.0 31.0 15.8	6.75 6.75 7.35	50-100	V43T62434 #9
RH PT BLD LINES	1100 1110	(S1100/S2100) S1101/S2101 (S1110/S2110) S1111/S2111	(74.2-86.4/74.7-91.0) 53.1-71.2/59.4-75.5 (74.1-86.8/78.7-88.7) 54.2-70.0/57.8-69.2	(71.9-81.1/71.6-81.3) 58.1-71.4/58.2-72.2 (71.3-82.9/71.6-81.5) 57.6-71.6/60.0-72.8	(73.5-83.4/78) 58.6-71.5/59.2-72.2 (71.5-83.8/73.5-83.5) 59.6-71.1/57.3-71.4	J604B J605B	0.125 0.125	14.9 15.4	7.35 7.35	50-110	V43T62386 — V43T62394 —
BHD BLD LINES	1120 1130	(S1120/S2120) S1121/S2121 (S1130/S2130) S1131/S2131	(74.2-87.4/74.7-87.1) (73.4-86.2/77.5-86.1) 54.2-70.0/57.8-69.2	(73.2-83.5/73.2-84.4) (72.5-84.5/74.2-84.3) 57.6-71.6/60.0-72.8	(73.1-83.3/73.1-84.4) (72.5-83.9/74.1-84.3) 59.6-71.1/57.3-71.4	J606	0.125 0.125 0.125	13.3 13.3 15.4	13.5 13.5 7.35	45-100 45-100	V43T62346 — V43T62354 —
LH XFD LINES	1031 1050 1042	(S1050/S2050) S1050/S2051	(76.1-85.8/TBD) 54.3-71.5/57.1-71.7	(72.1-82.5/70.8-82.5) 58.8-72.6/59.4-72.7	(71.1-82.5/73.5-82.6) 58.9-74.1/60.0-72.9	J603B J602B J604B J605B	0.75 0.75 0.75 0.75	15.0 15.0 15.8 15.4	6.75 6.75 7.35 7.35	50-90	V43T62434 —
RH XFD LINES	1041 1052 1044	(S1040/S2040) S1042/S2041	(72.9-81.1/TBD) 54.3-71.5/58.9-71.6	(71.3-83.5/73.4-81.5) 58.7-72.0/59.0-73.1	(70.8-85.5/72.3-85.0) 59.0-72.9/60.9-72.7	J603B J602B J604B J605B	0.75 0.75 0.75 0.75	15.0 15.0 15.8 15.4	6.75 6.75 7.35 7.35	50-90	V43T62434 —

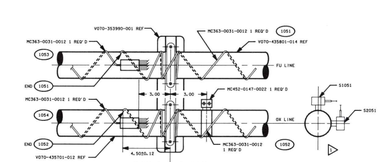

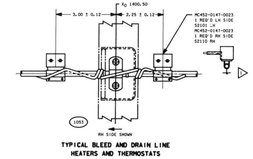

NOTES:
A. TEMPERATURE MEASUREMENTS REFLECT HEATER AND T/S OPERATIONS OF THE HEATER LOCATED MOST NEARLY TO THE LEFT OF THE □
1. DV-102 CENTER, LH AND RH XFD LINES HAVE 1.25 INCH RADII.
2. PAYLOAD BAY FIT T-LINES ARE NOT REQUIRED, AND WERE REMOVED FROM DV-102, THE ATTACHMENT POINTS STILL EXIST ON DV-102
3. DV-102 DOES NOT HAVE THE UPGRADED 130T BULKHEAD, THE FU HP BLD LINE IS ROUTED TO THE LEFT SIDE OF THE VEHICLE
4. TEMPERATURE MEASUREMENT LOCATIONS ARE VEHICLE SPECIFIC DV-102S LI/RI FU FLX LN DV-103L,104L LI/RI OF OMBL LN DIAGONAL ROUTING IS THE SAME
5. DV-102 HAS FLEX LINE INSTEAD OF GIMBAL LINE, SO THE HEATER NOMENCLATURE =5A FLX HTR.
6. ALL HEATER WATTAGE SPEC VALUES ASSUME 27 VDC AT THE POD INTERFACE
NOTES: ALL HEATERS HAVE REDUNDANT #A AND B1 ELEMENTS CONTROLLED BY ■ AFT FUSELAGE THERMOSTATS
■ AFT FUSELAGE THERMOSTATS
CT RANGE
OPEN BEFORE 75.5°F
CLOSE BEFORE 59.5°F
ENTL BAND 6°F
OT RANGE
OPEN BEFORE 90.5°F
CLOSE BEFORE 70.5°F
ENTL BAND 6°F

9 HTR AFT OMS/RCS

SIGNATURE	DATE	
DOSHTERESA M. WILSON	5/15/89	NATIONAL AERONAUTICS AND SPACE ADMINISTRATION LYNDON B. JOHNSON SPACE CENTER HOUSTON, TEXAS
QA		
CHAIR THOMAS LAZO		HEATER CONTROL SYS AFT OMS/RCS CROSSFEED
CHAIR [signature]	9/14/90	
MPAD [signature]	9/14/90	
MPAD [signature]	9/14/90	
CM [signature]	9/14/90	
MPAD PLAN S / Gedosa	9/14/90	

SPACE SHUTTLE | DWG NO 11.9
ALL | REV
SIZE D | FSCM | SHEET 1 OF 1

BASIC REV E

BASIC REV E

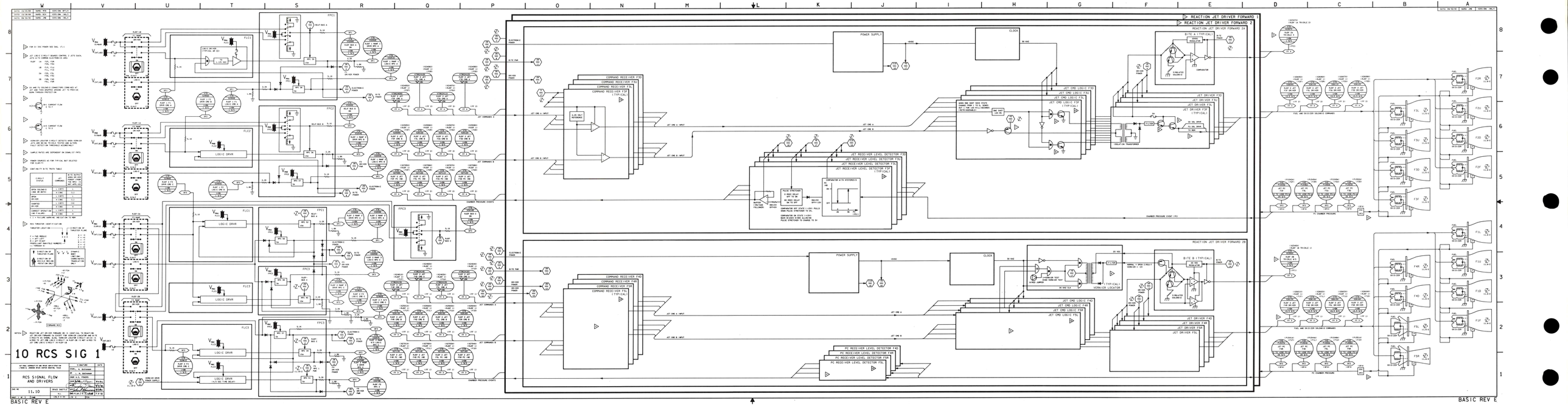
10 RCS SIG 1
RCS SIGNAL FLOW AND DRIVERS
11.10
BASIC REV E
REACTION JET DRIVER FORWARD 1
REACTION JET DRIVER FORWARD 2
REACTION JET DRIVER FORWARD 2A
REACTION JET DRIVER FORWARD 2B
POWER SUPPLY
CLOCK
LOGIC DRVR
COMMAND RECEIVER F3D
COMMAND RECEIVER F3U
COMMAND RECEIVER F3L
COMMAND RECEIVER F4D
COMMAND RECEIVER F4R
COMMAND RECEIVER F5R
COMMAND RECEIVER F5L
JET CMD LOGIC F3D
JET CMD LOGIC F3U
JET CMD LOGIC F3L
JET CMD LOGIC F4D
JET CMD LOGIC F4R
JET CMD LOGIC F5R
JET CMD LOGIC F5L
JET DRIVER F3D
JET DRIVER F3U
JET DRIVER F3L
JET DRIVER F4D
JET DRIVER F4R
JET DRIVER F5R
JET DRIVER F5L
JET RECEIVER LEVEL DETECTOR F3D
JET RECEIVER LEVEL DETECTOR F3U
JET RECEIVER LEVEL DETECTOR F3L
PC RECEIVER LEVEL DETECTOR F4D
PC RECEIVER LEVEL DETECTOR F4R
PC RECEIVER LEVEL DETECTOR F5R
PC RECEIVER LEVEL DETECTOR F5L
BITE A (TYPICAL)
BITE B (TYPICAL)
VERNIER LOCATOR
CHAMBER PRESSURE EVENT
PC CHAMBER PRESSURE

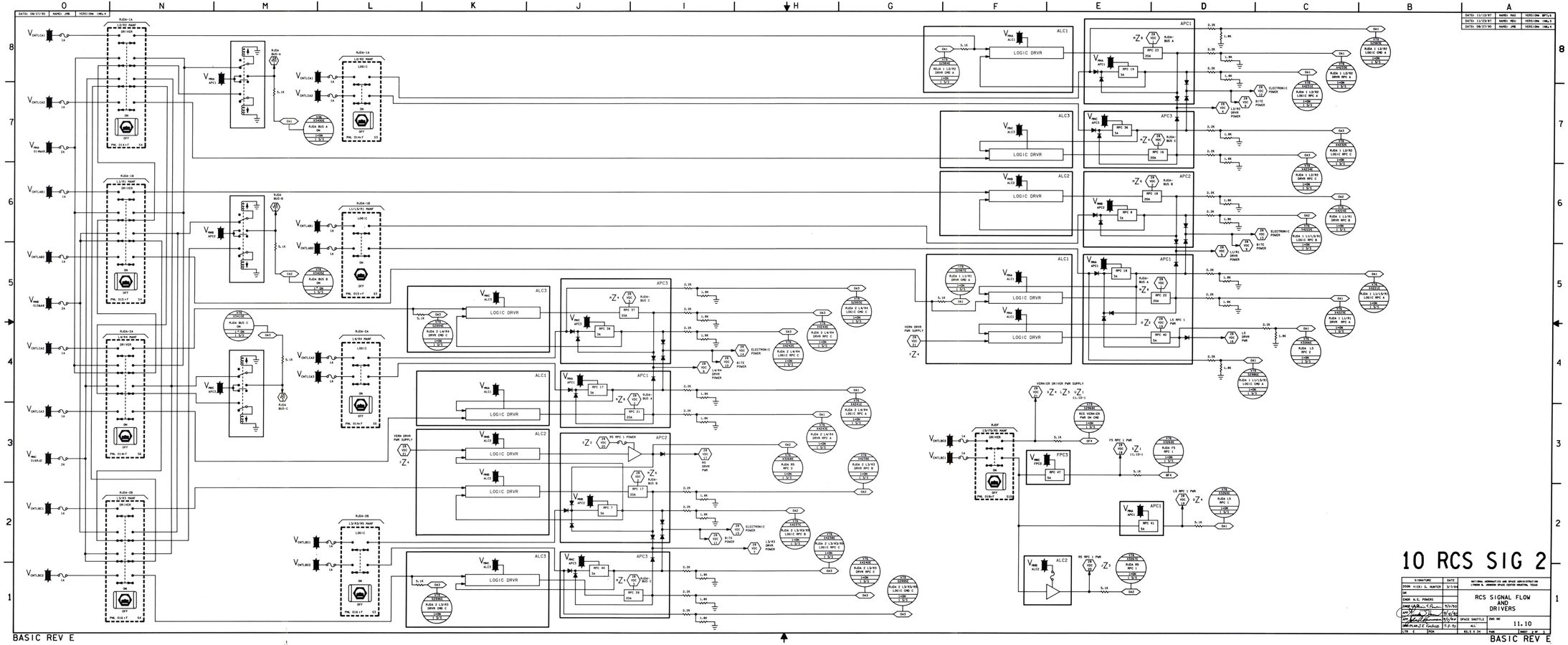
10 RCS SIG 2
RCS SIGNAL FLOW AND DRIVERS
SPACE SHUTTLE
11.10
BASIC REV E

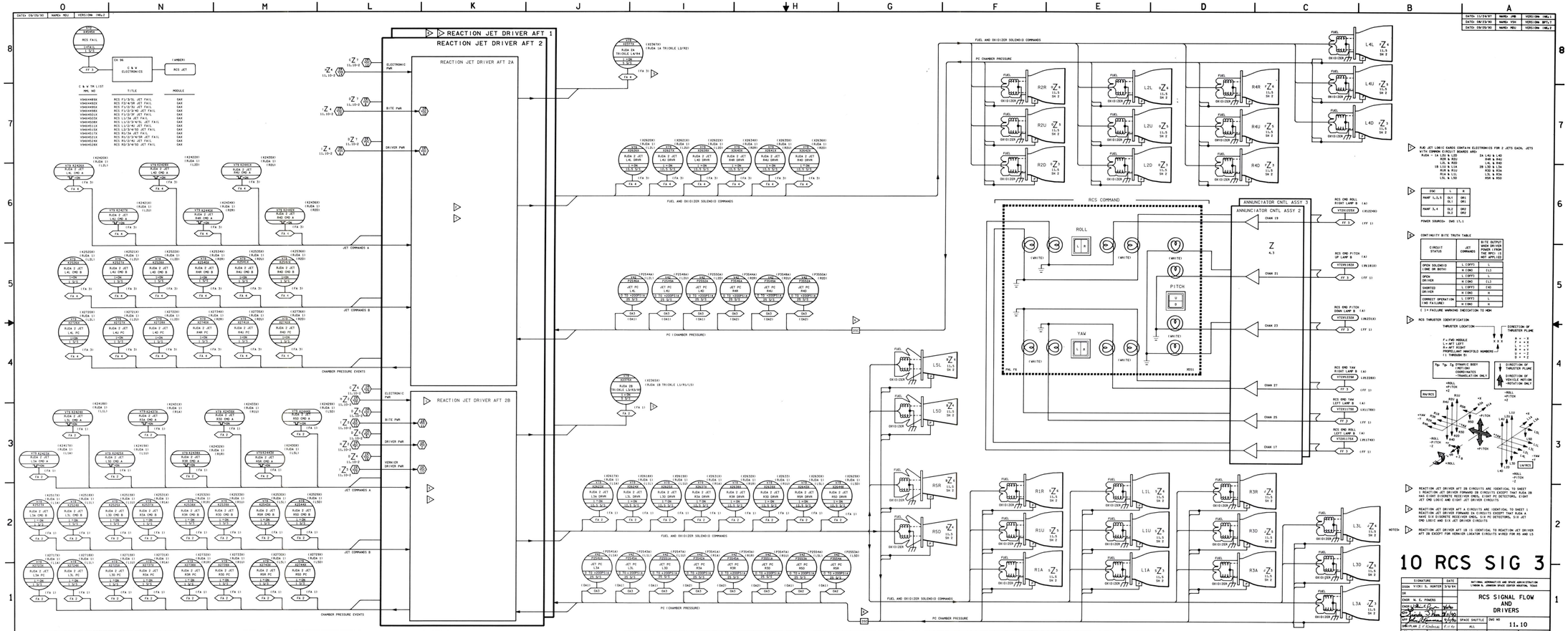
REACTION JET DRIVER AFT 1
REACTION JET DRIVER AFT 2
REACTION JET DRIVER AFT 2A
REACTION JET DRIVER AFT 2B
RCS FAIL
C & W ELECTRONICS
RCS JET
C & W TM LIST
TITLE
MODULE
JET COMMANDS A
JET COMMANDS B
CHAMBER PRESSURE EVENTS
FUEL AND OXIDIZER SOLENOID COMMANDS
PC (CHAMBER PRESSURE)
PC CHAMBER PRESSURE
RCS COMMAND
ANNUNCIATOR CNTL ASSY 3
ANNUNCIATOR CNTL ASSY 2
ROLL
PITCH
YAW
RJAD JET LOGIC CARDS CONTAIN ELECTRONICS FOR 2 JETS EACH, JETS WITH COMMON CIRCUITS BOARDED AREA
POWER SOURCES- DWG 11.1
CONTINUITY BITE TRUTH TABLE
RCS THRUSTER IDENTIFICATION
REACTION JET DRIVER AFT 2B CIRCUITS ARE IDENTICAL TO SHEET 1 REACTION JET DRIVER AFT 2A CIRCUITS EXCEPT THAT RJDA 2B HAS EIGHT DISCRETE RECEIVER ENDS, EIGHT PC DETECTORS, EIGHT JET CMD LOGIC AND EIGHT JET DRIVER CIRCUITS.
REACTION JET DRIVER AFT A CIRCUITS ARE IDENTICAL TO SHEET 1 REACTION JET DRIVER FORWARD 2A CIRCUITS EXCEPT THAT RJDA A HAVE SIX DISCRETE RECEIVER ENDS, SIX PC DETECTORS, SIX JET CMD LOGIC AND SIX JET DRIVER CIRCUITS.
REACTION JET DRIVER AFT 1B IS IDENTICAL TO REACTION JET DRIVER AFT 2B EXCEPT FOR VERNIER LOCATOR CIRCUITS WIRED FOR R5 AND L5
NOTES:
10 RCS SIG 3
RCS SIGNAL FLOW AND DRIVERS
SPACE SHUTTLE
DWG NO
11.10
BASIC REV E

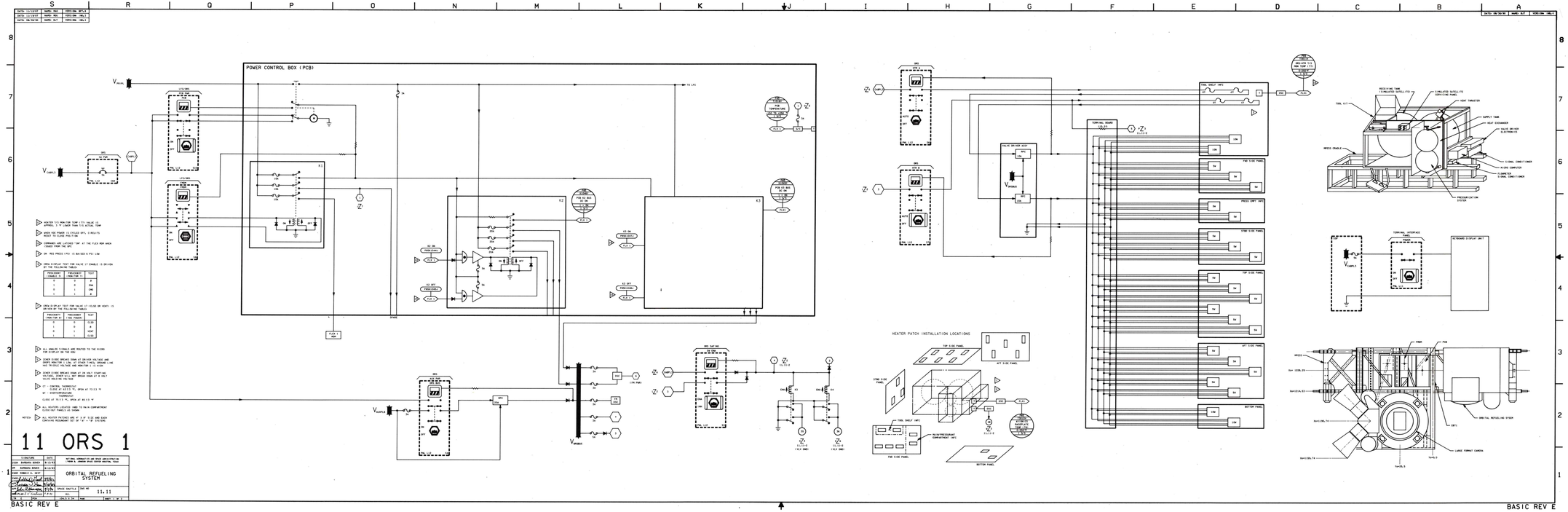

HEATER T/C MONITOR TEMP (T7) VALVE (3) APPROX 5°F LOWER THAN O/B MITTING TEMP

WHEN VDC POWER IS CYCLED OFF, CIRCUITS RESET TO CLOSE POSITION

COMMANDS ARE LATCHED 'ON' AT THE FLEX HOSE WHICH LEADS FROM THE APU

ON MID PRESS (PS) IS 84/320 & PS) LOW

CRT# DISPLAY TEST FOR VALVE (7 ENABLE IS DRIVEN BY THE FOLLOWING TABLE):

PRESSURE ENABLE (1)	PRESSURE MONITOR (1)	TEST
0	0	A
1	0	ON
0	1	A
1	1	A

CRT# DISPLAY TEST FOR VALVE (7 (1) (2) OR VENT) (3 DRIVEN BY THE FOLLOWING TABLE):

PRESSURE ENABLE (1)	PRESSURE MONITOR (1)	TEST
0	0	A
1	0	A
0	1	VENT
1	1	N/A

ALL ANALOG SIGNALS ARE ROUTED TO THE MI/DSS FOR DISPLAY ON THE SDU.

ZENER DIODE BREAKS DOWN AT 28 VOLT STARTING VOLTAGE, ZENER WILL NOT BREAK DOWN AT 8 VOLT VALVE HEATING VOLTAGE

CT - CONTROL THERMOSTAT
CLOSE AT 75±3 °F, OPEN AT 73 ±3 °F
OT - OVERTEMPERATURE THERMOSTAT
CLOSE AT 75±3 °F, OPEN AT 85±3 °F

ALL HEATERS LOCATED (WIRED TO MAIN COMPARTMENT CLOSE-OUT PANELS W/ SHOWN.

NOTES: ALL HEATER PATCHES ARE 4" X 8" 5/32 AWG AND EACH CONTAINS REDUNDANT SET OF 3-4" = 18 SYSTEMS

11 ORS 1

SIGNATURE	DATE	NOTICE: INFORMATION ON THIS DRAWING IS PROPRIETARY AND MAY BE SUBJECT TO EXPORT CONTROL LAWS
ITEM: BARBARA BEACH	9-13-83	
DR: BARBARA BEACH	9-13-83	
CHECK: ROBERT G. SCOTT		ORBITAL REFUELING SYSTEM
ENGINEER:		
MFG:		
QUALITY ASSURANCE:		
CUSTOMER ACCEPTANCE:		
APPROVED BY:		

SPACE SHUTTLE | DWG NO: 11.11 | ALL | SCALE: 3/4 | SHEET 1 OF 2

BASIC REV E

BASIC REV E

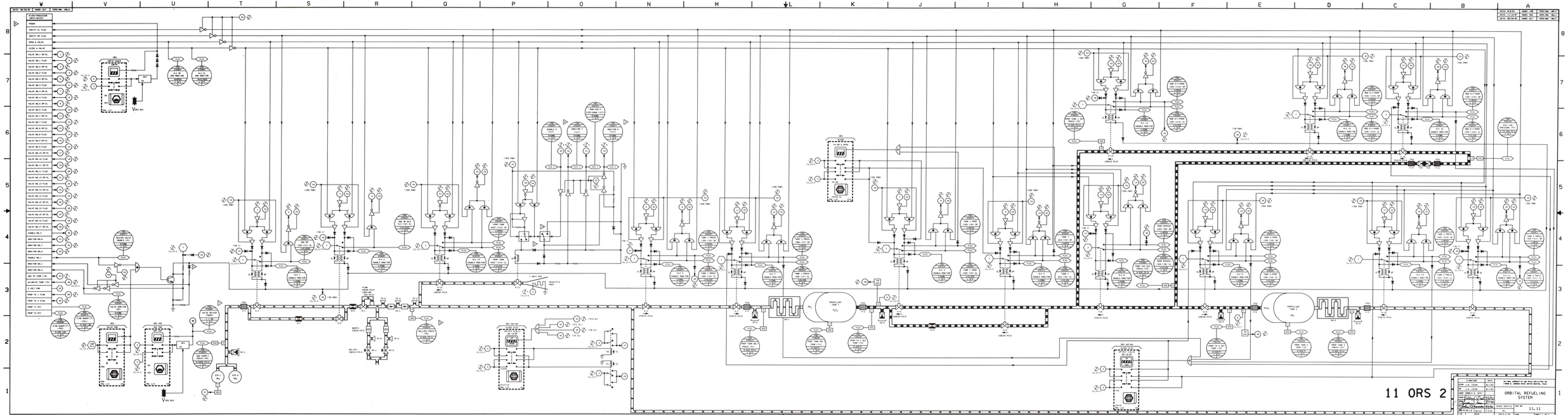
11 ORS 2
ORBITAL REFUELING SYSTEM
BASIC REV E
BASIC REV E

FOR DETAILED COMPONENT AND LOGIC INFORMATION REFER TO:

SSSH DWG NO.	SSSH DWG TITLE	VENDOR NAME	VENDOR DWG NO.	VENDOR SHEET NO.	REV	DATE	VENDOR DRAWING TITLE
11.1 (SHEET 1)	OMS/RCS INTERCONNECT LEFT POD	R.I.	VS70-943099	1-61	A A/EOB17	8/18/88	INTEGRATED SYSTEM SCHEMATIC AFT, OMS/RCS
		R.I.	VS70-420309	1-14	D	6/19/84	SCHEMATIC DIAGRAM - OMS SUBSYSTEM CONTROL LEFT POD
		R.I.	VS70-430302	1-14	E	8/23/88	SCHEMATIC DIAGRAM - OMS SUBSYSTEM CONTROL LEFT POD
		R.I.	VS70-430309	1-14	E	8/23/88	SCHEMATIC DIAGRAM - OMS SUBSYSTEM CONTROL LEFT POD
		R.I.	VS70-420302	1-13	G	8/8/88	SCHEMATIC DIAGRAM - OMS SUBSYSTEM CONTROL LEFT POD
11.1 (SHEET 2)	OMS/RCS	R.I.	VS70-943099	1-61	A A/EOB17	8/18/88	INTEGRATED SYSTEM SCHEMATIC AFT, OMS/RCS
		R.I.	VS70-420202	1-11	F	7/28/88	SCHEMATIC DIAGRAM - OMS SUBSYSTEM CONTROL RIGHT POD
		R.I.	VS70-420209	1-12	C	4/3/80	SCHEMATIC DIAGRAM - OMS SUBSYSTEM CONTROL RIGHT POD
		R.I.	VS70-430202	1-12	E	8/1/84	SCHEMATIC DIAGRAM - OMS SUBSYSTEM CONTROL RIGHT POD
		R.I.	VS70-430209	1-12	B	8/3/82	SCHEMATIC DIAGRAM - OMS SUBSYSTEM CONTROL RIGHT POD

DWG	SIGNATURE	DATE	DWG	SIGNATURE	DATE
11.1-1,2	ENGR D. LENORT			ENGR	
	ENGR Dean Lenort	9/11/90		ENGR	
	ENGR			ENGR	
	ENGR			ENGR	
	ENGR			APP Linda Shan	9/11/90
	ENGR			APP John O Kamman	9/11/90
	ENGR			OMNIPLAN	
	ENGR			LTR E	PCN

NATIONAL AERONAUTICS AND SPACE ADMINISTRATION
LYNDON B. JOHNSON SPACE CENTER HOUSTON, TEXAS

VENDOR DRAWING REFERENCES

SPACE SHUTTLE	TBL NO 11-I
ALL	
PAGE II.I-1	SHEET 1 OF 6

BASIC REV E

FOR DETAILED COMPONENT AND LOGIC INFORMATION REFER TO:

SSSH DWG NO.	SSSH DWG TITLE	VENDOR NAME	VENDOR DWG NO.	VENDOR SHEET NO.	REV	DATE	VENDOR DRAWING TITLE
11.2	OMS GAUGING	SIMMONDS PRECISION	1550420-002	1	B	3/27/85	SCHEM DIAG, OMS TOTALIZER VOLTAGE REGULATORS, FU
		SIMMONDS PRECISION	1550421-001	1,2	A	3/27/85	SCHEM DIAG, OMS TOTALIZER CONTROL LOGIC, FU
		SIMMONDS PRECISION	1550422-002	1,2	D	5/20/88	SCHEM DIAG, OMS TOTALIZER AFT SIGNAL CHANNEL, FU
		SIMMONDS PRECISION	1550423-002	1,2	D	3/27/85	SCHEM DIAG, OMS TOTALIZER TOTAL SIGNAL CHANNEL, FU
		SIMMONDS PRECISION	1550424-002	1	A	3/27/85	SCHEM DIAG, OMS TOTALIZER ANALOG PROCESSOR, FU
		SIMMONDS PRECISION	1550425	1	L	7/1/88	SCHEM DIAG, OMS AFT PROBE ELECTRONICS, FU
		SIMMONDS PRECISION	1550426	1	L	10/11/88	SCHEM DIAG, OMS FWD PROBE ELECTRONICS, FU
		SIMMONDS PRECISION	1550430-002	1	C	3/27/85	SCHEM DIAG, OMS TOTALIZER VOLTAGE REGULATORS, OX
		SIMMONDS PRECISION	1550431-001	1,2	A	4/4/85	SCHEM DIAG, OMS TOTALIZER CONTROL LOGIC, OX
		SIMMONDS PRECISION	1550432-002	1,2	D	5/20/88	SCHEM DIAG, OMS TOTALIZER AFT SIGNAL CHANNEL, OX
		SIMMONDS PRECISION	1550433-002	1,2	E	5/20/88	SCHEM DIAG, OMS TOTALIZER TOTAL SIGNAL CHANNEL, OX
		SIMMONDS PRECISION	1550434-002	1	A	3/27/85	SCHEM DIAG, OMS TOTALIZER ANALOG PROCESSOR, OX
		SIMMONDS PRECISION	1550435	1	K	7/5/88	SCHEM DIAG, OMS AFT PROBE ELECTRONICS, OX
		SIMMONDS PRECISION	1550436	1	K	7/5/88	SCHEM DIAG, OMS FWD PROBE ELECTRONICS, OX
		SIMMONDS PRECISION	1550440	1	D	8/23/78	SCHEM DIAG, OMS TOTALIZER POWER COMPONENTS
		SIMMONDS PRECISION	1550475	1	B	3/27/88	BLOCK DIAGRAM, OMS FUEL SYSTEM
		SIMMONDS PRECISION	1550448-001	1-35			OMS TOTALIZER WIRING LIST
		SIMMONDS PRECISION	1550476	1	B	3/27/88	BLOCK DIAGRAM, OMS OXIDIZER SYSTEM
		SIMMONDS PRECISION	1550478-001	1	BAS	5/14/79	INSTALLATION DIAGRAM, ELECTRICAL OMS GAUGING SYSTEM
		R.I.	VS70-973102	8,9	F-EO/ 6-03	6/21/90	INTEGRATED SCHEMATIC, DISP & CONT OV-102
		R.I.	VS70-973099	8,9	A-EO/ B03	4/25/90	INTEGRATED SCHEMATIC, DISP & CONT OV-099, OV-103, OV-104
		R.I.	VS70-976102	11,18,22, 25,41	F-EO/ G17	3/23/90	INTEGRATED SCHEMATIC, EPD & C OV-102
		R.I.	VS70-976099	11,18,22, 25,41	A EO/A15	3/14/90	INTEGRATED SCHEMATIC, EPD & C OV-099, OV-103, OV-104

DWG	SIGNATURE	DATE	DWG	SIGNATURE	DATE
11.2	ENGR B. C. LUNNEY			ENGR	
	ENGR Bryan Lunney	9/11/90		ENGR	
	ENGR			ENGR	
	ENGR			ENGR	
	ENGR			APP Linda J Hart	9/11/90 ~~7/8/88~~
	ENGR			APP John A Kamman	9/11/90
	ENGR			OMNIPLAN	
	ENGR			LTR E PCN	

NATIONAL AERONAUTICS AND SPACE ADMINISTRATION
LYNDON B. JOHNSON SPACE CENTER HOUSTON, TEXAS

VENDOR DRAWING REFERENCES

SPACE SHUTTLE	TBL NO 11-I
ALL	
	PAGE 11.I-2 SHEET 2 OF 6

BASIC REV E

FOR DETAILED COMPONENT AND LOGIC INFORMATION REFER TO:

SSSH DWG NO.	SSSH DWG TITLE	VENDOR NAME	VENDOR DWG NO.	VENDOR SHEET NO.	REV	DATE	VENDOR DRAWING TITLE
11.3 (SHEET 1)	OMS/DRIVERS	ROCKWELL	VS70-430302	1-14	E	8/23/88	SCHEMATIC DIAGRAM - OMS SUBSYSTEM CONTROL LEFT POD
		ROCKWELL	VS70-430202	1-12	E	7/13/84	SCHEMATIC DIAGRAM - OMS SUBSYSTEM CONTROL RIGHT POD
		ROCKWELL	VS70-760709	1-11	D	8/29/86	SCHEMATIC DIAGRAM - MOTOR CONTROL ASSY POWER DISTRIBUTION
11.3 (SHEET 2)	ORBITAL MANEUVERING SYSTEM	ROCKWELL	VS70-430302	1-14	E	8/23/88	SCHEMATIC DIAGRAM - OMS SUBSYSTEM CONTROL LEFT POD
		ROCKWELL	VS70-430202	1-12	E	7/13/84	SCHEMATIC DIAGRAM - OMS SUBSYSTEM CONTROL RIGHT POD
		ROCKWELL	VS70-430209	1-12	B	8/3/82	SCHEMATIC DIAGRAM - OMS SUBSYSTEM CONTROL RIGHT POD
		ROCKWELL	VS70-430309	1-14	E	8/23/88	SCHEMATIC DIAGRAM - OMS SUBSYSTEM CONTROL LEFT POD
		ROCKWELL	VS70-943099	6-25	A EO/B17	8/18/88	INTEGRATED SYSTEM SCHEMATIC AFT PROPULSION SYSTEM, OMS/RCS
		ROCKWELL	MC284-0430	ALL	F	1/20/88	PROCUREMENT SPECIFICATION - VALVE, AC MOTOR OPERATED
		ROCKWELL	MC284-0421	ALL	E	6/2/82	PROCUREMENT SPECIFICATION - VALVE, RELIEF, BURST DISC AND POPPET ASSY
		ROCKWELL	MC284-0481	ALL	B	7/18/84	PROCUREMENT SPECIFICATION - VALVE, QUAD CHECK
		MDAC	73P620001	ALL	B	3/82	PROCUREMENT SPECIFICATION - VALVE, DC SOLENOID OPERATED HIGH PRESSURE
		MDAC	73P620002	ALL	D	10/82	PROCUREMENT SPECIFICATION - REGULATOR, HELIUM PRESSURE SERIES REDUNDANT
		MDAC	73P620004	ALL	A	4/79	PROCUREMENT SPECIFICATION - VALVE, DC SOLENOID OPERATED LOW PRESSURE
		AEROJET	118 6745	ALL	J	2/13/84	PROCUREMENT SPECIFICATION - 3-WAY CONTROL VALVE
		AEROJET	118 6443	ALL	B	6/12/85	FILTER ASSEMBLY, PROPELLANT LINE
		AEROJET	118 6775	ALL	G	8/8/84	PURGE VALVE ASSEMBLY
		AEROJET	118 6813	ALL	F	3/14/84	2-WAY FILL AND VENT VALVE
		AEROJET	118 6110	ALL	AJ	8/2/88	ENGINE SUB-ASSEMBLY ORBITAL MANEUVER SYSTEM
		JSC	18546		BASIC, A	2/16/86	
		JSC	08934	VOLUME 1, SECTION 3.4-3, 4.3	E	7/15/88	SHUTTLE OPERATIONS DATA BOOK - SHUTTLE SYSTEMS PERFORMANCE AND CONSTRAINTS DATA
11.4	AFT RCS/OMS INTERCONNECT	ROCKWELL	VS70-430302	4,5	E	8/23/88	CROSSFEED VALVE A,B
		ROCKWELL	VS70-430302	8	E	8/23/88	THRUST VECTOR CONTROL
		ROCKWELL	VS70-430302	14	E	8/23/88	THERMAL SENSORS
		ROCKWELL	VS70-430209	4,5	B	8/3/82	CROSSFEED VALVE A,B
		ROCKWELL	VS70-420302	6,7	G	8/8/88	CROSSFEED VALVES 1/2, 3/4/5
		ROCKWELL	VS70-420203	6,7	D	7/28/88	CROSSFEED VALVES 1/2, 3/4/5

DWG	SIGNATURE	DATE	DWG	SIGNATURE	DATE
11.3-1,2	ENGR ROBBIE D. GEST			ENGR	
	ENGR Robbie D Gest	9-11-90		ENGR	
11.4	ENGR B. BAKER			ENGR	
	ENGR Bobby Baker	9-11-90		ENGR	
	ENGR			APP Linda J Ham	9/11/90
	ENGR			APP John A Kamman	9/11/90
	ENGR			OMNIPLAN	
	ENGR			LTR E PCN	

NATIONAL AERONAUTICS AND SPACE ADMINISTRATION
LYNDON B. JOHNSON SPACE CENTER HOUSTON, TEXAS

VENDOR DRAWING REFERENCES

SPACE SHUTTLE	TBL NO 11-I
ALL	

BASIC REV E

FOR DETAILED COMPONENT AND LOGIC INFORMATION REFER TO:

SSSH DWG NO.	SSSH DWG TITLE	VENDOR NAME	VENDOR DWG NO.	VENDOR SHEET NO.	REV	DATE	VENDOR DRAWING TITLE
11.4 (CONT)		ROCKWELL	VS70-760709	9	D	8/25/90	AFT MCA-1, AFT MCA-2 OPERATIONAL STATUS, MDM INTERFACE
		ROCKWELL	VS70-760709	10	D	8/25/90	AFT MCA-3, OPERATIONAL STATUS, MDM INTERFACE
11.5	AFT RCS MODULE	R.I.	VS70-420209		C	6/20/84	SCHEMATIC DIAGRAM - AFT RCS SUBSYSTEM CONTROL RIGHT OMS POD
			VS70-420309		D	6/19/84	SCHEMATIC DIAGRAM - AFT RCS SUBSYSTEM CONTROL LEFT OMS POD
11.6 (SHEET 1)	FWD RCS MODULE	ROCKWELL	VS70-420109	1-11	B	6/24/82	SCHEMATIC DIAGRAM - RCS SUBSYSTEM CONTROL FWD MODULE
11.6 (SHEET 2)	FWD RCS MODULE	ROCKWELL	VS70-420109	1-11	B	6/24/82	SCHEMATIC DIAGRAM - RCS SUBSYSTEM CONTROL FWD MODULE (FOR MANIFOLD 1-4 COMPONENT AND LOGIC)
		ROCKWELL	VS70-420109	1-11	C	7/7/87	SCHEMATIC DIAGRAM - RCS SUBSYSTEM CONTROL FWD MODULE (FOR MANIFOLD 5 COMPONENT AND LOGIC INFORMATION)
11.7	FWD HTRS	R.I.	VS70-420102	ALL	G	1/11/85	SCHEMATIC DIAGRAM - RCS SUBSYSTEM FORWARD MODULE
		R.I.	VS70-420109	ALL	B	7/23/82	SCHEMATIC DIAGRAM - RCS SUBSYSTEM FORWARD MODULE
		R.I.	VS70-750092	ALL	A	4/13/83	SCHEMATIC DIAGRAM TPS/TCS OPERATIONAL INSTRUMENTATION (V09)
		R.I.	VS70-750099	ALL	C	4/23/84	SCHEMATIC DIAGRAM TPS/TCS OPERATIONAL INSTRUMENTATION (V09)
11.8	HTR OMS/RCS POD	R.I.	VS70-420202	ALL	D	7/27/87	SCHEMATIC DIAGRAM - AFT RCS SUBSYSTEM CONTROL RIGHT OMS POD
		R.I.	VS70-420209	ALL	C	6/20/84	SCHEMATIC DIAGRAM - AFT RCS SUBSYSTEM CONTROL RIGHT OMS POD
		R.I.	VS70-420302	ALL	E	6/25/84	SCHEMATIC DIAGRAM - AFT RCS SUBSYSTEM CONTROL LOMS POD
		R.I.	VS70-420309	ALL	D	6/4/84	SCHEMATIC DIAGRAM - AFT RCS SUBSYSTEM CONTROL LOMS POD
		R.I.	VS70-430202	ALL	E	8/1/84	SCHEMATIC DIAGRAM - OMS SUBSYSTEM CONTROL RIGHT POD
		R.I.	VS70-430209	ALL	B	8/25/82	SCHEMATIC DIAGRAM - OMS SUBSYSTEM CONTROL RIGHT POD
		R.I.	VS70-430302	ALL	D	7/12/84	SCHEMATIC DIAGRAM - OMS SUBSYSTEM CONTROL LEFT POD
		R.I.	VS70-430309	ALL	D	7/2/84	SCHEMATIC DIAGRAM - OMS SUBSYSTEM CONTROL LEFT POD
11.9	HTR AFT OMS/RCS	R.I.	V570-430302	ALL	D	7/12/84	SCHEMATIC DIAGRAM - OMS SUBSYSTEM CONTROL LEFT POD
		R.I.	V570-430309	ALL	D	7/2/84	SCHEMATIC DIAGRAM - OMS SUBSYSTEM CONTROL LEFT POD
		R.I.	V070-435040	ALL	A	7/19/84	HEATER INSTL - OMS PROPELLANT CROSSFEED LINES
		R.I.	V070-435010	ALL	A	8/13/84	INSULATION INSTL - OMS PROPELLANT CROSSFEED

DWG	SIGNATURE	DATE	DWG	SIGNATURE	DATE
11.4	ENGR B. BAKER		11.8	ENGR T. LAZO	
	ENGR Dolly Baker	9-11-90		ENGR Thomas Lazo	9-11-90
11.5	ENGR C. COCHRAN		11.9	ENGR T. LAZO	
	ENGR Cynthia Cochran	9-11-90		ENGR Thomas Lazo	9-11-90
11.6 - 1, 2	ENGR C. CLEMENT			APP Brenda Davis	9/11/90
	ENGR Chad Clement	9-11-90		APP John Kammann	9/11/90
11.7	ENGR T. LAZO			OMMPLAN	
	ENGR Thomas Lazo	9-11-90		LTR E PCN	

NATIONAL AERONAUTICS AND SPACE ADMINISTRATION
LYNDON B. JOHNSON SPACE CENTER HOUSTON, TEXAS

VENDOR DRAWING REFERENCES

SPACE SHUTTLE	TBL NO 11-I	
ALL	PAGE II.I-4	SHEET 4 OF 6

BASIC REV E

FOR DETAILED COMPONENT AND LOGIC INFORMATION REFER TO:

SSSH DWG NO.	SSSH DWG TITLE	VENDOR NAME	VENDOR DWG NO.	VENDOR SHEET NO.	REV	DATE	VENDOR DRAWING TITLE
11.9 (CONT)		R.I.	V070-434221	ALL	A	11/17/86	HIGH POINT BLEED LINERS INSTL - OMS PROPELLANT (MID-BODY) INCREMENT
		RI.I.	VK70-434111	ALL		2/13/86	HIGH POINT BLEED LINES INSTL - CENTAUR KIT
11.10 (SHEET 1)	RCS SIGNAL FLOW AND DRIVERS	R.I.	VS70-420102	ALL	H	8/26/87	RCS SUBSYSTEM CONTROL FORWARD MODULE
		R.I.	VS70-420109	ALL	D	2/8/86	RCS SUBSYSTEM CONTROL FORWARD MODULE
		R.I.	VS70-973099	8	A	6/19/87	ORBITER DISPLAY AND CONTROL PANEL CONFIGURATION
		R.I.	VS70-973102	8	F	11/30/87	ORBITER DISPLAY AND CONTROL PANEL CONFIGURATION
		HONEYWELL	340243230	2.0	E	6/13/77	ISOLATE/RECTIFIER
		HONEYWELL	340243240	2.0	J	8/5/76	RJD DC POWER SUPPLY
		HONEYWELL	34024428	1.0	A	4/17/80	COMPONENT BOARD ASSY - CLOCK & LOGIC
		HONEYWELL	34024426	2.0	B	2/11/81	JET LOGIC
		HONEYWELL	34024406	2.0	-	3/11/80	HEAT SINK ASSY - UPPER
		HONEYWELL	34024408	2.0	-	5/28/80	HEAT SINK ASSY - LOWER
		HONEYWELL	C12268	4	A	4/17/81	RJDF INTERCONNECT
		HONEYWELL	C11268	6	A	4/17/81	RJDP POWER AND GROUND
		HONEYWELL	C12268	7	A	4/21/81	RJDA/RJDF BLOCK DIAGRAM
11.10 (SHEET 2)	RCS SIGNAL FLOW AND DRIVERS	R.I.	VS70-420302	ALL	F	7/6/88	AFT RCS SUBSYSTEM CONTROL RIGHT OMS POD
		R.I.	VS70-420202	ALL	G	7/26/88	AFT RCS SUBSYSTEM CONTROL LEFT OMS POD
		R.I.	VS70-420209	ALL	C	6/4/84	AFT RCS SUBSYSTEM CONTROL RIGHT OMS POD
		R.I.	VS70-420309	ALL	E	8/23/88	AFT RCS SUBSYSTEM CONTROL LEFT OMS POD
11.10 (SHEET 3)	RCS SIGNAL FLOW AND DRIVERS	R.I.	VS70-420202	ALL	F	7/6/88	AFT RCS SUBSYSTEM CONTROL RIGHT OMS POD
		R.I.	VS70-420302	ALL	G	7/26/88	AFT RCS SUBSYSTEM CONTROL LEFT OMS POD
		R.I.	VS70-420209	ALL	C	6/4/84	AFT RCS SUBSYSTEM CONTROL RIGHT OMS POD
		R.I.	VS70-420309	ALL	E	8/23/88	AFT RCS SUBSYSTEM CONTROL LEFT OMS POD
		HONEYWELL	34024410	2.1	A	5/4/81	RJDA SOLENOID DRIVER
		HONEYWELL	C12268	3	A	4/17/81	RJDA INTERCONNECT
		HONEYWELL	C12268	5	A	4/17/81	RJDA POWER AND GROUNDS

DWG	SIGNATURE	DATE	DWG	SIGNATURE	DATE
11.9	ENGR T. LAZO			ENGR	
	ENGR Thomas Lazo	9-10-90		ENGR	
11.10-	ENGR W. POWERS			ENGR	
1,2,3	ENGR William E Powers	9/11/90		ENGR	
	ENGR			APP Linda D Dan	9/11/90
	ENGR			APP John A Kamman	9/11/9
	ENGR			OMNIPLAN	
	ENGR			LTR E	PCN

NATIONAL AERONAUTICS AND SPACE ADMINISTRATION
LYNDON B. JOHNSON SPACE CENTER HOUSTON, TEXAS

VENDOR DRAWING REFERENCES

SPACE SHUTTLE	TBL NO 11-I
ALL	PAGE 11.I-5 SHEET 5 OF 6

BASIC REV E

FOR DETAILED COMPONENT AND LOGIC INFORMATION REFER TO:

SSSH DWG NO.	SSSH DWG TITLE	VENDOR NAME	VENDOR DWG NO.	VENDOR SHEET NO.	REV	DATE	VENDOR DRAWING TITLE
11.11	ORS	NASA/JSC	SED 39116942	①	N/A	6/26/84	ORS FLIGHT COMPUTER
		NASA/JSC	SID 36132449	①	N/A	3/9/84	ORS STANDARD SWITCH PANEL LOGIC BOX FUNCTIONAL DIAGRAM
		NASA/JSC	SED 39115875		N/A	7/12/84	ORS HEATER/FLUID SYSTEM
		NASA/JSC	SID 39116232	①	N/A	7/30/84	DRAWING TREE, ORS FOR ORS AUX PANEL, KDU, VLV DRIVER, CABLING AND HEATER WIRING
		NASA/JSC	SED 39115875			7/12/84	ORS MECHANICAL, FLUIDS, AND THERMAL
		R.I.	MC476-0147		D	3/28/84	ORS DEDICATED SIGNAL CONDITIONER
		R.I.	MC476-0134		B	9/17/87	ORS FLOWMETER SIGNAL CONDITIONER

① JSC DRAWINGS WERE RETIRED BY THE ORIGINATING ORGANIZATIONS IN 1987. JM2/ENGINEERING DRAWING CONTROL HAS SENT THEM TO FORT WORTH, TX FOR LONG TERM STORAGE.

DWG	SIGNATURE	DATE	DWG	SIGNATURE	DATE
11.11	ENGR ROBBIE D. GEST			ENGR	
	ENGR Robbie D Gest	9-11-90		ENGR	
	ENGR			ENGR	
	ENGR			ENGR	
	ENGR			APP Linda J. Hamm	9/11/90
	ENGR			APP John A. Kammar	9/11/90
	ENGR			OMNIPLAN	
	ENGR			LTR E PCN	

NATIONAL AERONAUTICS AND SPACE ADMINISTRATION
LYNDON B. JOHNSON SPACE CENTER HOUSTON, TEXAS

VENDOR DRAWING REFERENCES

SPACE SHUTTLE	TBL NO 11-I
ALL	
	PAGE 11.I-6 SHEET 6 OF 6

BASIC REV E

12. APU/HYDRAULICS SYSTEMS

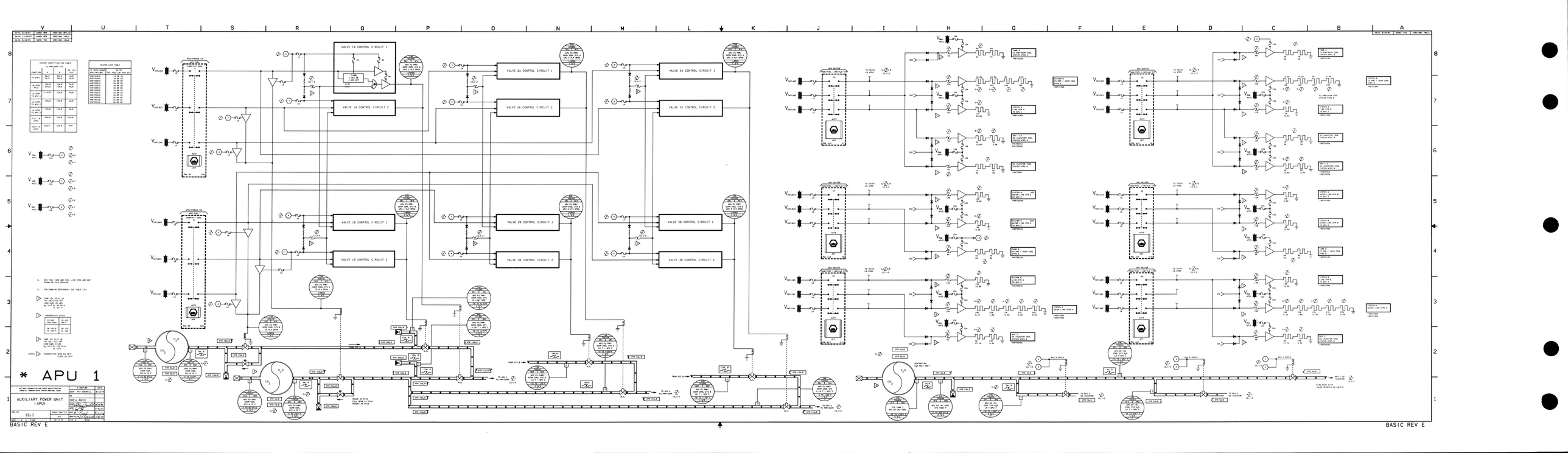
* APU 1
AUXILIARY POWER UNIT (APU)
VALVE 1A CONTROL CIRCUIT 1
VALVE 1A CONTROL CIRCUIT 2
VALVE 2A CONTROL CIRCUIT 1
VALVE 2A CONTROL CIRCUIT 2
VALVE 3A CONTROL CIRCUIT 1
VALVE 3A CONTROL CIRCUIT 2
VALVE 1B CONTROL CIRCUIT 1
VALVE 1B CONTROL CIRCUIT 2
VALVE 2B CONTROL CIRCUIT 1
VALVE 2B CONTROL CIRCUIT 2
VALVE 3B CONTROL CIRCUIT 1
VALVE 3B CONTROL CIRCUIT 2
HEATER IDENTIFICATION TABLE
HEATER LOAD TABLE
BASIC REV E

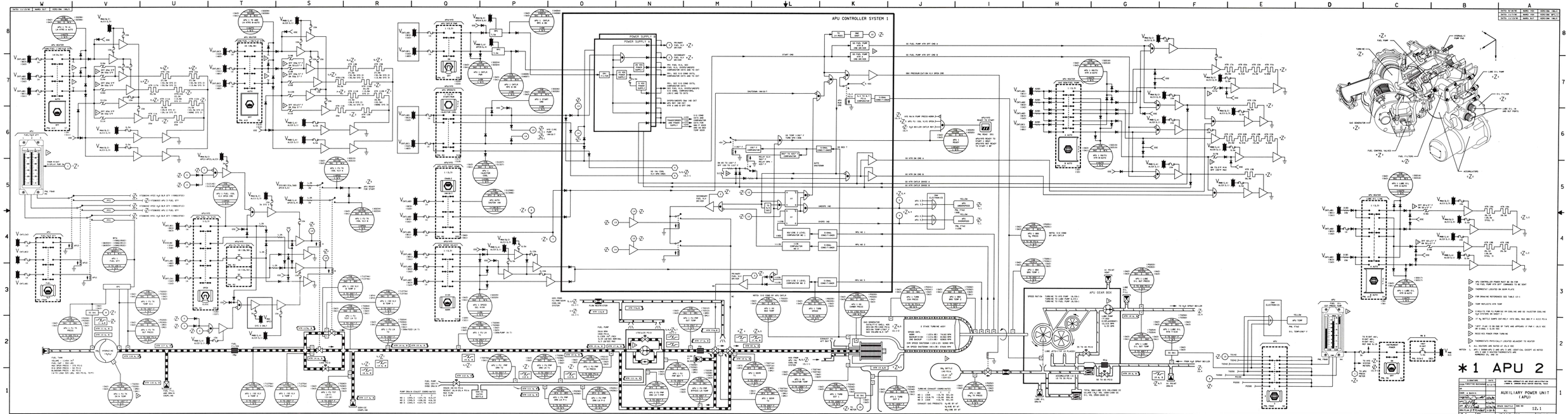
APU CONTROLLER SYSTEM 1
POWER SUPPLY 1
APU GEAR BOX
*1 APU 2
AUXILIARY POWER UNIT (APU)
SPACE SHUTTLE
12.1
BASIC REV E

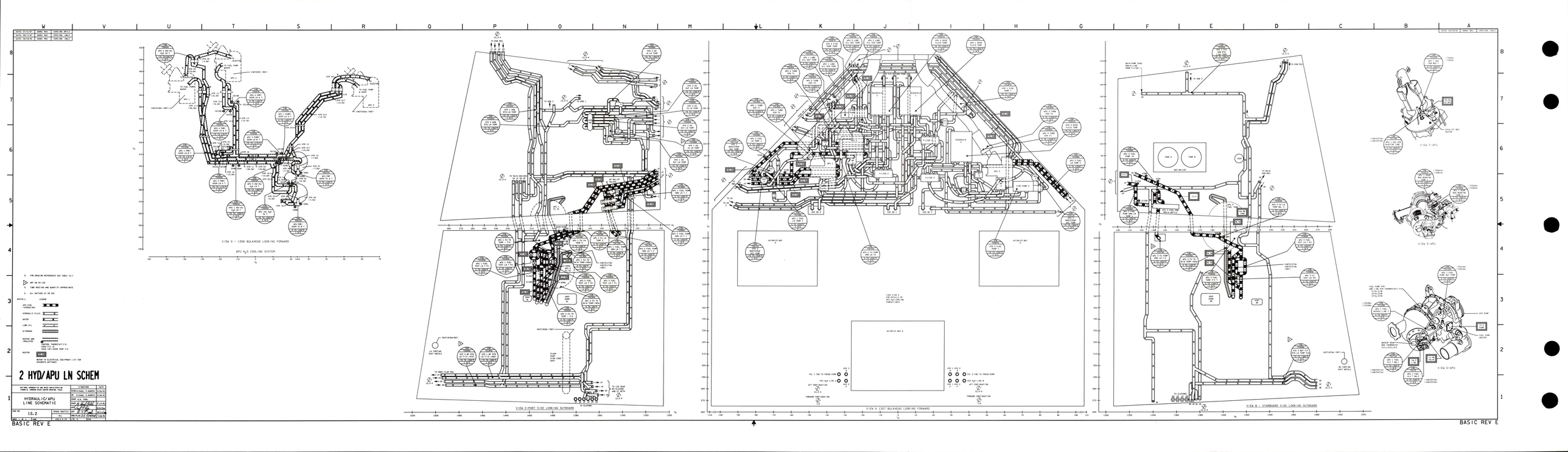

VIEW G - 1306 BULKHEAD LOOKING FORWARD
APU H2O COOLING SYSTEM
VIEW C-PORT SIDE LOOKING OUTBOARD
VIEW A 1307 BULKHEAD LOOKING FORWARD
VIEW B - STARBOARD SIDE LOOKING OUTBOARD
VIEW F-APU
VIEW E-APU
VIEW D-APU
2 HYD/APU LN SCHEM
HYDRAULIC/APU LINE SCHEMATIC
12.2
BASIC REV E

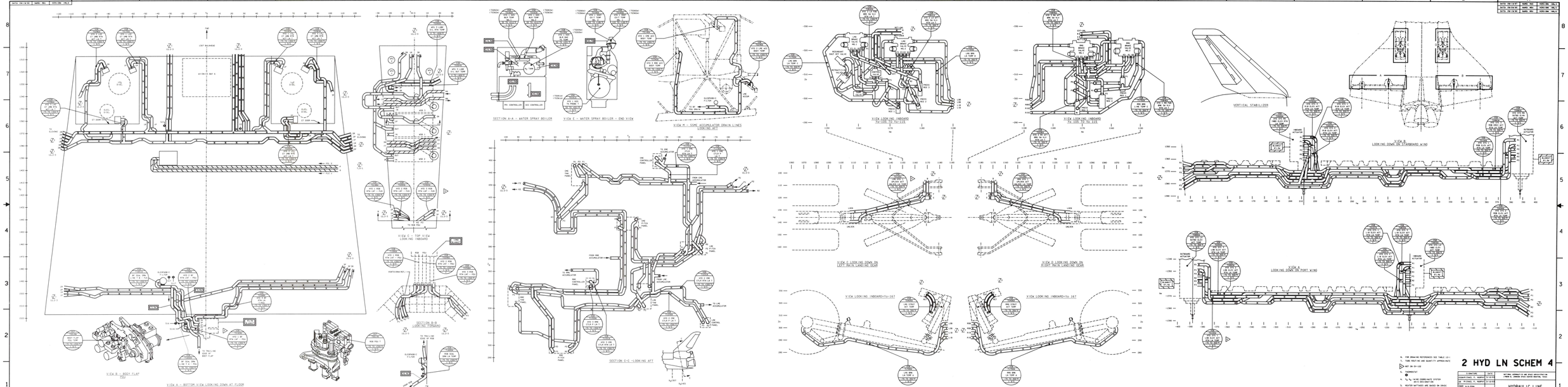
VIEW A – BOTTOM VIEW LOOKING DOWN AT FLOOR
VIEW B – BODY FLAP
VIEW C – TOP VIEW LOOKING INBOARD
VIEW D – RUDDER SPEED BRAKE
SECTION A-A – WATER SPRAY BOILER
VIEW E – WATER SPRAY BOILER – END VIEW
SECTION B-B LOOKING FORWARD
SECTION C-C –LOOKING AFT
VIEW L
VIEW M – SOME ACCUMULATOR DRAIN LINES LOOKING AFT
VIEW LOOKING INBOARD Y=-108 TO Y=-114
VIEW LOOKING INBOARD Y=-100 TO Y=-106
VIEW G LOOKING DOWN ON LEFT MAIN LANDING GEAR
VIEW H LOOKING DOWN ON RIGHT MAIN LANDING GEAR
VIEW LOOKING INBOARD=Y=-167
VIEW LOOKING INBOARD=Y=167
VERTICAL STABILIZER
VIEW K LOOKING DOWN ON PORT WING
VIEW N LOOKING DOWN ON STARBOARD WING
2 HYD LN SCHEM 4
HYDRAULIC LINE SCHEMATIC
BASIC REV E

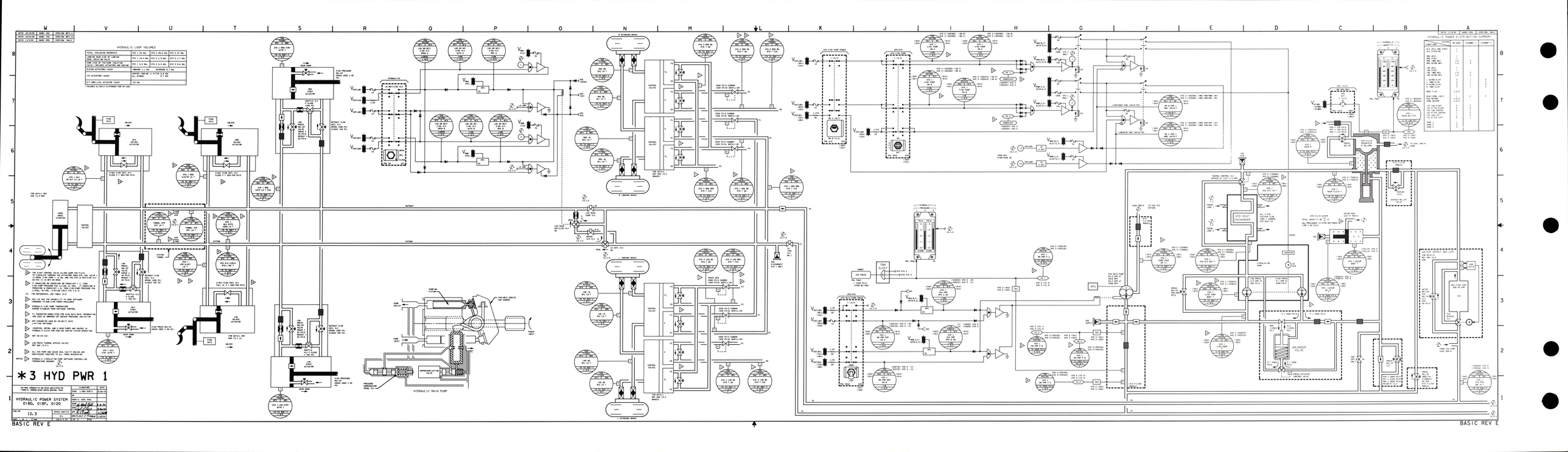

HYDRAULIC LOOP VOLUMES
HYDRAULIC POWER DISTRIBUTION SUMMARY
HYD HEAT EXCHANGER
WATER SPRAY BOILER
UNLOADER VALVE
HYDRAULIC MAIN PUMP
*3 HYD PWR 1
HYDRAULIC POWER SYSTEM
018D, 018F, 0120
12.3
BASIC REV E
BASIC REV E

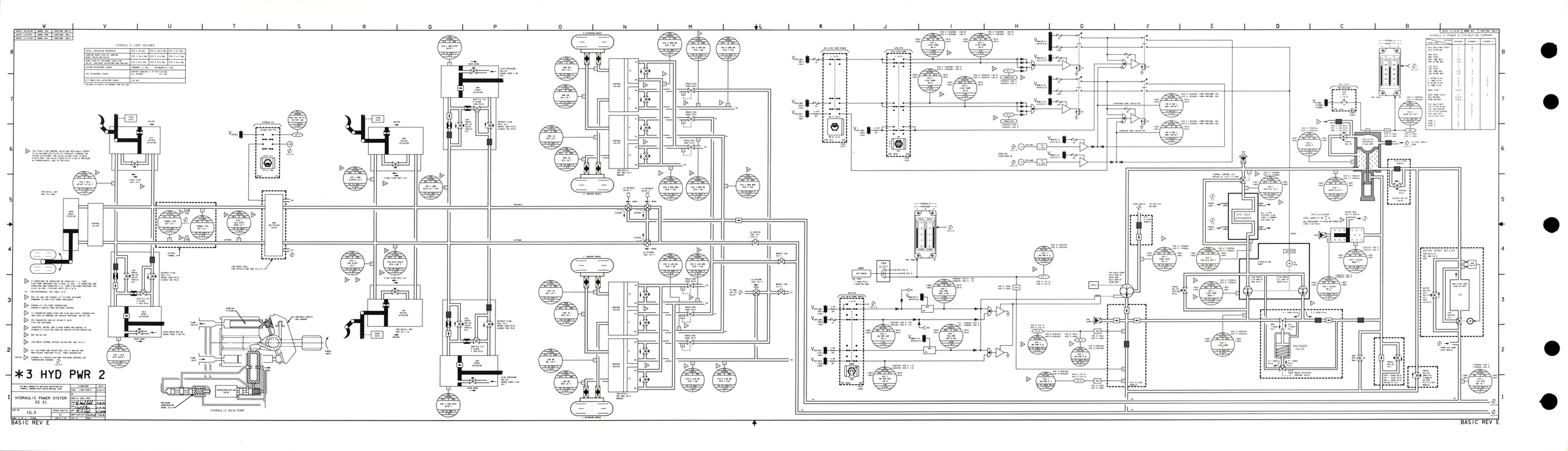
*3 HYD PWR 2
HYDRAULIC POWER SYSTEM
OI 21
12.3
BASIC REV E
HYDRAULIC LOOP VOLUMES
HYDRAULIC MAIN PUMP
HYDRAULIC POWER DISTRIBUTION SUMMARY
BASIC REV E

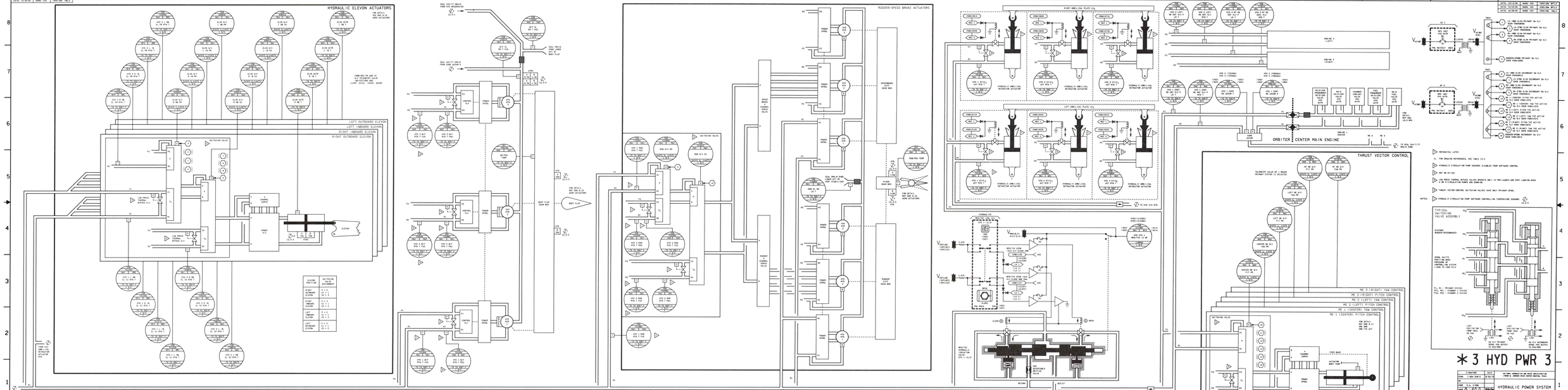
HYDRAULIC ELEVON ACTUATORS
LEFT OUTBOARD ELEVON
LEFT INBOARD ELEVON
RIGHT INBOARD ELEVON
RIGHT OUTBOARD ELEVON
RUDDER/SPEED BRAKE ACTUATORS
ORBITER CENTER MAIN ENGINE
THRUST VECTOR CONTROL
TYPICAL SWITCHING VALVE ASSEMBLY
* 3 HYD PWR 3
HYDRAULIC POWER SYSTEM
12.3
BASIC REV E

DATE> 11/25/87	NAME> MAG	VERSION> INH,1
DATE> 09/04/90	NAME> SEV	VERSION> BF1,9
DATE> 09/20/90	NAME> MAG	VERSION> INH,2

BODY FLAP HEATERS

HEATER WATTAGE AT 25VDC
"A" AND "B"

ELEVON ACTUATOR HEATERS

HEATER WATTAGE AT 25VDC
"A" AND "B"

CONTROL TEMPERATURE (CT)
SYS "A" 0°F ±5°F TO 15°F ±5°F
SYS "B" -15°F ±5°F TO 0°F ±5°F
OVER TEMPERATURE (OT)
235 ±5°F TO 250 ±5°F

RUDDER/SPEEDBRAKE HEATERS

HEATER WATTAGE AT 28VDC
"A" AND "B"

CONTROL TEMPERATURE (CT)
SYS "A" CLOSE -25°F ±5°F
SYS "B" CLOSE -10°F ±5°F
OPEN -10°F ±5°F
OPEN 5°F ±5°F
OVER TEMPERATURE (OT)
CLOSE 120°F ±10°F
OPEN 150°F ±10°F

AFT FUSELAGE HYDRAULIC HEATERS

HEATER WATTAGE AT 28.5VDC
"A" AND "B"

BRAKE AND TUNNEL LINE HEATERS

HEATER WATTAGE AT 28VDC
"A", "B", AND "C"

ROB BK LN 2-21 WATTS
ROB BK LN 4-22 WATTS
RIB BK LN 1-20 WATTS
RIB BK LN 3-21 WATTS
LIB BK LN 3-21 WATTS
LIB BK LN 1-20 WATTS
LOB BK LN 4-21 WATTS
LOB BK LN 2-22 WATTS
HYD SYSTEM 1 TUNNEL RET LINE 10 WATTS
HYD SYSTEM 1 TUNNEL EXT LINE 10 WATTS

CIRC PUMP SOFTWARE CONSTANTS

ACCUMULATOR PRESSURE MGMT SOFTWARE

NAME	ID NUMBER	PRESET VALUE	UNITS
HYD SYS 1 GND ACCUM PRESS L/L	V92P1740C	1960	PSIA
HYD SYS 2 GND ACCUM PRESS L/L	V92P1834C	1960	PSIA
HYD SYS 3 GND ACCUM PRESS L/L	V92P1932C	1960	PSIA
HYS SYS ACCUM PRESS TIMER	V92W1747C	2	MINUTES

HYD THERMAL CONDITIONING SOFTWARE

NAME	ID NUMBER	PRESET VALUE	UNITS
HYD 1 CIRC PUMP MINIMUM RUN TIME	V92W1746C	15	MINUTES
HYD 2 CIRC PUMP MINIMUM RUN TIME	V92W1745C	10	MINUTES
HYD 3 CIRC PUMP MINIMUM RUN TIME	V92W1746C	10	MINUTES
HYD CIRC PUMP START DELAY TIME	V92W1836C	1	MINUTES
HYD 1 CIRC PUMP PRESS L/L	V92P1742C	100	PSIA
HYD 2 CIRC PUMP PRESS L/L	V92P1842C	100	PSIA
HYD 3 CIRC PUMP PRESS L/L	V92P1942C	100	PSIA

HYDRAULIC CIRC PUMP TEMP SENSORS

SYSTEM	MSID	DESCRIPTION	(LOW) SW CONTROL	LIMITS (HIGH)
HYD SYSTEM 1	V58T0126A	HYD 1 MLG UPLK LN T		DISABLED
	V58T0143A	HYD 1 MLG EXTD 31020 LN T		DISABLED
	V58T0127A	HYD 1 MLG EXTD X858 LN T		DISABLED
	V58T0128A	HYD 1 RMG RTN T FUS		DISABLED
	V58T0129A	HYD 1 RMG EXTD LN T FUS		DISABLED
	V58T0146A	HYD 1 RMG BRK RTN T VW		DISABLED
	V58T0138A	HYD 1 RMG U/ACTR RTN T		DISABLED
	V58T0135A	HYD 1 LMG U/ACT RTN T		DISABLED
	V58T0144A	HYD 1 B/F RTN T FUS	0°F	20°F
	V58T0145A	HYD 1 B/F RTN T PDU		DISABLED
	V58T0158A	HYD 1 RIB ELEVON T		DISABLED
	V58T0153A	HYD 1 LOB ELEVON T	0°F	20°F
	V58T0154A	HYD 1 ROB ELEVON T	0°F	20°F
	V58T0137A	HYD 1 LIB ELEVON T		DISABLED
	V58T0156A	HYD 1 RSB RTN T FUS	0°F	20°F
	V58T0206A	HYD 1 RSB RTN T PDU	-10°F	20°F
HYD SYSTEM 2	V58T0296A	HYD 2 LMG BK RTN T FUS	0°F	20°F
	V58T0192A	HYD 2 RMG BK RTN T FUS	0°F	20°F
	V58T0293A	HYD 2 RMG RTN T VW	0°F	DISABLED
	V58T0141A	HYD 2 LMG BK RTN VW		20°F
	V58T0288A	HYD 2 B/F RTN T FUS	0°F	DISABLED
	V58T0289A	HYD 2 B/F RTN T PDU	-10°F	20°F
	V58T0294A	HYD 2 ROB ELEVON T	0°F	20°F
	V58T0933A	HYD 2 RIB ELEVON T		DISABLED
	V58T0883A	HYD 2 LOB ELEVON T		DISABLED
	V58T0857A	HYD 2 LIB ELEVON T	0°F	20°F
	V58T0284A	HYD 2 RSB RTN T FUS	0°F	20°F
	V58T0288A	HYD 2 RSB RTN T PDU	-10°F	20°F
HYD SYSTEM 3	V58T0393A	HYD 3 RMG BK RTN T FUS	0°F	20°F
	V58T0392A	HYD 3 LMG BK RTN T FUS	0°F	DISABLED
	V58T0845A	HYD 3 RMG BK RTN T VW	0°F	20°F
	V58T0842A	HYD 3 LMG BK RTN T VW	0°F	20°F
	V58T0698A	HYD 3 B/F RTN T FUS		DISABLED
	V58T0698A	HYD 3 B/F RTN T PDU	-10°F	20°F
	V58T0963A	HYD 3 ROB ELEVON T	0°F	DISABLED
	V58T0938A	HYD 3 RIB ELEVON T	0°F	20°F
	V58T0394A	HYD 3 LOB ELEVON T	0°F	20°F
	V58T0823A	HYD 3 LIB ELEVON T		DISABLED
	V58T0384A	HYD 3 RSB RTN T FUS		DISABLED
	V58T0388A	HYD 3 RSB RTN T PDU	-10°F	20°F

PASS CIRC-PUMP FDA PRE-CONDITIONING LOGIC

MESSAGE	MSID	L/S	LL	UL	PRECONDITION LOGIC
S87 THERMAL HYD	V58P0137A HYD 1 CP P	1	100	050	HYD CIRC PMP A=ON OR HYD CIRC PMP B=ON OR PMP GPC CMD = ON (V58S0139E = 1) (V58S0139E = 1) (V58K0142Y = 1)
		2	050	100	HYD CIRC PMP A=OFF AND HYD CIRC PMP B=OFF AND PMP GPC CMD = OFF (V58S0139E = 0) (V58S0139E = 0) (V58K0142Y = 0)
	V58P0237A HYD 2 CP P	1	100	050	HYD CIRC PMP B=ON OR HYD CIRC PMP C=ON OR PMP GPC CMD = ON (V58S0239E = 1) (V58S0239E = 1) (V58K0242Y = 1)
		1	100	050	HYD CIRC PMP B=OFF AND HYD CIRC PMP C=OFF AND PMP GPC CMD = OFF (V58S0239E = 0) (V58S0239E = 0) (V58K0242Y = 0)
	V58P0337A HYD 3 CP P	1	100	050	HYD CIRC PMP C=ON OR HYD CIRC PMP A=ON OR PMP GPC CMD = ON (V58S0339E = 1) (V58S0339E = 1) (V58K0342Y = 1)
		1	100	050	HYD CIRC PMP C=OFF AND HYD CIRC PMP A=OFF AND PMP GPC CMD = OFF (V58S0339E = 0) (V58S0339E = 0) (V58K0342Y = 0)
CIRC PUMP	THRML CNTRL CIRC PMP FLG ON	N/A	N/A	N/A	CIRC PUMP X THERMAL CNTLR SW FLAG SET "ON" AND CIRC PUMP PRESSURE ON SYS Y OR Z GREATER THAN THEIR CIRC PMP PRESSURE CONSTANTS (SYS 1=V92P1742C, SYS 2=V92P1842C, SYS 3=V92P1942C).

ENTER

IF OPS TRANSITION THEN

- TERMINATE CIRC PUMP SOFTWARE RUN COMMANDS
  V58K0142Y V58K0143Y
  V58K0242Y V58K0243Y
  V58K0342Y V58K0343Y
- SET PRIORITIES FOR ALL THREE SYSTEMS = 0
- SET CIRC PUMP ON/OFF INDICATIONS = "OFF"

DO FOR N = 1, 2, 3

IF HYD SYS (N) CIRC PUMP SW IN OPC THEN

IF HYD SYS (N) ACCUM PRESS FLAG = "OFF" THEN

IF HYD SYS (N) ACCUM PRESS < LOW LIMIT AND > 30 PSIA THEN

- ISSUE CIRC PUMP SOFTWARE RUN COMMANDS FOR HYD SYS (N)
- SET ACCUM PRESS FLAG FOR HYD SYS (N) TO "ON"
- TERMINATE CIRC PUMP SOFTWARE RUN COMMANDS FOR ALL SYS WITH ACCUM PRESS FLAG = "OFF"
- RESET REMAINING HYD SYS PRIORITIES IN NUMERICAL ORDER
- START ACCUM PRESS TIMER

ELSE

IF HYD SYS (N) ACCUM PRESS > LOW LIMIT AND ACCUM PRESS TIMER EXPIRED THEN

- TERMINATE HYD SYS (N) CIRC PUMP SOFTWARE RUN COMMANDS
- RESET HYD SYS (N) ACCUM PRESS FLAG TO "OFF"

ELSE

IF HYD SYS (N) IS SCHEDULED TO BE TURNED ON BY SOFTWARE THEN

- TERMINATE HYD SYS (N) CIRC PUMP SOFTWARE RUN COMMANDS
- RESET HYD SYS (N) ACCUM PRESS FLAG TO "OFF"
- SET HYD SYS (N) THERMAL PRIORITY = 0
- RESET REMAINING HYD SYS PRIORITIES IN NUMERICAL ORDER

IF NO HYD SYS ACCUM PRESS FLAGS = "ON"

RETURN

ACCUMULATOR PRESSURE MGMT SOFTWARE

HYD THERMAL CONDITIONING SOFTWARE

DO FOR N = 1, 2, 3

IF HYD SYS (N) CIRC PUMP SW IN OPC THEN

IF HYD SYS (N) PRIORITY = 0 (PUMP NOT ASSIGNED TO COMC ON) THEN

IF ONE OR MORE HYD SYS (N) TEMP SENSORS < LOW LIMIT THEN

PRIORITY ASSIGNMENT

- INCREMENT TOTAL PRIORITY ASSIGNMENT BY 1
- SET HYD SYS (N) PRIORITY EQUAL TO NEW TOTAL PRIORITY ASSIGNMENT

IF HYD SYS (N) PRIORITY = 1 THEN

START HYD CIRC PUMP START DELAY TIMER

ELSE

IF HYD SYS (N) IS SCHEDULED TO BE TURNED ON (PRIORITY > 0) THEN

CALL "PUMP TURN OFF" SEQUENCE

PUMP TURN ON SEQUENCE

ENTER

IF HYD CIRC PUMP START DELAY TIMER EXPIRED THEN

IF BOTH CIRC PUMP PRESS IN OTHER TWO HYD SYS < LOW LIMIT (NOT RUNNING) THEN

- ISSUE PRIORITY NO. 1 HYD SYS SOFTWARE RUN COMMANDS
- START TIMER FOR CIRC PUMP MINIMUM RUN TIME
- SET CIRC PUMP ON/OFF INDICATION = "ON"

ELSE

SM ALERT

CLASS 3 FAULT MESSAGE "HYD CIRC PUMP" WILL BE ISSUED

PRIORITY NO. 1 PUMP WILL NOT BE COMMANDED

RETURN

IF PRIORITY NO. 1 HAS BEEN ASSIGNED TO A HYD SYS

IF PRIORITY NO. 1 CIRC PUMP IS NOT RUNNING (CIRC PUMP ON/OFF IND = "OFF") THEN

CALL "PUMP TURN ON" SEQUENCE

ELSE

IF ALL TEMP SENSORS IN PRIORITY NO. 1 SYSTEM > HIGH LIMIT OR PRIORITY NO. 1 CIRC PUMP RUN TIME > MINIMUM RUN TIME AND PRIORITY NO. 2 HAS BEEN ASSIGNED

CALL "PUMP TURN OFF" SEQUENCE

RETURN

PUMP TURN OFF SEQUENCE

ENTER

FOR PRIORITY NO. 1 CIRC PUMP>

- TERMINATE HYD SYS SOFTWARE RUN COMMANDS
- SET PRIORITY = 0
- SET CIRC PUMP ON/OFF INDICATION = "OFF"

IF ANY OTHER HYD SYS PRIORITY > 0 (WAITING TO COME ON) THEN

- RESET HYD SYS PRIORITIES AND MAINTAIN THE SAME ORDER FOR TURN ON
- START HYD CIRC PUMP START DELAY TIMER FOR NEW PRIORITY NO. 1 HYD SYS

RETURN

4. FOR DRAWING REFERENCES, SEE TABLE 12-1

TUNNEL LINE HEATERS ARE ON SYSTEM A ONLY, AND ARE NOT ON OV-102

HYD TEMPERATURE LOW AND HIGH LIMITS, ACCUM PRESS LOW LIMIT, ACCUM PRESS TIMER, START UP TIME DELAY, PUMP MINIMUM RUN TIME, CIRC PUMP PRESS LOW LIMIT ALL ARE CHANGEABLE BY TMBU OR ONBOARD ITEM ENTRY - SEE TABLES FOR CONSTANT VALUES

LOW LIMIT MUST BE CHANGED BY ITEM ENTRY OR TMBU TO ALLOW SIMULTANEOUS MANUAL/OPC OPERATIONS

PUMP WOULD BE SCHEDULED FOR TURN ON IF ACCUM PRESS FLAG = ON OR IF PUMP WERE PRIORITY NO.1

NOTES: KSC COMMANDS ARE USED TO RUN THE CIRC PUMPS PRELAUNCH AND REMAIN SET "ON" UNTIL CLEARED BY THE OPS 2 INITIALIZATION

*3 HYD PWR 4

SIGNATURE	DATE	
DSOH VICKI S. DODETT	8/8/78	NATIONAL AERONAUTICS AND SPACE ADMINISTRATION LYNDON B. JOHNSON SPACE CENTER HOUSTON, TEXAS
DR. MONTA D. UNDIALES	1/27/87	
ENGR N. KARL PON	10-4-90	HYDRAULIC POWER SYSTEM
APP	10-4-90	
APP	10/4/90	SPACE SHUTTLE DWG NO 12.3
OPNTPLAN		ALL SHEET 4 OF 4
STA E	ITEM	66 X 34 PAGE

BASIC REV E

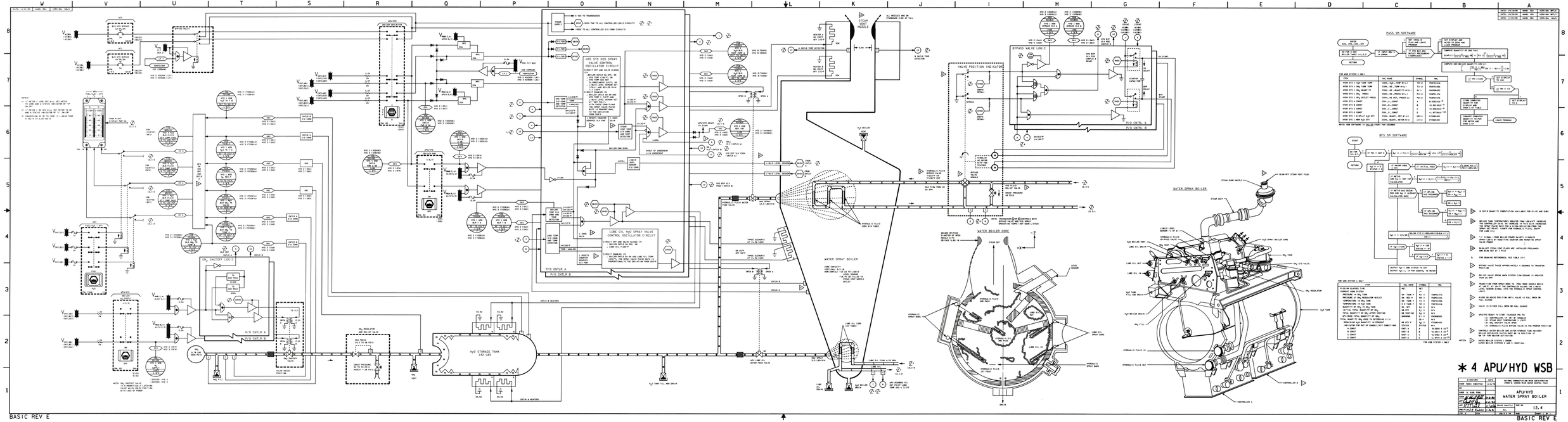

HYD SYS HOD SPRAY VALVE CONTROL OSCILLATOR CIRCUIT
LUBE OIL H2O SPRAY VALVE CONTROL OSCILLATOR CIRCUIT
H2O STORAGE TANK 142 LBS
WATER SPRAY BOILER
WATER BOILER CORE
BYPASS VALVE LOGIC
VALVE POSITION INDICATOR
PASS SM SOFTWARE
BFS SM SOFTWARE
* 4 APU/HYD WSB
APU/HYD
WATER SPRAY BOILER
12.4
BASIC REV E

FOR DETAILED COMPONENT AND LOGIC INFORMATION REFER TO:

SSSH DWG NO.	SSSH DWG TITLE	VENDOR NAME	VENDOR DWG NO.	VENDOR SHEET NO.	REV	DATE	VENDOR DRAWING TITLE
12.1-1	AUXILIARY POWER UNIT (APU)	ROCKWELL	VS70-460109	ALL	L	1/90	SCHEMATIC DIAGRAM - AUXILIARY POWER UNIT SUBSYSTEM
			V070-465463	ALL	B	8/89	HEATER INSTALLATION - APU SYSTEM, FUEL, AND LUBE OIL
12.1-2	AUXILIARY POWER UNIT (APU)	ROCKWELL	V070-465510	ALL	A	12/87	TANK AND HEATER ASSEMBLY, APU ACTIVE COOLING SYSTEM, WATER
			VS70-460109	ALL	L	1/90	SCHEMATIC DIAGRAM - AUXILIARY POWERT UNIT SUBSYSTEM
12.2-1	HYD/APU LINE SCHEMATIC	R. I.	V070-585015	1 - 5	A	4/9/84	HYDRAULIC SUB-SYSTEMS INSTALLATION UPPER AFT FUSELAGE, STATION 1307
12.2-2	HYDRAULIC LINE SCHEMATIC	R. I.	V070-586096	1 - 5	-	8/27/80	HYDRAULIC SUBSYSTEM INSTALLATION - RH WING & ELEVON ACTUATORS
			V070-587006	1	B	8/7/81	HYDRAULIC LINES INSTALLATION - MATING VERTICAL STABILIZER/AFT FUSELAGE
			V070-586095	1 - 4	-	10/1/80	HYDRAULIC SUBSYSTEM INSTALLATION - LH WING AND ELEVON ACTUATORS
			V070-586140	1 - 4	B	1/29/81	HYDRAULIC SUBSYSTEM INSTALLATION - LEFT HAND MLG WHEEL WELL
			V070-586145	1 - 4	B	11/19/85	HYDRAULIC SUBSYSTEM INSTALLATION - RIGHT HAND MLG WHEEL WELL
			VS70-580999	1 - 6	E	9/28/89	SCHEMATIC - HYDRAULIC SUBSYSTEM
			VS70-581000	1 - 6	B	9/21/89	SCHEMATIC - HYDRAULIC SUBSYSTEM ORBITER OV-105
12.3-1	HYDRAULIC POWER SYSTEM	ROCKWELL	VS70-580999	1 - 6	E	9/29/89	SCHEMATIC - HYDRAULIC SUBSYSTEM
			VS70-580102	1, 2.3, 4, 5, 10, 11, 13	M	2/12/90	SCHEMATIC DIAGRAM - HYDRAULIC CONTROL SUBSYSTEM
			VS70-580109	1 - 17	H	1/30/90	SCHEMATIC DIAGRAM - HYDRAULIC CONTROL SUBSYSTEM
12.3-2	HYDRAULIC POWER SYSTEM OI21		VS70-581000	1 - 6	B	2/21/89	SCHEMATIC - HYDRAULIC SUBSYSTEM, ORBITER OV-105
			VS70-580102	1 - 13	M	2/12/90	SCHEMATIC DIAGRAM - HYDRAULIC CONTROL SUBSYSTEM
			VS70-580109	1 - 17	H	1/30/90	SCHEMATIC DIAGRAM - HYDRAULIC CONTROL SUBSYSTEM

DWG	SIGNATURE	DATE	DWG	SIGNATURE	DATE
12.1-1,2	ENGR A. BACHIK			ENGR	
	ENGR	11-19-90		ENGR	
12.2-1,2	ENGR K. POHL			ENGR	
	ENGR H. Karl Pohl	11-19-90		ENGR	
12.3-1,2	ENGR K. POHL			APP	19 Nov 90
	ENGR H. Karl Pohl	11-19-90		APP	11/19/90
	ENGR			OMNIPLAN	
	ENGR			LTR E	PCN

NATIONAL AERONAUTICS AND SPACE ADMINISTRATION
LYNDON B. JOHNSON SPACE CENTER HOUSTON, TEXAS

VENDOR DRAWING REFERENCES

SPACE SHUTTLE ALL

TBL NO 12-I

PAGE 12.I-1 SHEET 1 OF 2

BASIC REV E

FOR DETAILED COMPONENT AND LOGIC INFORMATION REFER TO:

SSSH DWG NO.	SSSH DWG TITLE	VENDOR NAME	VENDOR DWG NO.	VENDOR SHEET NO.	REV	DATE	VENDOR DRAWING TITLE
12.3-3	HYDRAULIC POWER SYSTEM	ROCKWELL	VS70-580999	1-6	E	9/29/89	SCHEMATIC - HYDRAULIC SYSTEM, ORBITER
		ROCKWELL	VS70-580102	4 - 12	M	2/12/90	SCHEMATIC DIAGRAM - HYDRAULIC CONTROL SUBSYSTEM
		ROCKWELL	VS70-750589	1-8	D	7/19/83	SCHEMATIC DIAGRAM - OI HYDRAULIC MEASUREMENTS
		JSC	SODB JSC 08934	4.2.4-1 & 2	E AMEND. 217	10/5/88	SHUTTLE OPERATIONAL DATA BOOK, VOLUME I (LOOP VOLUMES)
		ROCKWELL	VS70-958099	43	A		INTEGRATED SYSTEM SCHEMATIC, HYDRAULICS - ORBITER VEHICLES 099, 103, 104, AND SUBS
12.3-4	HYDRAULIC POWER POWER SYSTEM	JSC	SS-P-0002-580H	6-94 - 6-122 HYDRAULIC CIRCULATION PUMP AUTO-MATIC CONTROL	H	2/28/89	NATION SPACE TRANSPORTATION SYSTEM COMPUTER PROGRAM DEVELOPMENT SPECIFICATIONS (CPDS). FUNCTIONAL LEVEL REQUIREMENTS, SYSTEM MANAGEMENT
		ROCKWELL	STS81-0027/V12	6.10 HYDRAULIC CIRC PUMP AUTOMATIC CONTROL SEQUENCE	2Q	9/28/83	ROCKWELL FLIGHT SYSTEM SOFTWARE REQUIREMENTS DOCUMENT
		IBM	NAS-9-16920	SECTION 3.2.1.19 HYDRAULIC CIRCULATION PUMP AUTO-MATIC CONTROL SEQUENCE SST__HYD__ FLD__TEMP	OI20	6/18/90	SPACE SHUTTLE ORBITER AVIONICS SOFTWARE - SOFTWARE DESIGN SPECIFICATION. PART II OPS DETAIL DESIGN SPECIFICATIONS, VOLUME III - APPLICATION. PART 2 - SYSTEMS MANAGEMENT
		ROCKWELL	VS70-580102	8.9,10,12,13	M	2/12/90	SCHEMATIC DIAGRAM - HYDRAULIC CONTROL SUBSYSTEM
			VS70 580109	12,13	H	8-4-86	SCHEMATIC DIAGRAM - HYDRAULIC CONTROL SUBSYSTEM
			EEL	238,239,240	OPERA-TIONAL	4-21-87	ELECTRICAL EQUIPMENT LIST (BRAKE HEATER WATTAGE)
12.4	APU/HYD WATER SPRAY BOILER	HAMILTON STANDARD	SVSK 91674	1-3	P	10/19/87	ELECTRICAL SCHEMATIC, ITEM 642, WSB CONTROLLER
		JSC	SS-P-0002-580G	6-79 - 6-83 HYDRAULIC WATER BOILER QUANTITY	G	11/17/86	SPACE SHUTTLE PROGRAM ORBITER PROJECT COMPUTER DEVELOPMENT SPECIFICATION, VOLUME 1, BOOK 4 NAS-9-14000
		IBM	MGO38119	42 - 49 HYDRAULIC WATER BOILER QUANTITY	E	5/30/90	BACKUP FLIGHT SYSTEM (BFS) SYSTEM MANAGEMENT/SPECIAL PROCESSES AND PAYLOAD PROGRAM REQUIREMENTS DOCUMENT
		ROCKWELL	VS70-580112	1-4	G	4/11/83	SCHEMATIC DIAGRAM - WATER SPRAY BOILER NO. 1, 2, 3
		HAMILTON STANDARD		ALL		9/16/76	SHUTTLE WATER SPRAY BOILER PRELIMINARY DESIGN REVIEW DOCUMENT
		ROCKWELL	VS70-580999	2	E	9/29/89	SCHEMATIC - HYDRAULIC SUBSYSTEM, ORBITER, OV103 ONLY

DWG	SIGNATURE	DATE	DWG	SIGNATURE	DATE
12..3-3	ENGR D. SIMON			ENGR	
	ENGR D. Simon	11-19-90		ENGR	
12.3-4	ENGR K. POHL			ENGR	
	ENGR K. Pohl	11-19-90		ENGR	
12.4	ENGR K. POHL			APP	19 Nov 90
	ENGR K. Pohl	11-19-90		APP R. McCool	11/19/90
	ENGR			OMNIPLAN	
	ENGR			LTR E	PCN

NATIONAL AERONAUTICS AND SPACE ADMINISTRATION
LYNDON B. JOHNSON SPACE CENTER HOUSTON, TEXAS

VENDOR DRAWING REFERENCES

SPACE SHUTTLE
ALL

TBL NO 12-I

*U.S.GOVERNMENT PRINTING OFFICE:1990-561-057/20065

BASIC REV E

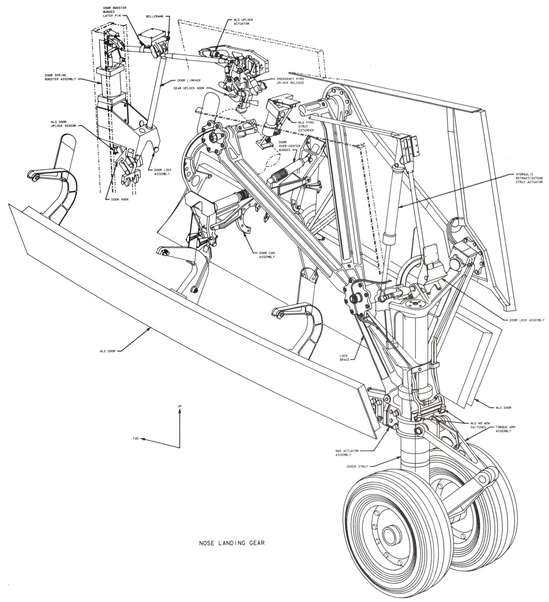

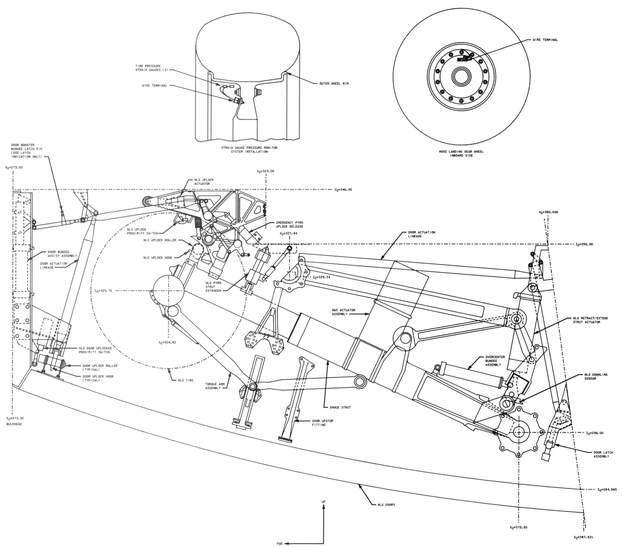

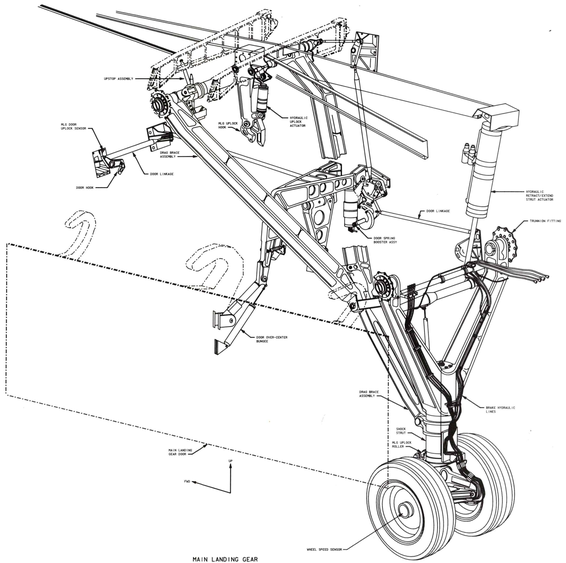

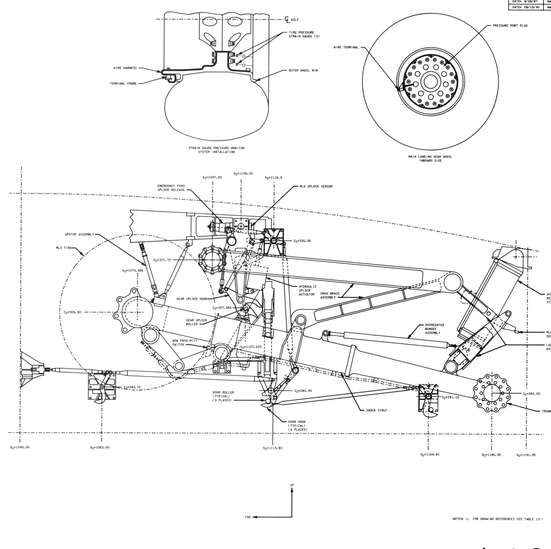

1 LG 1

LANDING GEAR

13.1

BASIC REV E

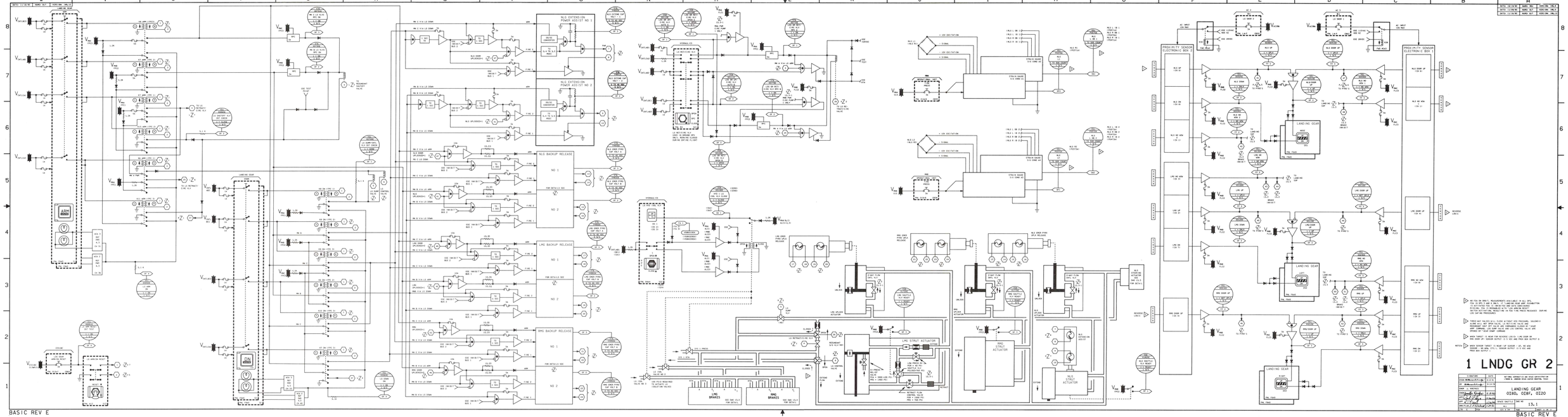

NLG EXTENSION POWER ASSIST NO 1
NLG EXTENSION POWER ASSIST NO 2
NLG BACKUP RELEASE
LMG BACKUP RELEASE
RMG BACKUP RELEASE
LMG STRUT ACTUATOR
RMG STRUT ACTUATOR
NLG STRUT ACTUATOR
LMG BRAKES
RMG BRAKES
PROXIMITY SENSOR ELECTRONIC BOX 2
PROXIMITY SENSOR ELECTRONIC BOX 1
LANDING GEAR
1 LNDG GR 2
LANDING GEAR
OI80, OI8F, OI20
13.1
BASIC REV E
BASIC REV E

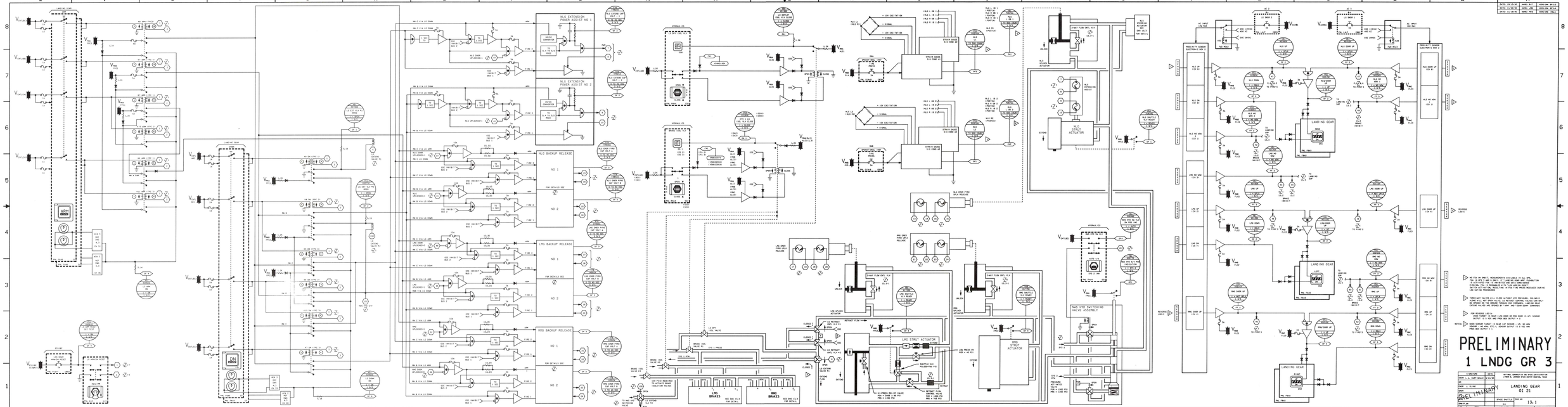
PRELIMINARY
1 LNDG GR 3
LANDING GEAR
01 21
13.1
BASIC REV E

PILOT'S INSTALLATION
TOE PORTION (BRAKES)
BRAKE PEDAL
POSITION TRANSDUCER (2) PLACES)
TO CONTROLLER FOR ANTI-SKID AND COMMAND TRANSDUCER
BRAKE SYSTEM ANTI-SKID FAIL BOARD
HEEL
RUDDER PEDAL TRANSDUCER ASSY (OPTN)
BRAKE/SKID CONTROL BOX B
LEFT OUTBOARD CIRCUIT
LEFT INBOARD CIRCUIT
RIGHT INBOARD CIRCUIT
RIGHT OUTBOARD CIRCUIT
I SEEC CONTROL BOX A FOR LOGIC AND TELEMETRY
BRAKE/SKID CONTROL BOX A
LEFT OUTBOARD CIRCUIT
LEFT INBOARD CIRCUIT
RIGHT INBOARD CIRCUIT
RIGHT OUTBOARD CIRCUIT
WHEEL SPEED SENSOR FAULT DETECTION CIRCUIT
DETECTS OPEN OR SHORT CIRCUIT in WHEEL SENSOR
BUILT-IN-TEST (BIT) CIRCUIT
PERFORMS SELF-DIFFICULTY TEST AT ANTI-SKID ACTIVATION. PERFORMS "FAULT TO-ONE" IF TEST IS FAILED
AT INPUT POWER THE REGULATED POWER IS LOST
SKID VALVE FAULT DETECTION CIRCUIT
DETECTS OPEN OR SHORT CIRCUIT IN SKID VALVE SOLENOID. NORMAL OR DRIVER FOLLOWS
PROVIDES EQUITABLE COMMAND FOR WHEEL SPEED TRANSDUCER TO ZERO SPEED TRANSDUCER TO ZERO SPEED
TOUCHDOWN PROTECTION
PREVENTS BRAKE APPLICATION UNTIL ANTI-SKID SYSTEM IS ACTIVATED
LOCKWHEEL COMPARATOR
AT VELOCITY THE PERCENT BELOW AVERAGE VELOCITY, LIMIT APPLIED BRAKE PRESSURE
OUTPUT CURRENT TO PROPORTIONAL TO COMMANDER'S BRAKE PEDAL DEFLECTION
OUTPUT CURRENT TO PROPORTIONAL TO PILOT'S BRAKE PEDAL DEFLECTION
LARGEST CURRENT OUTPUT APPLIED BRAKE PRESSURE
REFERENCE DECELERATION CONTROL
DETERMINES VEHICLE AVERAGE DECELERATION AND SPEED THE VELOCITY REFERENCE TO A HIGHER DECELERATION LEVEL
COMPARATOR
COMPARES WHEEL SPEED TO SIMULATED VEHICLE VELOCITY
VELOCITY REFERENCE INTEGRATOR
PROVIDES POSITIVE VELOCITY REFERENCE VOLTAGE PROPORTIONAL TO WHEEL VELOCITY
SPIN-UP CONTROL
AT WHEEL SPIN-UP DETECTION, THE SPIN-UP CONTROL REDUCES BRAKE PRESSURE TO TRACK WHEEL SPEED
PRESSURE BIAS MODULATION
HYDRAULICALLY VELOCITY ERROR AND DERIVATIVE SIGNALS AND CONVERTS BRAKE PRESSURE
TRANSIENT CONTROL
PROVIDES RAPID RECOVERY FROM SKIDS
COMPENSATION NETWORK
PROVIDES PHASE COMPENSATION FOR HYDRAULIC AND BRAKE PHASE LAG
VALVE DRIVER
CONVERTS INPUT VOLTAGE TO PROPORTIONAL CURRENT TO SKID CONTROL VALVE
SKID CONTROL VALVE
SKID POWER SUPPLY
BRAKE POWER SUPPLY
FROM BRAKE/SKID CONTROL BOX B (LEFT OUTBOARD CIRCUIT)
FROM ANTI-SKID BUTTON POSITION
FLCA-1
SEE DWG 5.0-1
JACK 1 (JACK 1)
SEE DWG 5.0-1
HUDE #2
SEE DWG 5.0-1
HUDE #1 (-1226)
SEE DWG 5.0-1
ANTI-SKID FAIL MATRIX
CAUSE
BRAKE PRESS ON BUT WHEELS DO NOT SPIN UP ON PANEL OFF
SKID CONTROL CHANNEL FAILS (-1226) OR ANY PANEL LIGHT
SKID CONTROL VALVE OPEN OR SHORT (-1226)
WHEEL SPEED SENSOR OPEN OR SHORT (-1226)
DESCRIPTION
SYSTEM TEST FAILS LIMIT
BUTTON TEST INDICATIONS
CHANNEL TEST NO. 1
LOW-VELOCITY-R
LOW-VELOCITY-L
HIGH-VELOCITY-R
HIGH-VELOCITY-L
CHANNEL TEST NO. 2
LOW-VELOCITY-R
LOW-VELOCITY-L
HIGH-VELOCITY-R
HIGH-VELOCITY-L
FAIL LIGHT ONLY
BRAKE CONTROL MATRIX
BOX A = BRAKE/ANTI-SKID POWER
BOX B = BRAKE/ANTI-SKID POWER
SERVO VALVE CONTROL
WHEEL SPEED SENSOR INPUT
HYDRAULIC SYSTEM - ACTIVATE
HYDRAULIC SYSTEM - BACKUP
2 BRAKES
SCALE: 1 INCH = 1 INCH
DRAWN
ITEM 1 (MIL S. SUM)
APPROVED
DATE
DRAWING STATUS
BRAKES
13.2
SHEET 1 OF 2
BASIC REV E

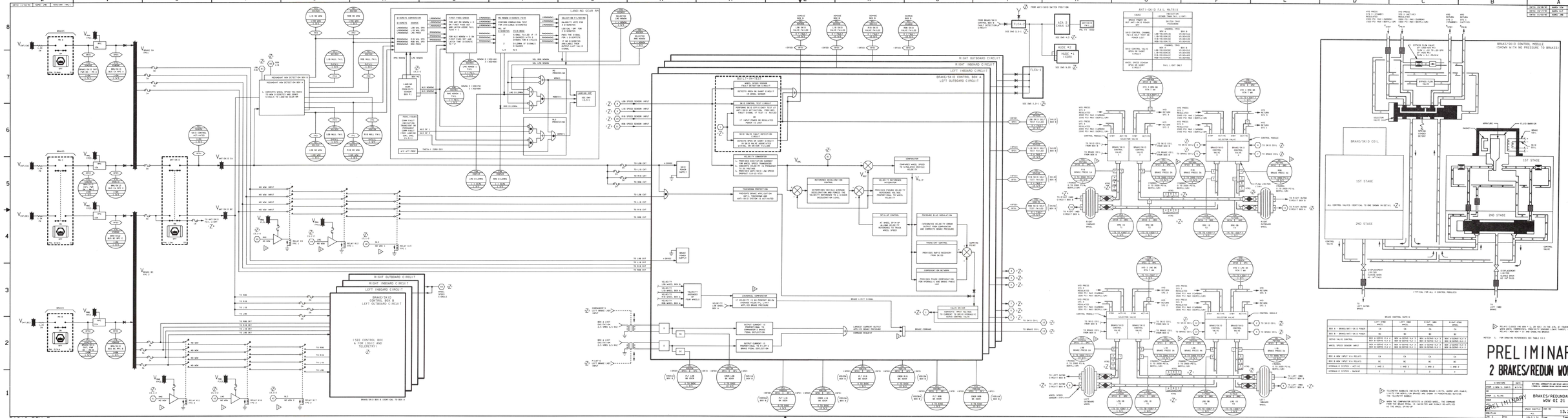
BRAKE/SKID CONTROL BOX B
LEFT OUTBOARD CIRCUIT
RIGHT OUTBOARD CIRCUIT
RIGHT INBOARD CIRCUIT
LEFT INBOARD CIRCUIT
BRAKE/SKID CONTROL BOX A
BUILT-IN-TEST
ANTI-SKID FAIL MATRIX
BRAKE/SKID CONTROL MODULE
(SHOWN WITH NO PRESSURE TO BRAKES)
BRAKE/SKID COIL
1ST STAGE
2ND STAGE
PRELIMINARY
2 BRAKES/REDUM WOW 2
BRAKES/REDUNDANT WOW 02 21
13.2

BASIC REV E

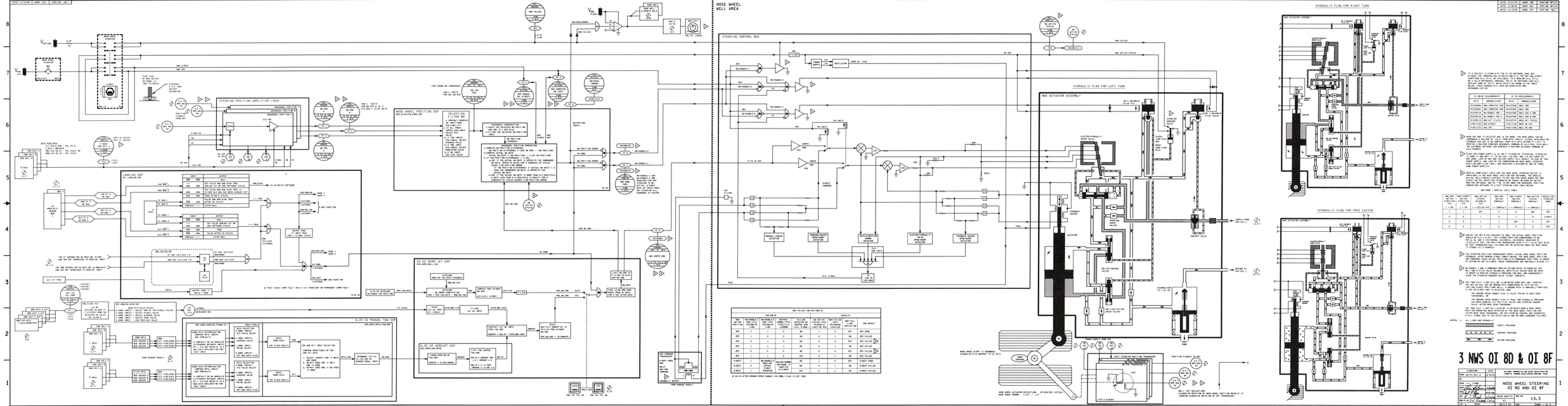
NOSE WHEEL WELL AREA
STEERING CONTROL BOX
HYDRAULIC FLOW FOR LEFT TURN
HYDRAULIC FLOW FOR RIGHT TURN
HYDRAULIC FLOW FOR FREE CASTOR
NWS ACTUATOR ASSEMBLY
STEERING POSITION AMPLIFIER (SPA)
NOSE WHEEL POSITION SOP
LANDING SOP
25 HZ AERO JET DAP
6.25 HZ MANUAL TAXI SOP
6.25 HZ AEROJET DAP
NWS FAILED INDICATIONS &
3 NWS OI 8D & OI 8F
NOSE WHEEL STEERING OI 8D AND OI 8F
BASIC REV E

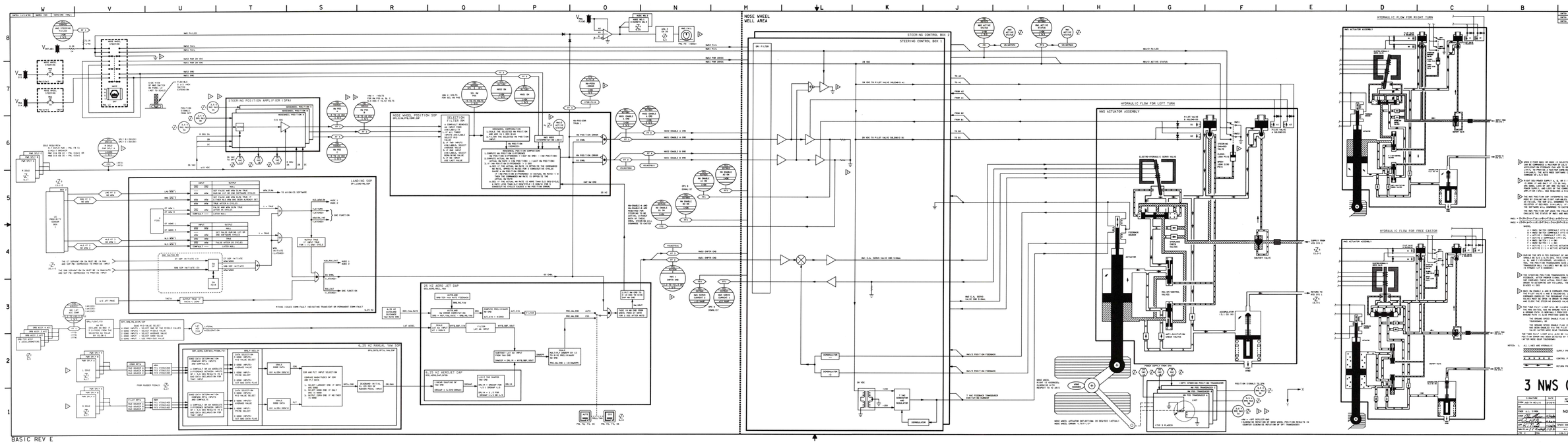
NOSE WHEEL WELL AREA
STEERING CONTROL BOX 2
STEERING CONTROL BOX 1
STEERING POSITION AMPLIFIER (SPA)
NOSE WHEEL POSITION SOP
LANDING SOP
25 HZ AERO JET DAP
6.25 HZ MANUAL TAK SOP
6.25 HZ AEROJET DAP
HYDRAULIC FLOW FOR LEFT TURN
NWS ACTUATOR ASSEMBLY
HYDRAULIC FLOW FOR RIGHT TURN
HYDRAULIC FLOW FOR FREE CASTOR
3 NWS OI 20 2
NOSE WHEEL STEERING OI 20
13.3
BASIC REV E

FOR DETAILED COMPONENT AND LOGIC INFORMATION REFER TO:

SSSH DWG NO.	SSSH DWG TITLE	VENDOR NAME	VENDOR DWG NO.	VENDOR SHEET NO.	REV	DATE	VENDOR DRAWING TITLE
13.1-1	LANDING GEAR	ROCKWELL	V070-756015	1	C	12/25/87	MAIN LANDING GEAR WHEEL - INSTRUMENTED, TIRE PRESSURE, ASSEMBLY
			V070-752015	1	A	6/30/87	NLG WHEEL - INSTRUMENTED, TIRE PRESSURE, ASSY OF
13.1-2	LANDING GEAR	ROCKWELL	VS70-510109	ALL	H	3/17/89	SCHEMATIC DIAGRAM - LANDING GEAR CONTROLS SUBSYSTEM
			VS70-510102	ALL	N	2/7/90	SCHEMATIC DIAGRAM - LANDING GEAR CONTROLS SUBSYSTEM
			VS70-750202	ALL	J	4/1/87	SCHEMATIC DIAGRAM - OI POWER & CONTROL
			VS70-750209	ALL	G	4/1/87	SCHEMATIC DIAGRAM - OI POWER & CONTROL
			SPECIFICATION MC476-0134	ALL	A	1/17/75	SPECIFICATION SIGNAL CONDITIONER, STRAIN GAGE
13.1-3	LANDING GEAR OI 21	ROCKWELL	VS70-510109	ALL	H	3/17/89	SCHEMATIC DIAGRAM - LANDING GEAR CONTROLS SUBSYSTEM
			VS70-510102	ALL	N	2/7/90	SCHEMATIC DIAGRAM - LANDING GEAR CONTROLS SUBSYSTEM
			VS70-581000	ALL	B	9/21/89	SCHEMATIC DIAGRAM-HYDRAULIC SUBSYSTEM
			VS70-958099	2-11	B	3/19/90	INTEGRATED SYSTEM SCHEMATIC HYDRAULICS
			SPECIFICATION MC476-0134	ALL	A	1/17/75	SPECIFICATION SIGNAL CONDITIONER, STRAIN GAGE

DWG	SIGNATURE	DATE	DWG	SIGNATURE	DATE
13.1-1, 2	ENGR J. KREYKES			ENGR	
	ENGR Jennifer Kreykes	11-6-90		ENGR	
13.1-3	ENGR J. KLING			ENGR	
	ENGR Jeffrey V. Kling	11/6/90		ENGR	
	ENGR			APP	16 Nov 90
	ENGR			APP	11/16/90
	ENGR			OMNIPLAN	
	ENGR			LTR E	PCN

NATIONAL AERONAUTICS AND SPACE ADMINISTRATION
LYNDON B. JOHNSON SPACE CENTER HOUSTON, TEXAS

VENDOR DRAWING REFERENCES

SPACE SHUTTLE | ALL

TBL NO 13-I

PAGE 3.1-1 | SHEET 1 OF 3

BASIC REV E

FOR DETAILED COMPONENT AND LOGIC INFORMATION REFER TO:

SSSH DWG NO.	SSSH DWG TITLE	VENDOR NAME	VENDOR DWG NO.	VENDOR SHEET NO.	REV	DATE	VENDOR DRAWING TITLE
13.2-1	BRAKES	ROCKWELL	VS70-520109	1, 2, 3	K	5/29/90	SCHEMATIC DIAGRAM - BRAKE & SKID CONTROL SUBSYSTEM
			VS70-958099	56-63	B	3/19/90	INTEGRATED SYSTEM SCHEMATIC - HYDRAULICS
			VS70-581000	ALL	B	9/21/89	SCHEMATIC-HYDRAULIC SUBSYSTEM, ORBITER
			VS70-730269	1	E	8/9/84	SCHEMATIC DIAGRAM - HEAD UP DISPLAY SUBSYSTEM
13.2-2	BRAKES/REDUNDANT WOW OI 21	ROCKWELL	VS70-520109	1, 2, 3	K	5/29/90	SCHEMATIC DIAGRAM - BRAKE SKID CONTROL SUBSYSTEM
			VS70-958099	2-11	B	3/19/90	INTEGRATED SYSTEMS SCHEMATIC - HYDRAULICS
			VS70-581000	ALL	B	9/21/89	SCHEMATIC - HYDRAULIC SUBSYSTEM - ORBITERS OV-103, OV-104, OV-105

DWG	SIGNATURE	DATE	DWG	SIGNATURE	DATE
13.2-1	ENGR J. KREYKES			ENGR	
	ENGR Jennifer Knights	11·16·90		ENGR	
13.2-2	ENGR J. KLING			ENGR	
	ENGR Jeffrey V. Kling	11/16/90		ENGR	
	ENGR			APP	16 Nov 90
	ENGR			APP	11/16/90
	ENGR			OMNIPLAN	
	ENGR			LTR E PCN	

NATIONAL AERONAUTICS AND SPACE ADMINISTRATION
LYNDON B. JOHNSON SPACE CENTER HOUSTON, TEXAS

VENDOR DRAWING REFERENCES

SPACE SHUTTLE	TBL NO 13-I
ALL	
	PAGE 13.I-2 SHEET 2 OF 3

BASIC REV E

FOR DETAILED COMPONENT AND LOGIC INFORMATION REFER TO:

SSSH DWG NO.	SSSH DWG TITLE	VENDOR NAME	VENDOR DWG NO.	VENDOR SHEET NO.	REV	DATE	VENDOR DRAWING TITLE
13.3-1	NOSE WHEEL STEERING OI 8D AND OI 8F	ROCKWELL	VS70-510302	1 & 2	E	3/17/90	SCHEMATIC DIAGRAM - NOSE WHEEL STEERING SUBSYSTEM
		ROCKWELL	VS70-510219	1 & 2	B	4/11/89	SCHEMATIC DIAGRAM - NOSEWHEEL STEERING SUBSYSTEM
		ROCKWELL	STS83-0015B	PAGES: 4-115 - 4-120 4-169 - 4-172 4-179 - 4-206	PCN 2B	11/29/89	SPACE SHUTTLE ORBITER OPERATIONAL - LEVEL C - FUNCTIONAL SUBSYSTEM SOFTWARE REQUIREMENTS GUIDANCE, NAVIGATION AND CONTROL - PART E - SUBSYSTEM OPERATING PROGRAMS - FLIGHT CONTROL SENSOR/CONTROLLER
		IBM (NASA)	NAS9-14444	3.12.1.4 3.13.1.4 3.13.1.5 3.12.1.5 3.12.2.1	0I8A	6/5/87	SPACE SHUTTLE PROGRAMS ORBITER AVIONICS SOFTWARE OPERATIONAL (OPS) DETAILED DESIGN SPECIFICATION (DDS) - VOLUME: III-APPLICATIONS PART: 1 - GUIDANCE, NAVIGATION & CONTROL (GN&C)
		ROCKWELL	VS70-958099	52	A	-	NOSE WHEEL STEERING, NLG UPLOCK & STRUT ACTR FLUIDS/CONTROL
		-	MECH CONSOLE HANDBOOK VOL II JSC-18341	2.6-1 - 2.6-14	B	8/5/88	NWS SYSTEM
				2.7-1 - 2.7-7		8/5/88	NWS CONTROL BOX
13.3-2	NOSE WHEEL STEERING OI 20	ROCKWELL	VS70-510203	1&2	A	2/12/90	SCHEMATIC DIAGRAM - NOSE WHEEL STEERING SUBSYSTEM
		ROCKWELL	CR89889	PAGES: 1A - 87	H	5/31/89	IMPROVED NOSE WHEEL STEERING CHANGE REQUEST
		ROCKWELL	CR89890	PAGES: 1A - 77	E	5/30/89	IMPROVED NOSE WHEEL STEERING VU CHECKOUT SOFTWARE CHANGE REQUEST
		STERER	CDR-70628	PAGES 6 - 8	-	-	INWS CRITICAL DESIGN REVIEW SCHEMATICS
		STERER	-	2	-	8/14/90	NWS FUNCTIONAL DIAGRAM (FAX) (EDMOND ISSAKHANIAN)

DWG	SIGNATURE	DATE	DWG	SIGNATURE	DATE
13.3-1, 2	ENGR A. SIMON			ENGR	
	ENGR	11/16/90		ENGR	
	ENGR			ENGR	
	ENGR			ENGR	
	ENGR			APP	16 Nov 90
	ENGR			APP	11/16/90
	ENGR			OMNIPLAN	
	ENGR			LTR E PCN	

NATIONAL AERONAUTICS AND SPACE ADMINISTRATION
LYNDON B. JOHNSON SPACE CENTER HOUSTON, TEXAS

VENDOR DRAWING REFERENCES

SPACE SHUTTLE ALL

TBL NO 13-I

*U.S.GOVERNMENT PRINTING OFFICE:1990-561-057/20066

BASIC REV E

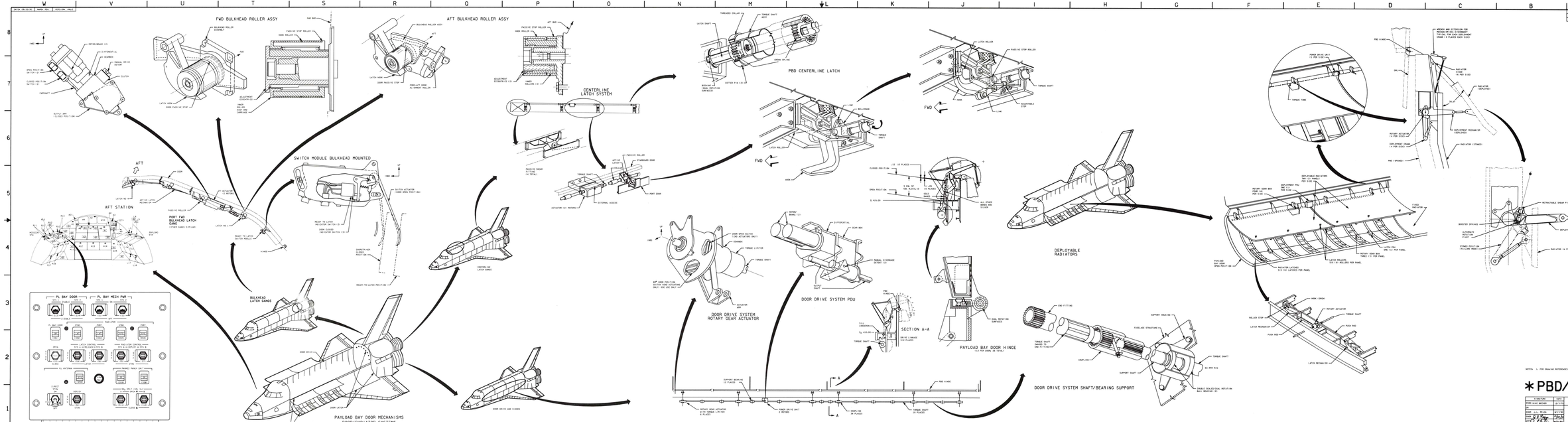
FWD BULKHEAD ROLLER ASSY
AFT BULKHEAD ROLLER ASSY
CENTERLINE LATCH SYSTEM
PBD CENTERLINE LATCH
SWITCH MODULE BULKHEAD MOUNTED
AFT STATION
PORT FWD BULKHEAD LATCH GANG
BULKHEAD LATCH GANGS
PAYLOAD BAY DOOR MECHANISMS DOOR/RADIATOR SYSTEMS
DOOR DRIVE SYSTEM ROTARY GEAR ACTUATOR
DOOR DRIVE SYSTEM PDU
SECTION A-A
PAYLOAD BAY DOOR HINGE
DEPLOYABLE RADIATORS
DOOR DRIVE SYSTEM SHAFT/BEARING SUPPORT
PL BAY DOOR
PL BAY MECH PWR
FWD
AFT
BASIC REV E
*PBD/RAD OV
PAYLOAD BAY DOORS/ RADIATOR OVERVIEW
14.1

DATE: 04/24/87	NAME: JMB	VERSION: BPL 6
DATE: 08/03/87	NAME: MPH	VERSION: INL 1
DATE: 08/20/90	NAME: MDJ	VERSION: INL 2

PORT DOOR

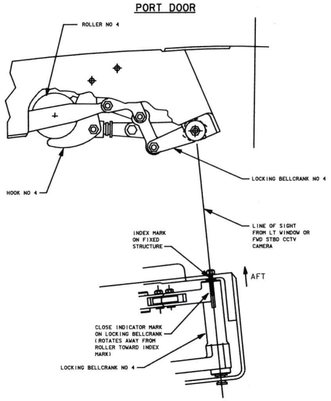

PORT FWD BULKHEAD CLOSE INDICATOR MARKINGS ON NO 4 LATCH ▷

STARBOARD DOOR

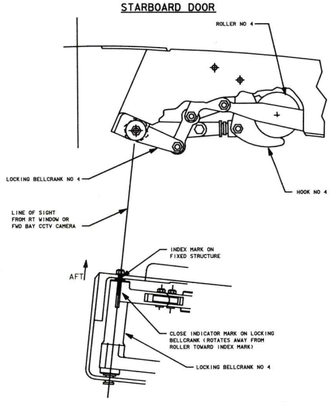

STBD FWD BULKHEAD CLOSE INDICATOR MARKINGS ON NO 4 LATCH ▷

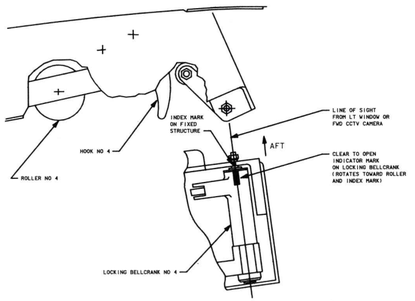

PORT FORWARD BULKHEAD CLEAR TO OPEN INDICATOR MARKINGS ON NO 4 LATCH ▷

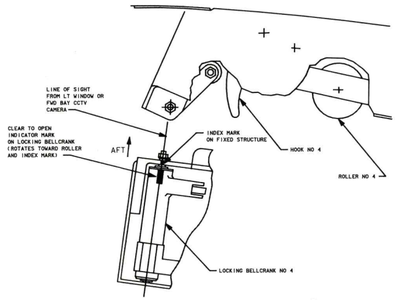

STBD FWD BULKHEAD CLEAR TO OPEN INDICATOR MARKINGS ON NO 4 LATCH ▷

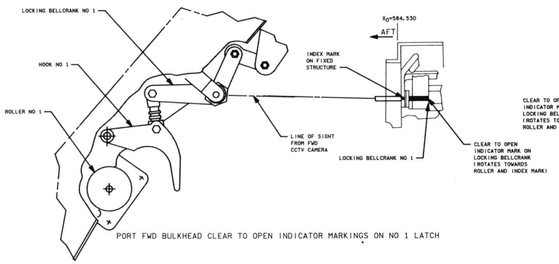

PORT FWD BULKHEAD CLEAR TO OPEN INDICATOR MARKINGS ON NO 1 LATCH

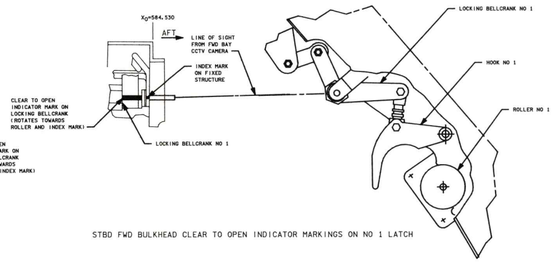

STBD FWD BULKHEAD CLEAR TO OPEN INDICATOR MARKINGS ON NO 1 LATCH

STARBOARD DOOR

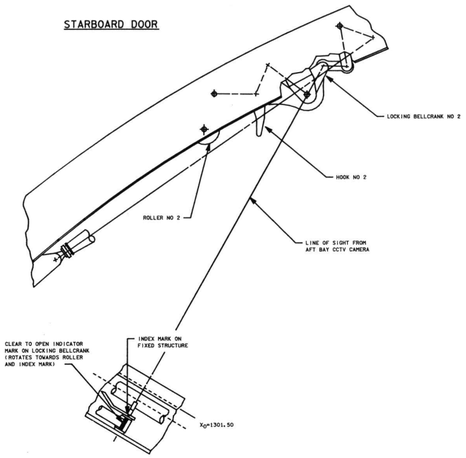

STBD AFT BULKHEAD LATCH
CLEAR TO OPEN INDICATOR MARKINGS ON NO 2 LATCH

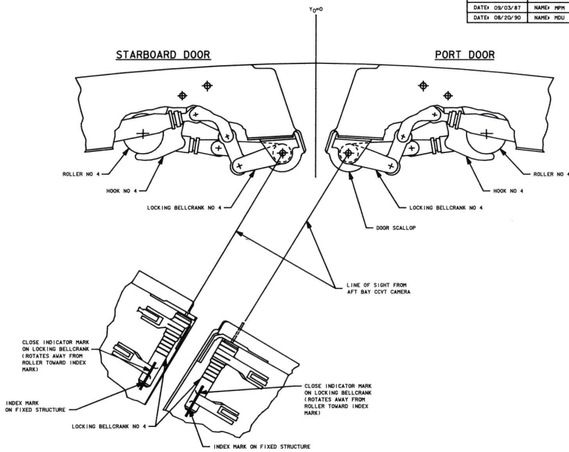

STBD AND PORT AFT BULKHEAD
LATCH CLOSE INDICATOR MARKINGS ON NO 4 LATCH

PORT DOOR

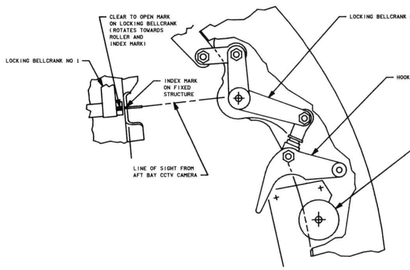

PORT AFT BULKHEAD LATCH
CLEAR TO OPEN INDICATOR MARKINGS ON NO 1 LATCH

TYPICAL PBD ℄ LATCH

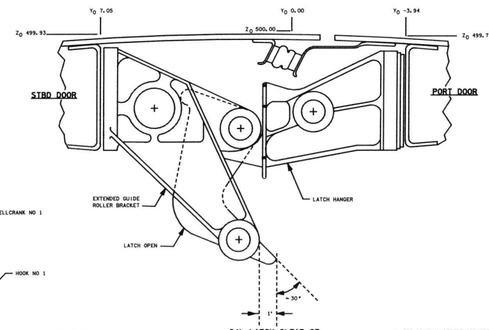

C/L LATCH CLEAR OF ROLLER CRITERIA

- TIP OF LATCH POINTING APPROX. 30° AWAY FROM Y AXIS
- TIP OF LATCH APPROX. 1 INCH FROM EXTENDED GUIDE ROLLER

4. FOR DRAWING REFERENCES SEE TABLE 14-I
3. ALL OPEN MARKINGS ARE WIDER THAN CLOSE MARKINGS
2. ALL MARKINGS ARE WHITE DECALS

NOTE: ▷ THESE MARKINGS SHOULD BE USED WITH CAUTION. NO 1 BELLCRANK MARKINGS ARE BEST INDICATORS DUE TO KINEMATICS ON LATCHING SYSTEM

*1 PL LCH 2

SIGNATURE		DATE
DSGN L. M. BUCHANAN		2/24/81
DR L. M. BUCHANAN		2/24/81
ENGR J.L. PEJZA		8/17/90
ENGR D.F. Kipp		9/5/90
APP J.A.T.U.		9/20/90
APP Arthur G. Aldrich		9/26/90
OMNIPLAN S.K. Kirkham		11-8-90

NATIONAL AERONAUTICS AND SPACE ADMINISTRATION
LYNDON B. JOHNSON SPACE CENTER HOUSTON, TEXAS

PL BAY DOOR LATCH
CLEAR TO OPEN/CLOSE
INDICATIONS

LTR E	PCN	SPACE SHUTTLE	DWG NO 14.1
		ALL	
		66 X 34	PAGE SHEET 2 OF 3

BASIC REV E

BASIC REV E

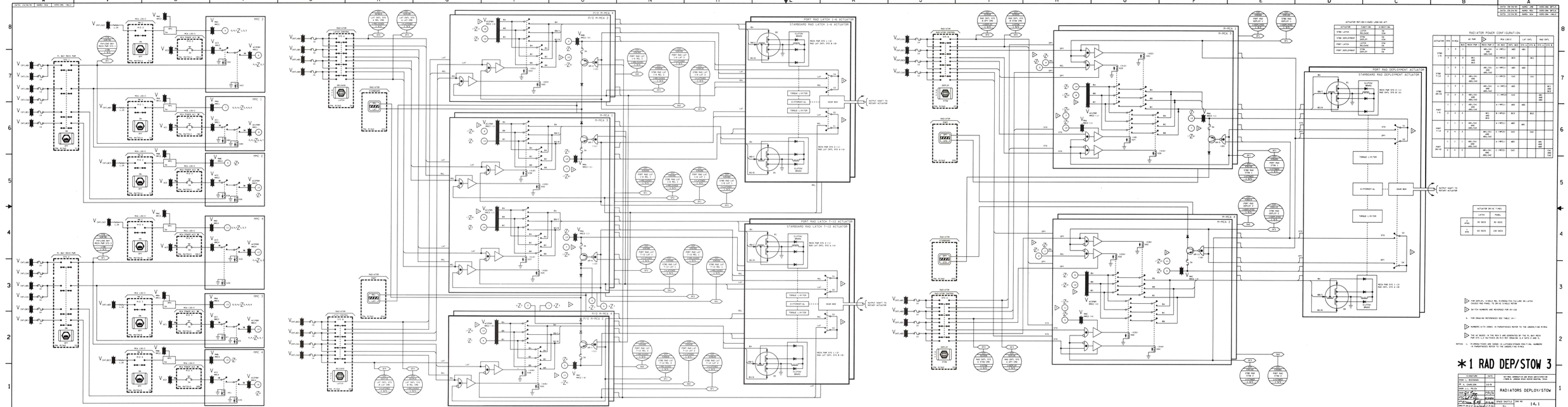
W V U T S R Q P O N M L K J I H G F E D C B A
8 7 6 5 4 3 2 1
PAYLOAD BAY MECH PWR SYS 2 (3)
PAYLOAD BAY MECH PWR SYS 1
FL BAY MECH PWR
MCA LOG-C
PAYLOAD BAY MECH PWR SYS 3
PAYLOAD BAY MECH PWR SYS 4
PAYLOAD BAY MECH PWR SYS 5
PAYLOAD BAY MECH PWR SYS 6
PRPC 1
PRPC 2
PRPC 3
PRPC 4
RADIATOR
R/O M-MCA 4
R/O M-MCA 2
R/O M-MCA 3
R/O M-MCA 1
PORT RAD LATCH 1-6 ACTUATOR
STARBOARD RAD LATCH 1-6 ACTUATOR
PORT RAD LATCH 7-12 ACTUATOR
STARBOARD RAD LATCH 7-12 ACTUATOR
OUTPUT SHAFT TO ROTARY ACTUATOR
TORQUE LIMITER
DIFFERENTIAL
GEAR BOX
M-MCA 4
M-MCA 3
M-MCA 2
M-MCA 1
PORT RAD DEPLOYMENT ACTUATOR
STARBOARD RAD DEPLOYMENT ACTUATOR
CLUTCH
MOTOR
BRAKE
ACTUATOR MOTOR/BRAKE/CLUTCH/GEARHEAD ATT
ACTUATOR FUNCTION DIRECTION
STBD LATCH RELEASE CCW
STBD DEPLOYMENT DEPLOY CW
PORT LATCH RELEASE CW
PORT DEPLOYMENT DEPLOY CW
RADIATOR POWER CONFIGURATION
ACTUATOR MTR M-MCA LAT (INT) MAIN (EXT)
AC PWR MCA LOG-C
MECH PWR SYS 1 MECH PWR SYS 2 MECH PWR SYS 3 MECH PWR SYS 4 SYS A SYS B
STBD 1-6 MTR 1 MTR 2 MTR 3 MTR 4 MTR 5 MTR 6 MTR 7 MTR 8 MTR 9 MTR 10 MTR 11 MTR 12
STBD 7-12 MTR 1 MTR 2 MTR 3 MTR 4 MTR 5 MTR 6 MTR 7 MTR 8 MTR 9 MTR 10 MTR 11 MTR 12
STBD DPLYS MTR 1 MTR 2 MTR 3 MTR 4 MTR 5 MTR 6 MTR 7 MTR 8 MTR 9 MTR 10 MTR 11 MTR 12
PORT 1-6 MTR 1 MTR 2 MTR 3 MTR 4 MTR 5 MTR 6 MTR 7 MTR 8 MTR 9 MTR 10 MTR 11 MTR 12
PORT 7-12 MTR 1 MTR 2 MTR 3 MTR 4 MTR 5 MTR 6 MTR 7 MTR 8 MTR 9 MTR 10 MTR 11 MTR 12
PORT DPLYS MTR 1 MTR 2 MTR 3 MTR 4 MTR 5 MTR 6 MTR 7 MTR 8 MTR 9 MTR 10 MTR 11 MTR 12
ACTUATOR DRIVE TIMES
LATCH PANEL
1 DRIVE 90 SECS 60 SECS
1/4 DRIVE 40 SECS 100 SECS
FOR DEPLOY, SINGLE MEL MICROSWITCH FAILURE ON LATCH CAUSES RAD PANEL TO DRIVE SINGLE MOTOR
SWITCH NUMBERS ARE REVERSED FOR 3H-102
A. FOR DRAWING REFERENCES SEE TABLE 14-1
NUMBERS WITH ZONES IN PARENTHESES REFER TO THE UNDERLYING M-MCA
THE AC BUSES IN THE MCA'S ARE GENERATED BY THE FL BAY MECH PWR SYS 1,2 &4 PANELS AS PER DRAWING 3.4 SYS 2 AND 3.
NOTES: L. M-CROSSLINKS ARE SHOWN IN LATCHED/STOWED POSITION. NUMBERS IN PARENTHESES REFER TO THE UNDERLYING M-MCA
*1 RAD DEP/STOW 3
S ENGINEER DATE
DSNR: L. RICHARDS 10/8
DR: L. CHAMLIAN 10/8
CHKD:
CHKD:
CHKD:
CHKD:
NOTIFY:
RADIATORS DEPLOY/STOW
SPACE SHUTTLE DWG NO 14-1
REV
SHEET 14 OF 15
BASIC REV E
BASIC REV E

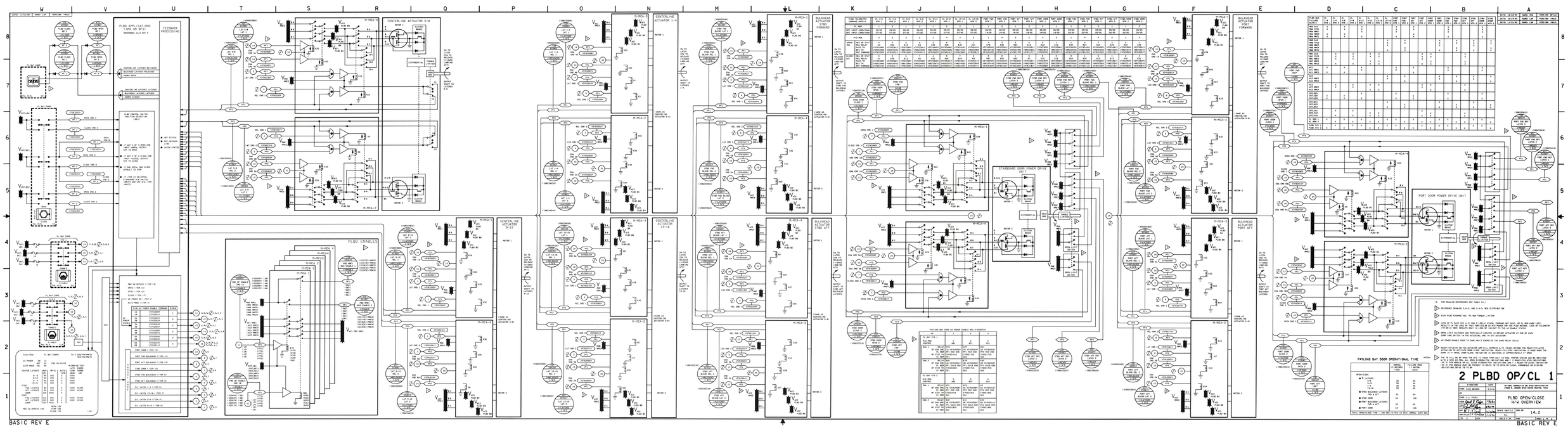
PLBD APPLICATIONS (SPC OR BFS)
FEEDBACK PROCESSING
CENTERLINE ACTUATOR 5-8
CENTERLINE ACTUATOR 1-4
BULKHEAD ACTUATOR STBD FORWARD
BULKHEAD ACTUATOR PORT FORWARD
STARBOARD DOOR POWER DRIVE UNIT
PORT DOOR POWER DRIVE UNIT
PLBD ENABLES
CENTERLINE ACTUATOR 9-12
CENTERLINE ACTUATOR 13-16
BULKHEAD ACTUATOR STBD AFT
BULKHEAD ACTUATOR PORT AFT
PAYLOAD BAY DOOR OPERATIONAL TIME
2 PLBD OP/CL 1
PLBD OPEN/CLOSE
H/W OVERVIEW
14.2
BASIC REV E

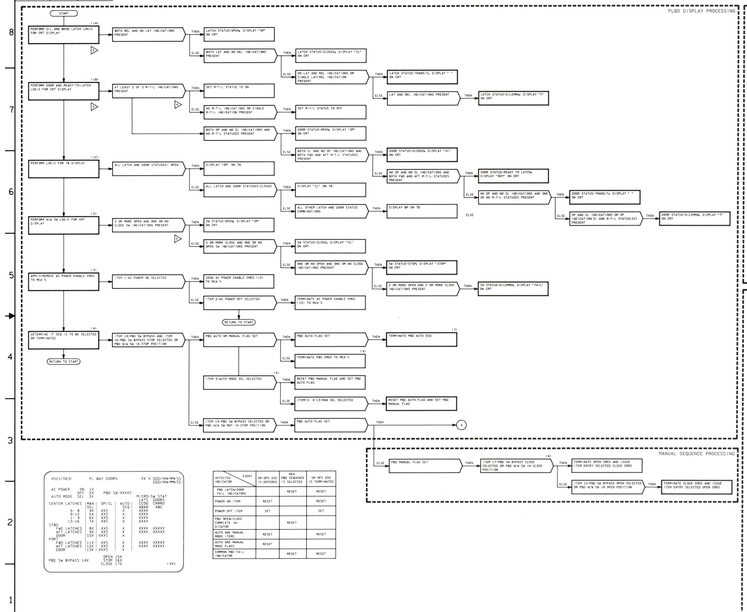
PLBD DISPLAY PROCESSING
START
PERFORM D/L AND BRING LATCH LABELS FOR DIR DISPLAY
PERFORM DOOR AND ACKNOWLEDGE-TO-LATCH LABELS FOR DIR DISPLAY
PERFORM LABELS FOR TBS DISPLAY
PERFORM N/A OR EXIST FOR DIR DISPLAY
DISPLAY/ENABLE ALT POWER ENABLE ONES TO MCA'S
PERFORM AT SIDE TO TO BE SELECTED OR TERMINATE
TCM LATCHED TBA BYPASSED AND TCM LATCHED TBA ON BYPASS SELECTED OR TBA N/A BA TO STOP PROCESSING
TCM AUTO MODE SEL SELECTED
TCM N/S-H-V-I-TRANS SEL SELECTED
TCM LH PBD TBA BYPASSED SELECTED OR TBA N/A BA OR NOT IN STOP POSITION
AUTO REV. AND NO LAT-INDICATIONS PRESENT
LATCH STATUS-OPENING DISPLAY "OP" ON SET
BOTH LAT AND NO REV.-INDICATIONS PRESENT
LATCH STATUS-CLOSING DISPLAY "CL" ON SET
LAT LOCKT OR N-T-L-INDICATIONS OR LOCKT LATCH-INDICATIONS PRESENT
LATCH STATUS-TRANSITN DISPLAY "-" ON SET
LAT AND REV.-INDICATIONS PRESENT
LATCH STATUS-CLOSING DISPLAY "CT" ON SET
SET N-T-L STATUS TO ON
SET N-T-L STATUS TO OFF
DOOR STATUS-OPENING DISPLAY "OP" ON SET
BOTH LAT AND NO REV.-INDICATIONS AND BOTH P.B. AND AFT N-T-L STATUSES PRESENT
DOOR STATUS-CLOSING DISPLAY "CL" ON SET
NO OP AND NO CL-INDICATIONS AND BOTH P.B. AND AFT N-T-L STATUSES PRESENT
DOOR STATUS-READY TO LATCH DISPLAY "RDY" ON SET
DISPLAY "OP" ON TB
NO OP AND NO CL-INDICATIONS AND BOTH P.B. AND N-T-L STATUSES PRESENT
DOOR STATUS-TRANSITN DISPLAY "-" ON SET
ALL LATCH AND DOOR STATUSES CLOSED
DISPLAY "CT" ON TB
ALL LATCH AND DOOR STATUSES CLOSED
DISPLAY LATCH AND DOOR STATUS-TRANSITN
OP INDICATIONS AND BOTH N-T-L STATUSES PRESENT
DOOR STATUS-OPENING DISPLAY "OP" ON SET
OP AND CL-INDICATIONS AND BOTH N-T-L STATUSES PRESENT
DOOR STATUS-READY TO LATCH DISPLAY "RDY" ON SET
CL INDICATIONS AND BOTH N-T-L STATUSES PRESENT
DOOR STATUS-CLOSING DISPLAY "CT" ON SET
CL AND OP INDICATIONS AND BOTH N-T-L STATUSES PRESENT
DOOR STATUS-TRANSITN DISPLAY "-" ON SET
CL OR MORE OPEN AND 1 OR MORE CLOSED INDICATIONS PRESENT
TB STATUS-CLOSING DISPLAY "CT" ON SET
TCM LH PBD TBA BYPASSED AND TCM LH PBD TBA ON BYPASS SELECTED OR TBA N/A BA TO STOP PROCESSING
TCM LH PBD TBA BYPASS SELECTED OR TBA N/A BA OR NOT IN STOP POSITION
TCM AT POWER ENABLE ONES 1120 TO MCA'S
TCM 1140 POWER ON SELECTED
TCM 0140 POWER OFF SELECTED
TERMINATE AT POWER ENABLE ONES 1120 TO MCA'S
RETURN TO START
PBD AUTO OP MANUAL FLAG SET
PBD AUTO FLAG SET
TERMINATE PBD ONES TO MCA'S
RESET PBD MANUAL FLAG AND SET PBD AUTO FLAG
TERMINATE AND RESET PBD AUTO SEL
PBD AUTO FLAG SET
PBD MANUAL FLAG SET
TCM LH PBD TBA BYPASS CLOSED SELECTED OR TBA N/A BA OR STOP POSITION
TCM LH PBD TBA BYPASS OPEN SELECTED OR TBA N/A BA OR OPEN POSITION
TERMINATE OPEN ONES AND CLOSE TCM LATCH SELECTED OPEN ONES
TERMINATE CLOSE ONES AND CLOSE TCM LATCH SELECTED OPEN ONES
MANUAL SEQUENCE PROCESSING
AC POWER 28 12
AUTO MODE SEL 54 54
POWER ON/OFF 54 54
CENTER LATCHES 1 MAN 09 01
2 MAN 09 01
S-L 54 XXX
S-R 54 XXX
STBD 1 MAN 54 XXX
2 MAN 54 XXX
PORT LATCHES 1 MAN 11 XXX
2 MAN 11 XXX
DOOR 11 XXX
PBD TB BYPASS 144
PLBD SW STATUS
AUTO/STBY INDICATOR
SW BPS 202 PBD TB-CLOSED
SW BPS 203 TO TERM-MATED
PBD LATCH-DOOR STATUS-TRANSITN
POWER OFF-TCM
PBD OPEN/CLOSED STATUS
AUTO AND MANUAL MODE FLAGS
TERMINATE PBD ONES
RESET
SET
AUTO PLBD SEQUENCE PROCESSING
START
PERFORM D/L AND BRING LATCH LABELS FOR DIR DISPLAY
PERFORM DOOR AND ACKNOWLEDGE-TO-LATCH LABELS FOR DIR DISPLAY
PERFORM LABELS FOR TBS DISPLAY
PERFORM N/A OR EXIST FOR DIR DISPLAY
DISPLAY/ENABLE ALT POWER ENABLE ONES TO MCA'S
PERFORM AT SIDE TO TO BE SELECTED OR TERMINATE
TCM LH PBD TBA BYPASSED AND TCM LH PBD TBA ON BYPASS SELECTED OR TBA N/A BA TO STOP PROCESSING
TCM AUTO MODE SEL SELECTED
TCM N-H-V-I-TRANS SEL SELECTED
TCM LH PBD TBA BYPASS CLOSED SELECTED OR TBA N/A BA OR NOT IN STOP POSITION
TCM LH PBD TBA BYPASS OPEN SELECTED OR TBA N/A BA OR OPEN POSITION
TERMINATE OPEN ONES AND CLOSE TCM LATCH SELECTED OPEN ONES
TERMINATE CLOSE ONES AND CLOSE TCM LATCH SELECTED OPEN ONES
AUTO SEQUENCE STATUS CHECK
MONITOR ONES AND CLEAR OR RESPONSE OF LATCHED FOR PERFORMANCE
AUTO REV. AND NO LAT-INDICATIONS PRESENT
LATCH STATUS-OPENING
BOTH REV. AND NO LAT ONES PRESENT
LATCH STATUS-CLOSED
NO REV. AND NO LAT ONES PRESENT
LATCH STATUS-READY
BOTH LAT AND NO REV. ONES PRESENT
LATCH STATUS-CLOSING
NO LAT AND NO REV. ONES PRESENT
LATCH STATUS-TRANSITN
MONITOR ONES AND CLEAR OR RESPONSE OF DOORS FOR PERFORMANCE
AUTO OP AND NO CL-INDICATIONS AND NO N-T-L STATUSES PRESENT
DOOR STATUS-OPENING
AUTO OP ONES AND NO CL ONES PRESENT
DOOR STATUS-READY
NO OP AND NO CL ONES PRESENT
DOOR STATUS-CLOSED
NO OP AND NO CL-INDICATIONS AND BOTH N-T-L STATUSES PRESENT
DOOR STATUS-TRANSITN
AUTO CL AND NO OP-INDICATIONS AND BOTH N-T-L STATUSES PRESENT
DOOR STATUS-CLOSING
NO OP AND NO CL-ONES AND BOTH CL-INDICATIONS PRESENT
DOOR STATUS-TRANSITN
INITIATE AUTO SEQ
RETURN TO START
ITCM LH PBD TBA BYPASS AND ITCM LH PBD TBA BYPASS CLOSED SELECTED OR TBA N/A BA OR STOP POSITION
ITCM LH PBD TBA BYPASS AND ITCM LH PBD TBA BYPASS CLOSED SELECTED OR TBA N/A BA OR OPEN POSITION
PLBD AUTO OPEN SEQUENCE
MONITOR LATCHES AND DOORS FOR PROPER CLOSED OR SEQ OPERATION
LATCH-DOOR NOT ACTIVITIE (-ACTIV) (NOT PRESENT)
LATCH-DOOR STATUS BAD
RESET (TEM 1-14) POWER ON SET ITEM 2-61 POWER OFFS RESET AUTO FLAG
PBD OUT OF COMP'S-0
RETURN TO START
DETERMINE COMP'S OF LATCH GANG BEING OPENED
ANY DR BOTH REV.(OP-INDICATIONS) OR DEPENDENT GANG DOOR PRESENT
BOTH LATCH REV. INDICATIONS NOT PRESENT
LATCH GANG NOT OPENG CYN OPEN-MONITOR GANG
INITIAL ENTRY FOR THIS GANG
TERMINATE CLOSE ONES AND INITIATE TCM'S ONE-SEC START TIMER
TIMER HOR BEFORE TIME EXCEEDED TCM'S ONES SENT
TERMINATE OPEN ONES TO MCA'S RESET AUTO FLAG
PBD SEQ FAIL
RETURN TO START
REPEAT PROCEDURE (B) TO OPEN MONITOR PARALLEL CATCH GANG
LATCH GANG STAT-FWD AND AFT BKUP SENS OPEN
LATCH GANG O/L S-R AND R-I-D OPEN
LATCH GANG O/L S-R AND S-I-D
LATCH GANG STAT-FWD AND AFT BKUP SENS OPEN
PROCEED TO PROCEDURE (C) TO OPEN PORT DOOR
REPEAT PROCEDURE (B) TO OPEN LATCH GANG STAT-FWD AND AFT BKUP
REPEAT PROCEDURE (B) TO OPEN LATCH GANG O/L S-R AND R-I-D
DOOR SEQUENCE
DOOR STATUS-OPENING
DOOR STATUS-READY
DOOR STATUS-CLOSING
DOOR STATUS-TRANSITN
MONITOR LATCHES AND DOORS FOR PROPER CLOSED OR SEQ OPERATION
LATCH-DOOR NOT ACTIVITIE (-ACTIV) (NOT PRESENT)
LATCH-DOOR STATUS BAD
RESET (TEM 1-14) POWER ON, SET ITEM 2-61 POWER OFFS, RESET AUTO FLAG
PBD OUT OF COMP'S-0
RETURN TO START
DETERMINE COMP'S OF DOOR BEING CLOSED
ANY DR BOTH REV.(OP-INDICATIONS) OR DEPENDENT DOOR PRESENT
BOTH DOOR REV. INDICATIONS NOT PRESENT
DOOR OPEN MONITOR-TIME
INITIAL ENTRY FOR DOOR
TERMINATE CLOSE ONES AND INITIATE TCM'S ONE-SEC START TIMER
TIMER HOR BEFORE TIME EXCEEDED TCM'S ONES SENT
TERMINATE OPEN ONES TO MCA'S RESET AUTO FLAG
PBD SEQ FAIL
RETURN TO START
DOOR STATUS-OPEN
PROCEED TO PROCEDURE (C) TO OPEN PORT DOOR AND AFT BKUP DOOR
PLBD AUTO CLOSE SEQUENCE
MONITOR LATCHES AND DOORS FOR PROPER CLOSED OR SEQ OPERATION
LATCH-DOOR NOT ACTIVITIE (-ACTIV) (NOT PRESENT)
LATCH-DOOR STATUS BAD
RESET (TEM 1-14) POWER ON, SET ITEM 2-61 POWER OFFS, RESET AUTO FLAG
PBD OUT OF COMP'S-0
RETURN TO START
DETERMINE COMP'S OF DOOR BEING CLOSED
BOTH CL INDICATIONS PRESENT
INTERNAL DOOR FLAG SET
INTERNAL DOOR FLAG SET
TERMINATE CLOSE ONES TO MCA'S RESET AUTO FLAG
PBD SEQ FAIL
RETURN TO START
BOTH CL INDICATIONS PRESENT
INTERSECTION STATUS FLAGS, TERMINATE CLOSE ONES TO MCA'S, RESET AUTO FLAG
PBD SEQ FAIL
RETURN TO START
DOOR NOT CLOSED, ONE CLOSED PAIR FOR DOOR
INITIAL ENTRY FOR THIS DOOR
TERMINATE OPEN ONES AND INITIATE TCM'S ONE-SEC START TIMER
TIMER HOR BEFORE TIME EXCEEDED TCM'S ONES SENT
TERMINATE CLOSE ONES TO MCA'S RESET AUTO FLAG
PBD SEQ FAIL
RETURN TO START
DETERMINE COMP'S OF LATCH GANG BEING CLOSED
LATCH-DOOR NOT ACTIVITIE (-ACTIV) (NOT PRESENT)
LATCH-DOOR STATUS BAD
RESET (TEM 1-14) POWER ON, SET ITEM 2-61 POWER OFFS, RESET AUTO FLAG
PBD OUT OF COMP'S-0
RETURN TO START
LATCH-DOOR NOT ACTIVITIE (-ACTIV) (NOT PRESENT)
LATCH-DOOR STATUS BAD
RESET (TEM 1-14) POWER ON, SET ITEM 2-61 POWER OFFS, RESET AUTO FLAG
PBD OUT OF COMP'S-0
RETURN TO START
DETERMINE COMP'S OF DEPENDENT GANG DOOR PRESENT
BOTH LATCH LAT INDICATIONS NOT PRESENT
LATCH GANG NOT CLOSEN, ONE CLOSED PAIR FOR LATCH GANG
INITIAL ENTRY FOR THIS GANG
TERMINATE OPEN ONES AND INITIATE TCM'S ONE-SEC START TIMER
TIMER HOR BEFORE TIME EXCEEDED TCM'S ONES SENT
TERMINATE CLOSE ONES TO MCA'S RESET AUTO FLAG
PBD SEQ FAIL
RETURN TO START
REPEAT PROCEDURE (B) TO CLOSE MONITOR PARALLEL CATCH GANG
LATCH GANG DOOR-TIME ONES AND NOT CLOSED
LATCH GANG O/L S-R AND R-I-D NOT CLOSED
LATCH GANG O/L S-R AND S-I-D NOT CLOSED
LATCH GANG STAT-FWD AND AFT BKUP NOT CLOSED
LATCH GANG PORT FWD AND AFT BKUP NOT CLOSED
INTERNAL DOOR FLAG SET
PROCEED TO PROCEDURE (C) TO CLOSE PORT DOOR
REPEAT PROCEDURE (B) TO CLOSE LATCH GANG O/L S-R AND R-I-D
TERMINATE CLOSE ONES TO MCA'S RESET AUTO FLAG
RESET PROCEDURE (B) TO CLOSE LATCH GANG O/L S-R AND R-I-D
RETURN TO START
PLBD AUTO CLOSE SEQUENCE
MONITOR LATCHES AND DOORS FOR PROPER CLOSED OR SEQ OPERATION
LATCH-DOOR NOT ACTIVITIE (-ACTIV) (NOT PRESENT)
LATCH-DOOR STATUS BAD
RESET (TEM 1-14) POWER ON, SET ITEM 2-61 POWER OFFS, RESET AUTO FLAG
PBD OUT OF COMP'S-0
RETURN TO START
DETERMINE COMP'S OF DOOR BEING CLOSED
BOTH CL INDICATIONS PRESENT
INTERNAL DOOR FLAG SET
INTERNAL DOOR FLAG SET
TERMINATE CLOSE ONES TO MCA'S RESET AUTO FLAG
PBD SEQ FAIL
RETURN TO START
BOTH CL INDICATIONS PRESENT
INTERSECTION STATUS FLAGS, TERMINATE CLOSE ONES TO MCA'S, RESET AUTO FLAG
PBD SEQ FAIL
RETURN TO START
DOOR NOT CLOSED, ONE CLOSED PAIR FOR DOOR
INITIAL ENTRY FOR THIS DOOR
TERMINATE OPEN ONES AND INITIATE TCM'S ONE-SEC START TIMER
TIMER HOR BEFORE TIME EXCEEDED TCM'S ONES SENT
TERMINATE CLOSE ONES TO MCA'S RESET AUTO FLAG
PBD SEQ FAIL
RETURN TO START
DETERMINE COMP'S OF LATCH GANG BEING CLOSED
LATCH-DOOR NOT ACTIVITIE (-ACTIV) (NOT PRESENT)
LATCH-DOOR STATUS BAD
RESET (TEM 1-14) POWER ON, SET ITEM 2-61 POWER OFFS, RESET AUTO FLAG
PBD OUT OF COMP'S-0
RETURN TO START
LATCH-DOOR NOT ACTIVITIE (-ACTIV) (NOT PRESENT)
LATCH-DOOR STATUS BAD
RESET (TEM 1-14) POWER ON, SET ITEM 2-61 POWER OFFS, RESET AUTO FLAG
PBD OUT OF COMP'S-0
RETURN TO START
DETERMINE COMP'S OF DEPENDENT GANG DOOR PRESENT
BOTH LATCH LAT INDICATIONS NOT PRESENT
LATCH GANG NOT CLOSEN, ONE CLOSED PAIR FOR LATCH GANG
INITIAL ENTRY FOR THIS GANG
TERMINATE OPEN ONES AND INITIATE TCM'S ONE-SEC START TIMER
TIMER HOR BEFORE TIME EXCEEDED TCM'S ONES SENT
TERMINATE CLOSE ONES TO MCA'S RESET AUTO FLAG
PBD SEQ FAIL
RETURN TO START
REPEAT PROCEDURE (B) TO CLOSE MONITOR PARALLEL CATCH GANG
LATCH GANG DOOR-TIME ONES AND NOT CLOSED
LATCH GANG O/L S-R AND R-I-D NOT CLOSED
LATCH GANG O/L S-R AND S-I-D NOT CLOSED
LATCH GANG STAT-FWD AND AFT BKUP NOT CLOSED
LATCH GANG PORT FWD AND AFT BKUP NOT CLOSED
INTERNAL DOOR FLAG SET
PROCEED TO PROCEDURE (C) TO CLOSE PORT DOOR
REPEAT PROCEDURE (B) TO CLOSE LATCH GANG O/L S-R AND R-I-D
TERMINATE CLOSE ONES TO MCA'S RESET AUTO FLAG
RESET PROCEDURE (B) TO CLOSE LATCH GANG O/L S-R AND R-I-D
RETURN TO START
ALTERNATE DOOR MODE TO TERMINATING THE ITEM 3 ACTION OF PROCEDURE (B) (ONE-SEC TIMER) THE LATCH-DO NOT BE TIMED (ETC. THIS MADE ON)
DISPLAY PROCESS-ME AND STATUS CHECK SEQUENCE CONT-NUES IN EXISTED CIRCUMSTANCES ALTH AUTO OPEN-CLOSE SEQUENCE
AUTO MODE SEQUENCES
OPEN SEQUENCE
CLOSE SEQUENCE
DOOR SEQUENCE
LATCH-DOOR
DEPENDENT GROUP
LATCH SEQUENCE
OPEN SEQUENCE
CLOSE SEQUENCE
INITIAL LATCH GANGS FOR OPEN SEQUENCE ARE O/L S-R, S-I-D OR RESET L-INE
INITIAL DOOR FOR CLOSE SEQUENCE IS PORT DOOR
TOTAL OF 4 OPEN AND 4 CLOSE INDICATIONS FOR PLBD CONTROL SWITCH (TYPE, PLUS SET)
PERFORM FOR EACH READY-TO-LATCH MODULE-I-S FOR DOORS, FORWARD AND AFT)
PERFORM FOR BOTH STARBOARD AND PORT DOORS
PERFORM FOR EACH CENTER-LINE AND BULKHEAD LATCH GANG
NOTES: 1. FOR DRAWING REFERENCES SEE TABLE IN L. NUMBERS/LETTERS IN PARENTHESES NOTE TO START L-IN THE REFERENCED DRAWINGS.
2 PLBD SW OV 2
PLBD SOFTWARE OVERVIEW I PASS AND BFS1
SIGNATURE DATE
DSGN. B.J.TOOKER JR. 8/9/83
DR B.J.TOOKER JR. 8/9/83
CHAR J.J. FLYNN
CHK'D
APP'D
MFG/APPD
SHEET 14.2
SIZE B
DWG NO. 2 PLBD SW OV 2
REV E
SHEET 1 OF 1
BASIC REV E

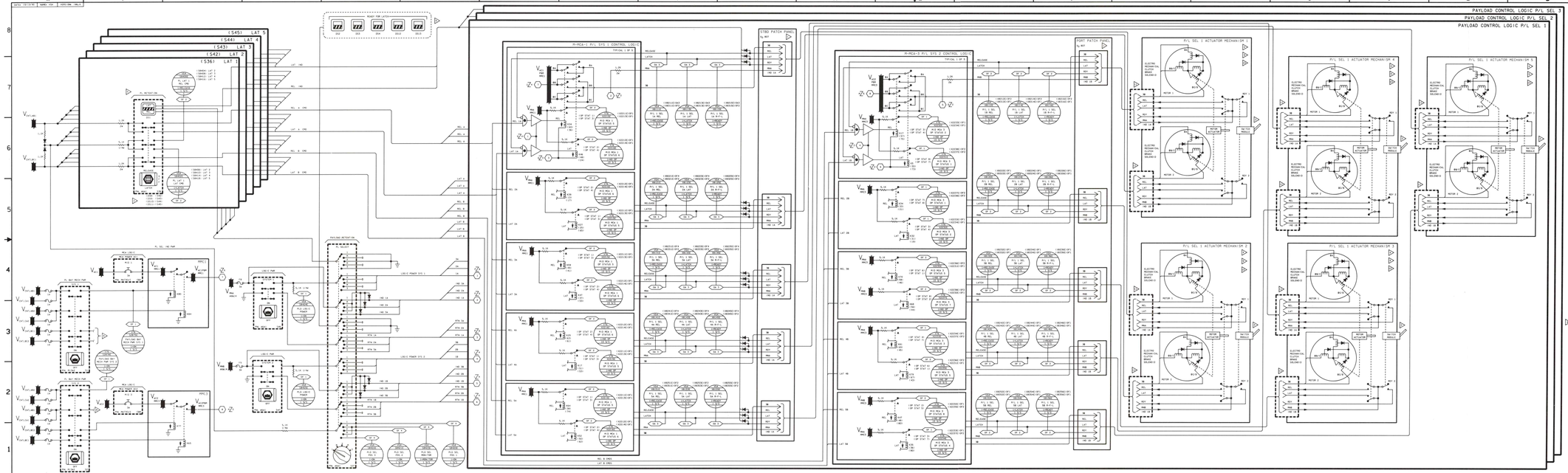

SYS	P/L	P/L SEL	P/L BAY	P/L SEL	ACT MECH	MOTR	DWG	TB	MBM	TB
1	1	SEL #1	A1	P/L SEL 1	ACT MECH 1	MOTR 1	1R4400101	J1 P1 P2	J1 P1	1R4400400 REL ONE 1R4400410 LAT ONE
						MOTR 2	1R4400102	J1 P1 P2		
						MOTR 3	1R4400103	J1 P1 P2		
						MOTR 4	1R4400104	J1 P1 P2		
		SEL #2	A2		ACT MECH 2	MOTR 1	1R4400105	J1 P1 P2	J2 P1	
						MOTR 2	1R4400106	J1 P1 P2		
						MOTR 3	1R4400107	J1 P1 P2		
						MOTR 4	1R4400108	J1 P1 P2		
	2	SEL #1	A1	P/L SEL 2	ACT MECH 1	MOTR 1	1R4400109	J1 P1 P2	J3 P1	
						MOTR 2	1R4400110	J1 P1 P2		
						MOTR 3	1R4400111	J1 P1 P2		
						MOTR 4	1R4400112	J1 P1 P2		
		SEL #2	A2		ACT MECH 2	MOTR 1	1R4400113	J1 P1 P2	J4 P1	
						MOTR 2	1R4400114	J1 P1 P2		
						MOTR 3	1R4400115	J1 P1 P2		
						MOTR 4	1R4400116	J1 P1 P2		
	3	SEL #1	A1	P/L SEL 3	ACT MECH 1	MOTR 1	1R4400117	J1 P1 P2	J5 P1	
						MOTR 2	1R4400118	J1 P1 P2		
						MOTR 3	1R4400119	J1 P1 P2		
						MOTR 4	1R4400120	J1 P1 P2		
		SEL #2	A2		ACT MECH 2	MOTR 1	1R4400121	J1 P1 P2	J6 P1	
						MOTR 2	1R4400122	J1 P1 P2		
						MOTR 3	1R4400123	J1 P1 P2		
						MOTR 4	1R4400124	J1 P1 P2		
2	1	SEL #1	A1	P/L SEL 1	ACT MECH 1	MOTR 1	1R4400125	J1 P1 P2	J1 P1	1R4400400 REL ONE 1R4400410 LAT ONE
						MOTR 2	1R4400126	J1 P1 P2		
						MOTR 3	1R4400127	J1 P1 P2		
						MOTR 4	1R4400128	J1 P1 P2		
		SEL #2	A2		ACT MECH 2	MOTR 1	1R4400129	J1 P1 P2	J2 P1	
						MOTR 2	1R4400130	J1 P1 P2		
						MOTR 3	1R4400131	J1 P1 P2		
						MOTR 4	1R4400132	J1 P1 P2		
	2	SEL #1	A1	P/L SEL 2	ACT MECH 1	MOTR 1	1R4400133	J1 P1 P2	J3 P1	
						MOTR 2	1R4400134	J1 P1 P2		
						MOTR 3	1R4400135	J1 P1 P2		
						MOTR 4	1R4400136	J1 P1 P2		
		SEL #2	A2		ACT MECH 2	MOTR 1	1R4400137	J1 P1 P2	J4 P1	
						MOTR 2	1R4400138	J1 P1 P2		
						MOTR 3	1R4400139	J1 P1 P2		
						MOTR 4	1R4400140	J1 P1 P2		
	3	SEL #1	A1	P/L SEL 3	ACT MECH 1	MOTR 1	1R4400141	J1 P1 P2	J5 P1	
						MOTR 2	1R4400142	J1 P1 P2		
						MOTR 3	1R4400143	J1 P1 P2		
						MOTR 4	1R4400144	J1 P1 P2		
		SEL #2	A2		ACT MECH 2	MOTR 1	1R4400145	J1 P1 P2	J6 P1	
						MOTR 2	1R4400146	J1 P1 P2		
						MOTR 3	1R4400147	J1 P1 P2		
						MOTR 4	1R4400148	J1 P1 P2		
P/L BAY MCA			B1				1R4400149		J1 P1 MCA PWR (SYS 2)	
P/L BAY MCA			B2				1R4400150		J1 P1 MCA PWR (SYS 1)	
P/L SEL 1 MCA							1R4400780		J1 P1 MCA PWR	
P/L SEL 2 MCA							1R4400781		J2 P1 MCA PWR	
P/L SEL 3 MCA							1R4400810		J3 P1 MCA PWR	
P/L SEL 4 MCA							1R4400811		J4 P1 P/L MCA	
P/L SEL 5 MCA							1R4400812		J5 P1 P/L MCA	
							1R4400830		J6 P1 P/L NON-TDF	

RETRACTOR MOTOR
DUAL MOTOR 50 OZ
SINGLE MOTOR 30 OZ

* MAXIMUM TIMES UNDER FULL LOAD CONDITIONS (SPRING COMPLETE STROKE)

△ P/L BAY ACTUATOR MECHANISMS INTERFACE THE FLIGHT PATCH PANELS THROUGH THE P/L BAY MCA'S AND THE P/L SEL 1, 2, 3 MCA'S. THE P/L BAY MCA'S INTERFACE TO ELECTRICAL LOAD CELL MECHANISMS, OR OTHER P/L RELATED AC MOTOR ACTUATOR MECHANISMS

△ INTERFACES ON AC RETENTION CIRCUITRY ARE ACCOMPLISHED VIA THE PAYLOAD RETENTION MOTOR CONTROLLER (PRMC). THE PRMC PROVIDES CONFIGURATIONAL 10 STATE/LINES OR PL/CMD SPACE-TO-PL RETENTION SUBSYSTEM ELECTRICAL SIGNALS/CELL TO CELL INTERFACES.

△ MAXIMUM AC POWER REQUIRED IS 270 WATTS/MOTOR AT 115VL AND 400HZ. MAXIMUM DC POWER REQUIRED IS 270 WATTS FOR MOTOR STARTING THE MOTORS ARE NOT FULL RATED LOAD

△ CONTACTS NOT USED FOR PAYLOAD RETENTION LATCHES

△ FOR SPARE/NO REFERENCES SEE TABLE 14.3-1

△ LOSS OF CONTROL BUS BC1 OR BC2 W/ALL RESULT IN LOSS OF A/C 2 AND SUBSEQUENT LOSS OF SYS 2 MOTOR PO FOR THE LOSS OF P/L RETENTION SYSTEM

△ ONLY SIGNALS FROM THE SYSTEM 4 MICROPROCESSOR ON P/L SEL 1, 2, 3 MCA'S ARE THE 3 LATCH, RELEASED, AND PRELATCH AND LATCH TALKBACKS. ANALOGS, SIGNALS FROM BOTH SYSTEM 4 AND 8 IMPLIED MOTOR CURRENT AND RPC AND BRAKE STATUS

△ MAXIMUM OF TWO P/L RETENTION LATCH ACTUATORS MAY BE OPERATED SIMULTANEOUSLY FROM ONE P/L SEL 1, 2, 3 MCA ACTUATOR

△ 0.8 FORCE MAX, ROLL ROD/REST OF ACTUATE W/ 1.1 ROLLING FOR MOTOR TO RELEASE LATCH (MAX.) - 0.8 FORCE MAX, ROLL/REST OF ACTUATE W/ 1.1 ROLLING FOR MOTOR TO RELEASE LATCH (MAX.) - 0.8 FORCE MAX, ROLL/REST OF ACTUATE W/ 1.1 ROLLING FOR MOTOR TO RELEASE LATCH (MAX.)

△ PANEL REFLECTS ALL AVAILABLE PATTERNS, SYN, INS, INS, SYN, AND SYN

NOTES: 1. 4/8 MS COMMUNICATIONS TO P/L ACTUATOR MECHANISM ARE BY FLIGHT DATABASE, ALL OTHER BY MDM, AS SHOWN.

3 PL RET LAT

SIGNATURES	DATE
ITEM L. M. McDONNELL	3-1-83
BY M. A. McDONNELL	3-1-83
CHIEF, S.E. (Systems)	
CHIEF, S.E. (Integration)	3-1-83
CHIEF, Mission Integration	3-1-83
CHIEF, Flight Design & Dynamics	3-1-83
CHIEF, Payload Integration	3-1-83

NOTING CORRECTIONS MADE DURING IMPLEMENTATION OF MCR'S & OTHER MINOR CHANGES

PAYLOAD RETENTION LATCH ELECTRICAL

SPACE SHUTTLE SYSTEM	DOC NO. 14.3
REV	SHEET 1 OF 1

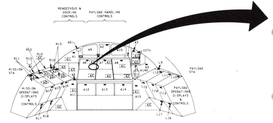

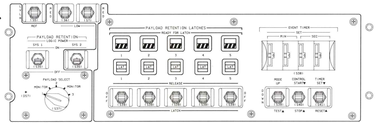

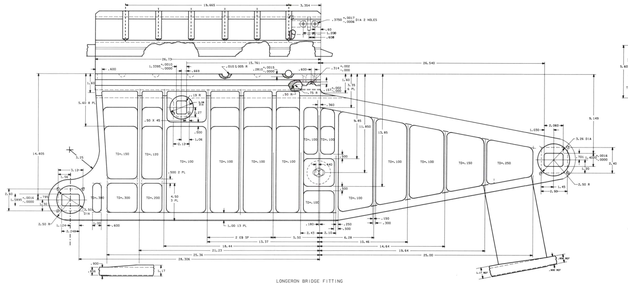

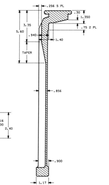

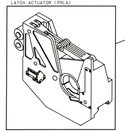

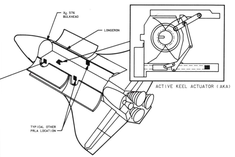

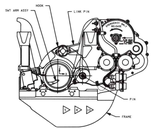

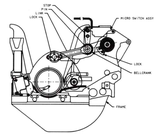

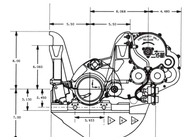

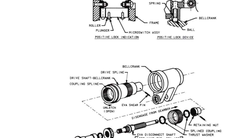

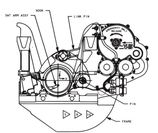

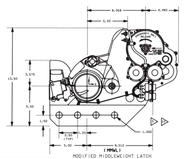

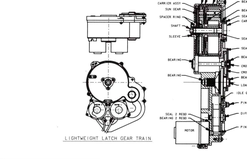

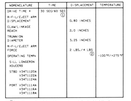

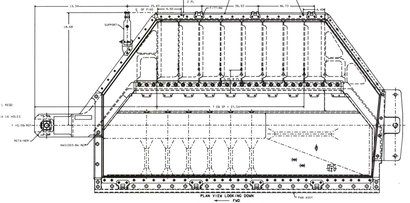

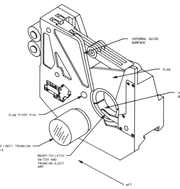

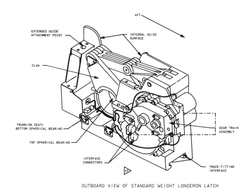

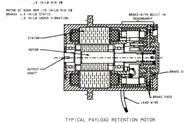

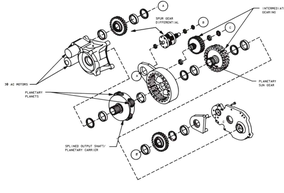

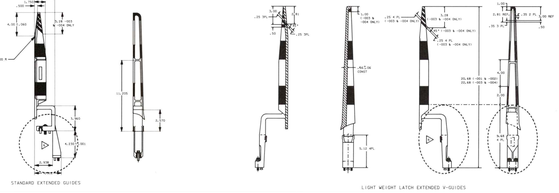

MATERIALS LIST	CLAD	CLEVIS WIDTH	TEMPERATURE
SM-HC TYPE II A-F-I-U-LAST-ARM D-SPLASHPOT SM-HC-LWL-MWL-SWL BLOCK TRUNK-ON TRUNK-OFF A-F-I-U-LAST-ARM FORCE SPECIFIC ALLOWS MARGIN SOLDERED STBD CAPTURE CAPTURE PORT CAPTURE CAPTURE	30 MILS MIN TOT 0.40 INCHES 0.10 INCHES 5.25 INCHES 2.25 LBS/FT (1) (2)		(3)(4)(5)(6)(7)(8)(9)

(1) SEAL MOTOR AND S-HALE MOTOR SM-HC TYPE RESPECTIVELY.
(2) W.F.C. ACT=547.2# FORCE/TRUNK-ON FLIGHT FORCE

DATE: 9/23/93	NAME: JAC	CONTRACT: CNAS
DATE: 9/23/93	NAME: PAUL	CONTRACT: CNAS
DATE: 9/23/93	NAME: JAC	CONTRACT: CNAS

BASIC REV E

BASIC REV E

1. THE LONGERON BRIDGE, MIDDLEWEIGHT, MID-(FLEX-IN-BOLDER)-KEEL, SUPER MIDDLEWEIGHT, AND STANDARD WEIGHT LONGERON LATCHES ARE ALL SIGNAL BY LEFTHANDED VERTICAL (CENTRAL) LEFT HAT MOTOR MOUNTED ONE SIDE OF THE LATCH BODY. THE LIGHTWEIGHT LONGERON LATCH IS SIGNALED BY BOTH ARE RIGHTHAND VERSIONS OF THESE OTHER AND VERTICALLY IDENTICAL.

2. MOTOR FORWARD AKA VERTICAL SIGNAL MOTOR LEFT VERTICAL SIGNAL MOTOR RIGHT VERTICAL SIGNAL MOTOR

3. THE LIGHTWEIGHT, MIDDLEWEIGHT, AND SUPER MIDDLEWEIGHT LONGERON LATCHES HAVE IDENTICAL PHYSICAL DIMENSIONS AS SHOWN FOR THE LWLL.

4. FOR DRAWING REFERENCES SEE TABLE XXX.

5. THE MAIN DIFFERENCE AS A STANDARD EXTENDED GUIDE ON A LIGHTWEIGHT EXTENDED GUIDE IS THE INTERFACE WHERE THE LIGHTWEIGHT

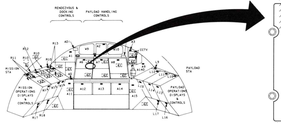

AFT FLIGHT DECK CONFIGURATION
VIEW LOOKING AFT

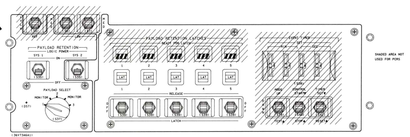

PAYLOAD RETENTION SYSTEM CONTROLS

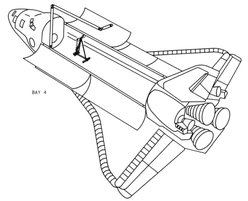

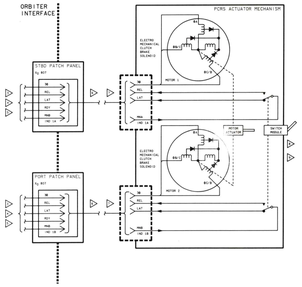

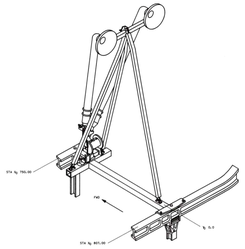

PCRS SUPPORT STRUCTURE
TYPICAL BAY 4 INSTALLATION

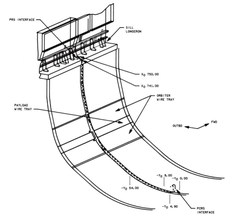

PCRS UNIQUE EXTENDER CABLES

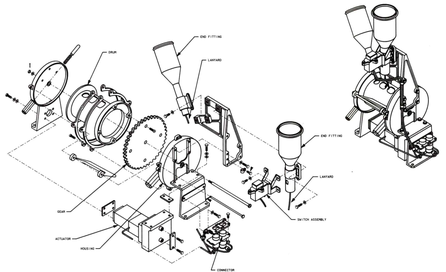

PCRS ACTUATOR MECHANISM

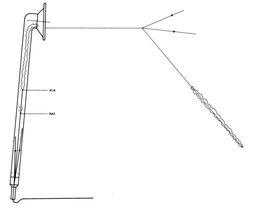

COVER STOWAGE IN SECONDARY PCRS FUNNEL

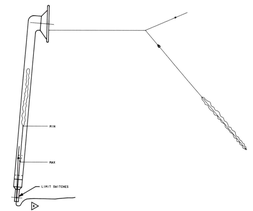

COVER STOWAGE IN PRIMARY PCRS FUNNEL

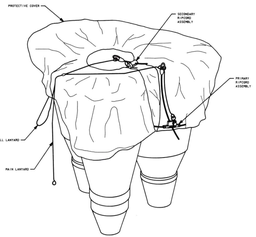

TYPICAL PROTECTIVE COVER ASSEMBLY
MULTIPLE LENS/SUNSHADE CONFIGURATION

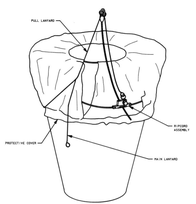

TYPICAL PROTECTIVE COVER ASSEMBLY
SINGLE LENS/SUNSHADE CONFIGURATION

1. PCRS DRIVE TIMES / LANYARD/DOOR TRAVEL DISTANCES ARE FLIGHT DEPENDENT. LANYARD PULL RATES SHALL BE:
   DUAL MOTOR: 1.2 IN./SEC
   SINGLE MOTOR: 0.6 IN./SEC

3 PCRS 3

SIGNATURE	DATE	MATERIAL, DIMENSIONS AND FINISH SPECIFICATION PER MIL-STD-100 AND LOCAL DRAFTING STDS
CHIEF, S. CREW SYSTS	7/14/82	
DIR, S. CREW SYSTS	7/14/82	
CHIEF, S/W & HDWR		PROTECTIVE COVER REMOVAL SYSTEM
CHIEF, S/W & HDWR		
CHIEF, S/W & HDWR		
APP. SYSTEMS	7/14/82	SPACE SHUTTLE
MANAGER, P.P. INTEGRATION	7/14/82	
ENG	DATE	SCALE: N/A

DWG NO: 14.3

SHEET 1 OF 1

BASIC REV E

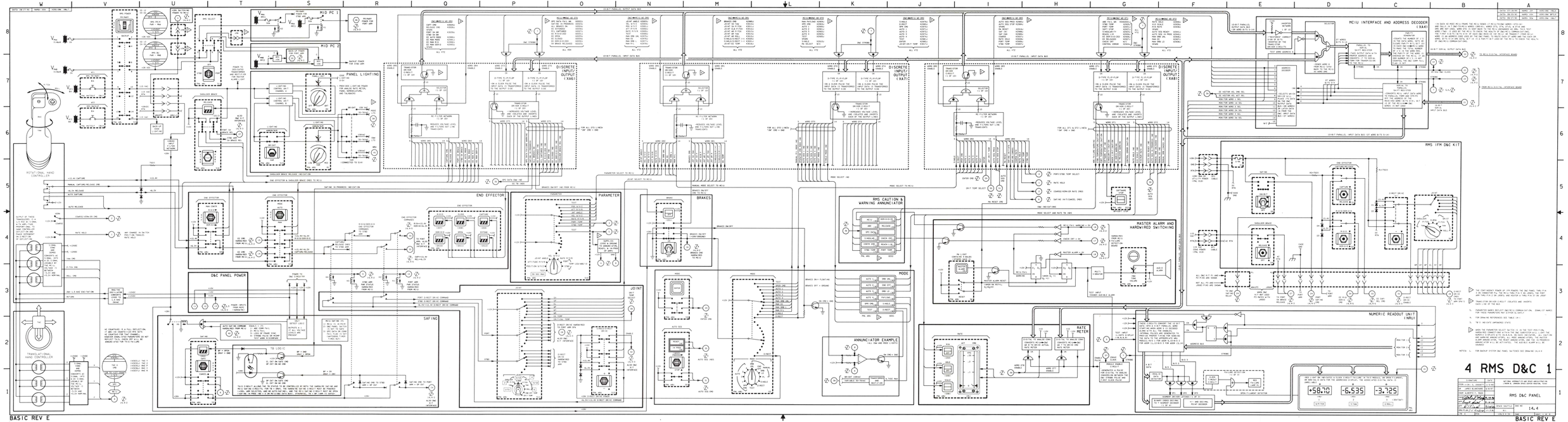

MID PC 1
MID PC 2
PANEL LIGHTING
DISCRETE INPUT/ OUTPUT (X46)
DISCRETE INPUT/ OUTPUT (X47)
DISCRETE INPUT/ OUTPUT (X48)
MCIU INTERFACE AND ADDRESS DECODER (X44)
RMS IFM D&C KIT
ROTATIONAL HAND CONTROLLER
END EFFECTOR
PARAMETER
BRAKES
RMS CAUTION & WARNING ANNUNCIATOR
MASTER ALARM AND HARDWIRED SWITCHING
D&C PANEL POWER
JOINT
MODE
SAFING
TRANSLATIONAL HAND CONTROLLER
ANNUNCIATOR EXAMPLE
RATE METER
NUMERIC READOUT UNIT (NRU)
+5.80
-6.535
-3.725
4 RMS D&C 1
RMS D&C PANEL
14.4
BASIC REV E
BASIC REV E

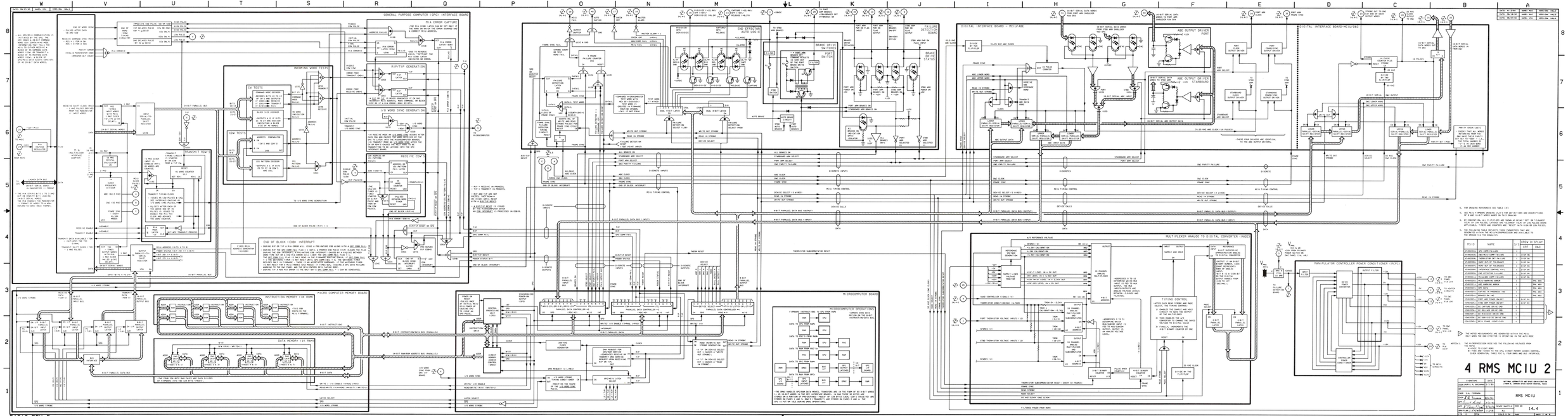
GENERAL PURPOSE COMPUTER (GPC) INTERFACE BOARD
MICRO COMPUTER MEMORY BOARD
MICROCOMPUTER BOARD
MICROCOMPUTER OPERATIONS
DIGITAL INTERFACE BOARD - MCIU/ABE
MULTIPLEXER ANALOG TO DIGITAL CONVERTER (MADC)
MANIPULATOR CONTROLLER POWER CONDITIONER (MCPC)
END OF BLOCK (EOB) INTERRUPT
BASIC REV E
4 RMS MCIU 2
RMS MCIU
14.4
BASIC REV E

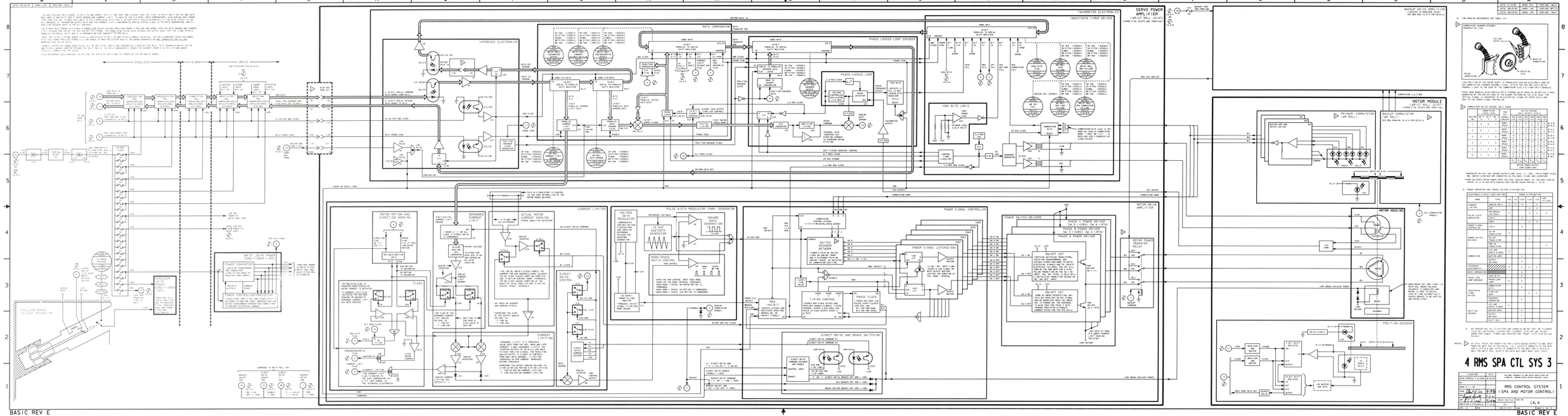
SERVO POWER AMPLIFIER
WRIST ROLL JOINTS
(SIMILAR FOR JOINTS ARE IDENTICAL)
BACKUP DRIVE AMPLIFIER
SEE MAX DWG 24.V.4 FOR DETAILS
MOTOR MODULE
WRIST ROLL JOINTS
(OTHER FOR JOINTS ARE IDENTICAL)
SEE MAX DRAWING 24.V.4 FOR DETAILS
INTERFACE ELECTRONICS
RATE COMPARATOR
PHASE LOCKED LOOP ENCODER
TACHOMETER ELECTRONICS
INDUCTOSYN TIMER DRIVER
+28V BITE LOGIC
CURRENT LIMITER
MOTOR MOTION AND DIRECTION SENSING
DEMANDED CURRENT (-IM)
ACTUAL MOTOR CURRENT SENSING
PULSE WIDTH MODULATOR (PWM) GENERATOR
VOLTAGE REGULATOR
POWER SIGNAL CONTROLLER
POWER SWITCH DRIVERS
PHASE A POWER DRIVER
PHASE B POWER DRIVER
DIRECT DRIVE AND BRAKE SWITCHING
MOTOR POWER TRANSFER RELAY
MOTOR DRIVE AMPLIFIER
PRIMARY COMMUTATOR (-WR1 ROLL)
BACKUP COMMUTATOR (-WR2 ROLL)
MOTOR HOUSING
POSITION ENCODER
SHOULDER
ELBOW
WRIST
2ND SYSTEM WRIST BITS
WRIST JOINT POWER CONVERTER UNIT
SHOULDER POWER CONVERTER UNIT
SHOULDER BRAKE RELEASE PROVISION
COMMUTATOR SWITCH DECODE (HEX CHART)
COMMUTATOR SWITCH DECODE (BCD CHART)
4 RMS SPA CTL SYS 3
RMS CONTROL SYSTEM
(SPA AND MOTOR CONTROL)
14.4
BASIC REV E

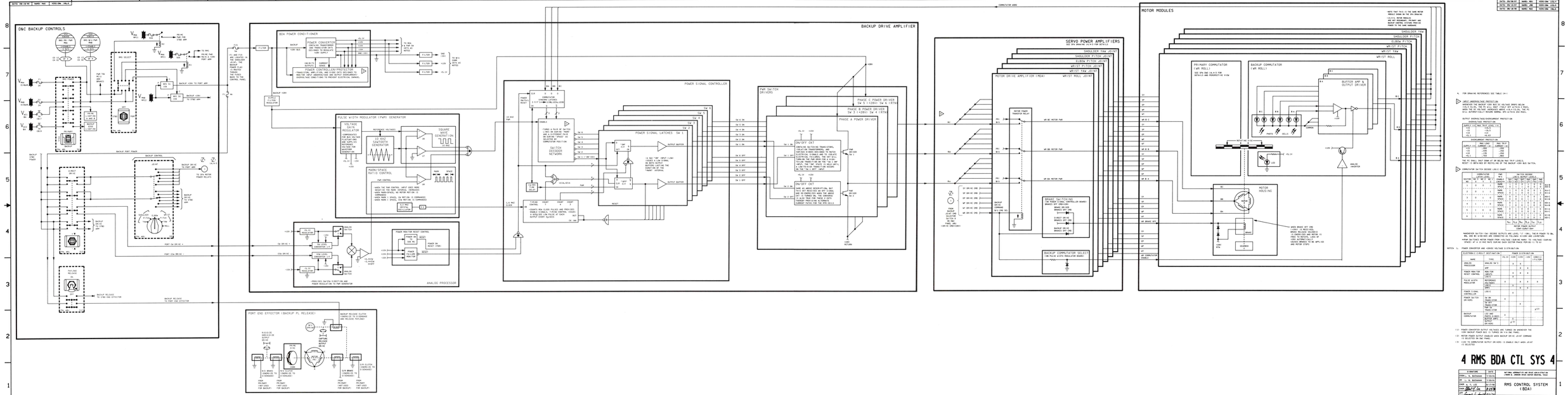
O&C BACKUP CONTROLS
BACKUP DRIVE AMPLIFIER
BDA POWER CONDITIONER
POWER SIGNAL CONTROLLER
PULSE WIDTH MODULATOR (PWM) GENERATOR
ANALOG PROCESSOR
PWR SWITCH DRIVERS
SERVO POWER AMPLIFIERS
MOTOR MODULES
PORT END EFFECTOR (BACKUP PL RELEASE)
BACKUP CONTROL
BACKUP PORT POWER
BACKUP RELEASE TO END EFFECTOR
BACKUP RELEASE TO PORT END EFFECTOR
BACKUP +28V TO PORT AMP
BACKUP +28V TO STBD AMP
BACKUP +28V TO MOTOR POWER RELAYS
BACKUP DRIVE PORT AMP +28V
BACKUP DRIVE STBD AMP +28V
BACKUP +5V TO STBD AMP
BACKUP +5V TO PORT AMP
BACKUP +28V TO STBD AMP
BACKUP +28V TO PORT AMP
BACKUP +28V TO MOTOR POWER RELAYS
BACKUP +28V TO BDA
BACKUP +28V TO PORT AMP
BACKUP +28V TO STBD AMP

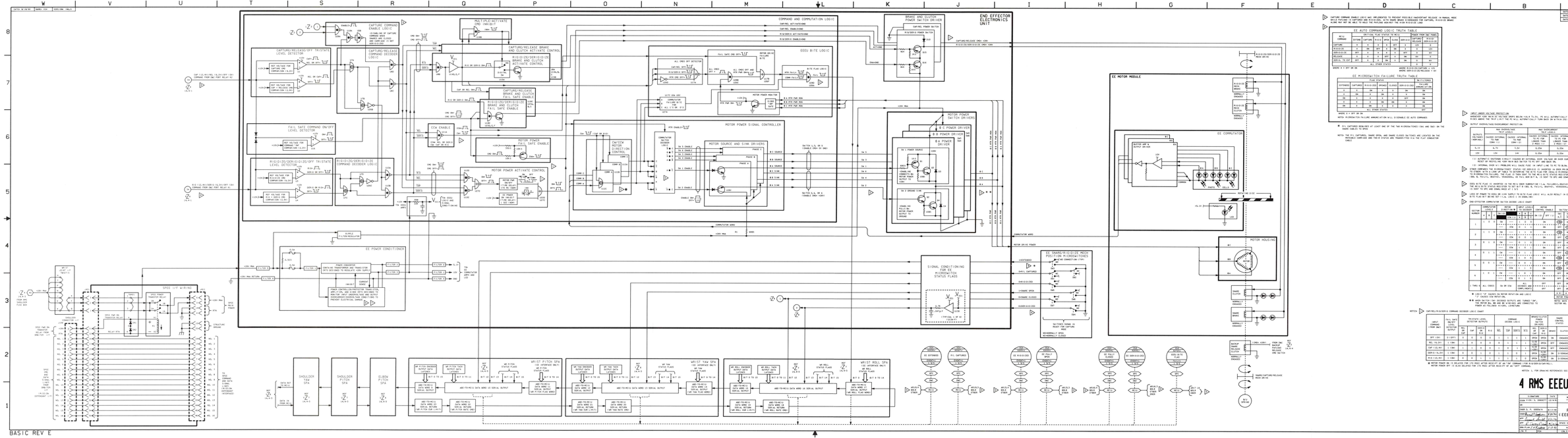

BASIC REV E

BASIC REV F

SHOULDER

ELBOW

WRIST

END EFFECTOR

SYSTEM A

SYSTEM B

THERMISTOR LOCATION

4 RMS HTR 6

RMS THERMOSTAT/HEATER ELEMENTS

14.4

BASIC REV E

BASIC REV E

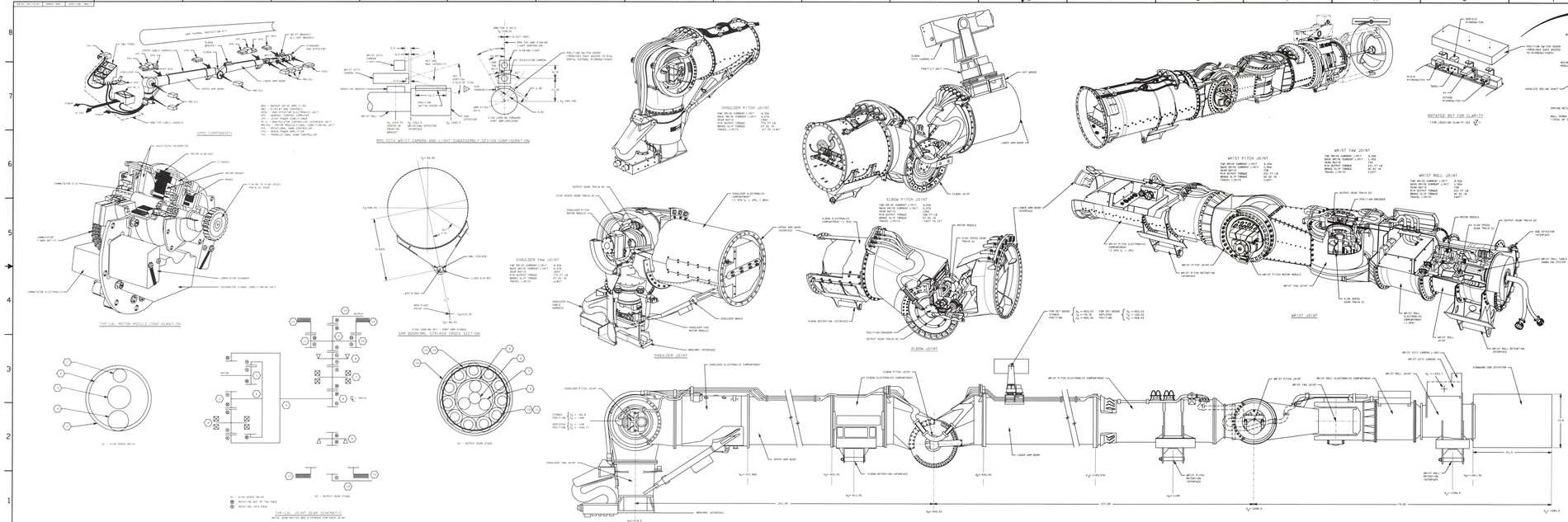

DATE	REVISION	APPVD
10/15/98	SAMS-LSR	ORIGINAL RELEASE
10/15/98	SAMS-LSR	ORIGINAL RELEASE
10/15/98	SAMS-LSR	ORIGINAL RELEASE

JOINT	CCI SPEC TRAVEL	HARD LIMIT TRAVEL	SOFTWARE STOP	MECHANICAL STOP LOCATION
SHOULDER YAW	+180°	+175.47°	+171.47°	0.47°	+180°
	-180°	-175.47°	-171.47°		-180°
SHOULDER PITCH	+125°	+129.47°	+125.47°	0.47°	+125.47°
	-125°	-129.47°	-125.47°		-125.47°
ELBOW PITCH	+135°	+138.47°	+134.47°	0.47°	+134.47°
	-135°	-138.47°	-134.47°		-134.47°
WRIST PITCH	+120°	+124.47°	+120.47°	0.47°	+120.47°
	-120°	-124.47°	-120.47°		-120.47°
WRIST YAW	+170°	+174.47°	+170.47°	4.71°	+174.47°
	-170°	-174.47°	-170.47°		-174.47°
WRIST ROLL	+97°	+101.5°	+101°	5.5°	+97°
	-97°	-101.5°	-101°		-97°

1. THIS GEAR ONLY REPEATED ON A BEVEL GEAR IS NOT RIGIDLY ATTACHED TO THE INVOLUTE SPLINE SHAFT.
2. FOR DRAWING REFERENCES SEE TABLE 4-1.
3. ASSUMES MAXIMUM KIT CLEARING TOL
NOTES: 1. ALL DIMENSIONS ARE IN INCHES

4 MECH OV 7

SIGNATURE	DATE
ITEM - J. A. KELLY	8/13/98
CI - J. A. KELLY	8/13/98
DSNE - J. A. HOWARD	8/13/98
PA - Donald C. Nolan	8/13/98
QA - Donald C. Nolan	8/13/98
MFG - Ronald Rivera	8/13/98
ENGINEER - Ronald Rivera	8/13/98
CM - Ronald Rivera	8/13/98

MATERIAL, GEOMETRIC TOLERANCE AND BREAK EDGE INTERPRETATION PER ANSI Y14.5M-1982 UNLESS OTHERWISE SPECIFIED

RMS MECHANICAL SYSTEM OVERVIEW

SPACE SHUTTLE PRP NO. 14.4

SHEET 1 OF 1

BASIC REV E

BASIC REV E

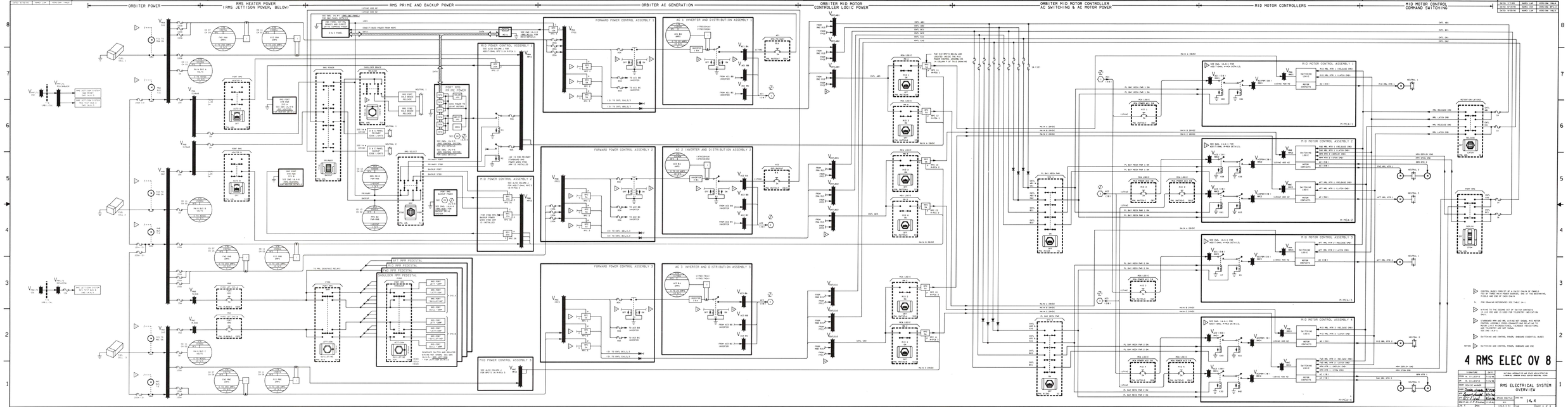
ORBITER POWER
RMS HEATER POWER (RMS JETTISON POWER, BELOW)
RMS PRIME AND BACKUP POWER
ORBITER AC GENERATION
ORBITER MID MOTOR CONTROLLER LOGIC POWER
ORBITER MID MOTOR CONTROLLER AC SWITCHING & AC MOTOR POWER
MID MOTOR CONTROLLERS
MID MOTOR CONTROL COMMAND SWITCHING
FORWARD POWER CONTROL ASSEMBLY 1
FORWARD POWER CONTROL ASSEMBLY 2
FORWARD POWER CONTROL ASSEMBLY 3
AC 1 INVERTER AND DISTRIBUTION ASSEMBLY
AC 2 INVERTER AND DISTRIBUTION ASSEMBLY
AC 3 INVERTER AND DISTRIBUTION ASSEMBLY
MID POWER CONTROL ASSEMBLY 1
MID POWER CONTROL ASSEMBLY 2
MID POWER CONTROL ASSEMBLY 3
MID MOTOR CONTROL ASSEMBLY 1
MID MOTOR CONTROL ASSEMBLY 2
MID MOTOR CONTROL ASSEMBLY 3
MID MOTOR CONTROL ASSEMBLY 4
MID MOTOR CONTROL ASSEMBLY 5
MID MOTOR CONTROL ASSEMBLY 6
RMS JETTISON SYSTEM (SEE RMS/T) RMS TRUSS BUS A (SEE L16,16.1)
RMS JETTISON SYSTEM (SEE RMS/T) RMS TRUSS BUS B (SEE L16,16.1)
RMS PORT MTR PWR (SEE L16,16.1)
RMS STBD MTR PWR (SEE L16,16.1)
RMS PORT BRAKE POWER (SEE L16,16.1)
RMS STBD BRAKE POWER

DATA: 10/30/90	NAME: MAS	VERSION: BFL14
DATA: 10/30/90	NAME: CAR	VERSION: BFL13
DATA: 10/30/90	NAME: BJT	VERSION: HAL4

15. FOR DRAWING REFERENCES SEE TABLE 14-2

THC AND PHC "ATTS CHANGE" COMMUNATE SYSTEM FROM PORS OVERRIDE SPEC 95 INDICATED IN PARENTHESIS (00:00 AND SUBS)

PROCEDURES ARE ONLY INVOKED AS CALLS BY THE CALLING PROCEDURE OR BY ENTRY IN THE PROCEDURE TABLE. NON-CRITICAL PROCEDURES CANNOT BE USED IN EXPRESSIONS

PROGRAMS ARE SCHEDULED AT A PRIORITY PASS, FREQUENCY AND PROPERTY, AND ARE PLACED IN A QUEUE BY THE EXECUTIVE. THE PROGRAMS ARE RUN IN THE ORDER OF THE SCHEDULING TEST-NO AND ARE INTERRUPTED ONLY BY PROGRAMS OF HIGHER PRIORITY

FDIS TRANSACTION ERROR FLAG - IS SET ON EVERY PASS THAT ONE OF THE FOLLOWING READ ERRORS OCCURS
- UNPROPER RESPONSE OR NO RESPONSE WITHIN 810 USEC
- UNPROPER WORD COUNT
- SDI BIT PATTERN LOST IN MESSAGE NOT EQUAL 101
- PARITY ERROR
- UNPROPER MANCHESTER CODE
- EXCESSIVE GAP TIME BETWEEN WORDS
- EXCESSIVE TIME FOR COMPLETE MESSAGE

NUMBERS REFER TO DATA-LIST DES'IN-SPEC (DDS) FUNCTIONS

DISPATCHER TABLE

THE DISPATCHER TABLE CALLS ONLY THOSE FUNCTIONS LISTED FOR EACH MODE FOR ANY ONE CYCLE. FOR EXAMPLE, IF THE SOFTWARE MODE IS "ALIGN" AND THE SUBMODE IS "FINE" AS INDICATED BY FAC, ONLY FCI, FDS AND MHC WOULD BE CALLED BEFORE THE NEXT CYCLE

MODE	ENTRY REQUIREMENTS	FUNCTIONS CALLED	RATE
SUSPEND	1. MCU/GPC I/O IS OFF I/O IS ON FOR ALL OTHER MODES	NA (SOFTWARE DOES NOT EXECUTE AS FAR AS THE DISPATCHER TABLE IN THIS MODE)	NA
TEMPERATURE MAINTENANCE	1. MS ARM SELECTED WITH RMS SELECT SWITCH ARM IS SELECTED FOR NON-ALIGN MODES	TEMPERATURE MONITOR (RTI) DED-STATED DISPLAY (RDD) ENTRY FUNCTION (MAC)	10.5 10.5 10.5
IDLE	1. SOFTWARE STOP ON, OR 2. SAFING IN PROGRESS, OR 3. OMS ARM, OR 4. 1ST SOFTWARE PASS WITH I/O ON, OR 5. 1ST PASS ENTERED THIS PASS # ARM SELECTED LAST PASS, OR 6. MODE SWITCH INDEX THIS PASS # MODE SWITCH INDEX LAST PASS, OR 7. AUTO MODE IS COMMUNICATING AND ENCODER CR 1 ON, OR 8. MODE SELECTED IS OTHER THAN TEST MODE AND HAND CONTROLLERS FAIL I/O ON	KINEMATIC DATA GENERATION (RKG) POSITION HOLD (RPP) SINGLE JOINT CONTROL (RDC) HEALTH MONITOR (RMH) TEMPERATURE MONITOR (RTI) TOTAL VELOCITY (RTV) DED-STATED DISPLAY (RDD) ENCODER FUNCTION (MAC)	10.5 10.5 10.5 10.5 10.5 10.5 10.5
SINGLE	1. THE ARM I/O AT RSTC, AND 2. THE SINGLE DRIVE SWITCH IS NOT IN THE PULL-I OR PUSH-I (-) POSITION	KINEMATIC DATA GENERATION (RKG) HAND CONTROLLER (RJH) SINGLE JOINT CONTROL (RDC) HEALTH MONITOR (RMH) TEMPERATURE MONITOR (RTI) TOTAL VELOCITY (RTV) DED-STATED DISPLAY (RDD) ENCODER FUNCTION (MAC)	10.5 10.5 10.5 10.5 10.5 10.5 10.5
MANUAL/TEST	1. THE ARM I/O AT RSTC, OR 2. IF THE ARM I/O NOT AT REST WHEN SWITCHING FROM ONE MANUAL MODE TO ANOTHER, AND 3. THERE ARE NO INPUT COMMUNICATION FROM HAND CONTROLLERS, AND 4. NO HAND CONTROLLER ERRORS EXISTED AT TIME OF MODE ENTRY	KINEMATIC DATA GENERATION (RKG) HAND CONTROLLER (RJH) MISSION RATE ALGORITHM (RMP) HEALTH MONITOR (RMH) TEMPERATURE MONITOR (RTI) TOTAL VELOCITY (RTV) DED-STATED DISPLAY (RDD) ENCODER FUNCTION (MAC) MULTIPLE EXCLUSIVE MODULES	10.5 10.5 10.5 10.5 10.5 10.5 10.5 10.5
AUTO	1. THE ARM I/O AT RSTC, AND 2. THE AUTO SEQUENCE PROCEED/STOP SWITCH IS IN CONTINUE/ END COMMAND POSITION	KINEMATIC DATA GENERATION (RKG) AUTO SEQUENCE PROCESSOR (RAS) MISSION RATE ALGORITHM (RMP) HEALTH MONITOR (RMH) TEMPERATURE MONITOR (RTI) TOTAL VELOCITY (RTV) DED-STATED DISPLAY (RDD) ENCODER FUNCTION (MAC) MULTIPLE EXCLUSIVE MODULES	10.5 10.5 10.5 10.5 10.5 10.5 10.5 10.5

VERIFY CONSISTENTLY CHECK PARAMETERS ADDED IN 01-00

INHIBIT FOR 01-00 AND SUBSEQUENT FLIGHT SOFTWARE RELEASES

NOTES APPLICABLE FOR 01-00 AND SUBSEQUENT FLIGHT SOFTWARE RELEASES

5 RMS/SOFTWARE 1

SIGNATURE	DATE	NOTHING APPEARS ON ANY SPACE DEVICTATION ON THIS DRAWING OR ANY OTHER SPACE SYSTEM INFORMATION.
ASSOC. TERRY FORSYTHE	10/29/90	
BY: ALAN C. N. BUCKNAM	10/29/90	
APPR:	DATE	RMS/SOFTWARE OVERVIEW
CHKD: C.D. Dale	10/29/90	
CHKD: J.F. Arnold	10/29/90	
APP: R.T. Funk	10/29/90	SPACE SHUTTLE SWS NO. 14.5
PROTECTION LEVEL:		ALL
SIZE: D	SCALE:	SHEET 1 OF 2

BASIC REV E

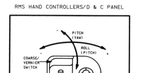

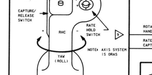

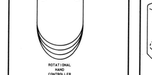





ARM BASED ELECTRONICS (ABE)
SEE DWG 14.4-3

ABE TO MCU/U DATA

THERMISTORS LOCATED ON ARM
SEE DWG 14.4-4

ANALOG TO DIGITAL CONVERTER

ABE
SEE DWG 14.4-3

ENC ELECTRONICS
SEE DWG 14.4-3

MANIPULATOR CONTROLLER INTERFACE UNIT (MCIU)
SEE DWG 14.4-2

MCIU TO GPC DATA

V54U2120J, ENCODER
V54J2101J, TACHOMETER RATE
V54J2112J, CURRENT SATURATION FLAG
V54J2123J, MOTOR TEMP
1?=(-3)(5.2-)(HP,4-)(A,5-)(HP,6-)(HP,7-)(HP)
V54J4203J, EE EXTENDED
V54J4207J, PL CAPTURED
V54J4211J, EE CLOSED
V54J4215J, EE RELEASED/2ED
V54J4219J, EE R-D/2-2ED
V54J4223J, EE STOWED
V54J4227J, SYSTEM SHOULDER BRACE RELEASE FLAG

V54M3402F, BITE STATUS REGISTER (BSR)-1
V54M3403F, BITE STATUS REGISTER (BSR)-2
V54M3404F, BITE STATUS REGISTER (BSR)-3
V54M3405F, BITE STATUS REGISTER (BSR)-4
V54J2302J, SWIES, JPC FAIL
V54J2306J, SSR-1 BITE
V54J2310J, SSR-2 BITE
V54J2702J, TACH FAILURE
V54J2706J, SPA +28V FAILURE
V54J2710J, SPA +28V FAILURE
V54J2714J, SPA COMM FAILURE
1?=(-3)(5.2-)(HP,4-)(A,5-)(HP,6-)(HP,7-)(HP)
V54J3202J, MCIU FAILURE WARNING
V54J3206J, MCIU FAILURE/SHUTDOWN
V54J3302J, ENC IN PROGRESS FLAG
V54J3202A/ BRAKES ON FLAG
V54J3206J
V54J3402J, ABE FAILURE WARNING
V54J3810J, RATE DEMAND +D RETURN
V54J3814J, RATE DEMAND -D RETURN
V54J3818J, TEST HARD ZERO
V54J3202J, ABE FAILURE WARNING
V54J3206J, MCIU FAILURE/SHUTDOWN
V54J3302J, ENC IN PROGRESS FLAG
V54J3202A/ BRAKES ON FLAG
V54J3206J
V54J3402J, ABE FAILURE WARNING
V54J3810J, RATE DEMAND +D RETURN
V54J3814J, RATE DEMAND -D RETURN
V54J3818J, TEST HARD ZERO
V54J4101J, THERMISTOR DATA
V54J4102J, THERMISTOR ID
V54J4103J, THERMISTOR DATA
V54J4104J, THERMISTOR ID
V54J4105J, THERMISTOR DATA
V54J4106J, THERMISTOR ID
V54J4107J, THERMISTOR DATA
V54J4108J, THC - 1 DEFLECTION
V54J4109J, THC - 2 DEFLECTION
V54J4110J, THC - 3 DEFLECTION
V54J4111J, THC - 4 DEFLECTION
V54J4112J, THC - 5 DEFLECTION
V54J4113J, THC - 6 DEFLECTION
V54J4114J, THERMISTOR DATA
V54J4115J, THERMISTOR ID
V54J4116J, THERMISTOR DATA
V54J4117J, THERMISTOR ID
V54J4118J, THERMISTOR DATA
V54J4119J, THERMISTOR ID
V54J4120J, THERMISTOR DATA
V54J4121J, THERMISTOR ID
V54J4122J, THERMISTOR DATA
V54J4123J, THERMISTOR ID
V54J4124J, THERMISTOR DATA
V54J4125J, THERMISTOR ID
V54J4126J, THERMISTOR DATA
V54J4127J, THERMISTOR ID
V54J4128J, THERMISTOR DATA
V54J4129J, THERMISTOR ID
V54J4130J, THERMISTOR DATA
V54J4131J, THERMISTOR ID
V54J4132J, THERMISTOR DATA
V54J4133J, THERMISTOR ID
V54J4134J, THERMISTOR DATA
V54J4135J, THERMISTOR ID
V54J4136J, THERMISTOR DATA
V54J4137J, THERMISTOR ID
V54J4138J, THERMISTOR DATA
V54J4139J, THERMISTOR ID
V54J4140J, THERMISTOR DATA
V54J4141J, THERMISTOR ID
V54J4142J, THERMISTOR DATA
V54J4143J, THERMISTOR ID
V54J4144J, THERMISTOR DATA
V54J4145J, THERMISTOR ID
V54J4146J, THERMISTOR DATA
V54J4147J, THERMISTOR ID
V54J4148J, THERMISTOR DATA
V54J4149J, THERMISTOR ID
V54J4150J, THERMISTOR DATA
V54J4151J, THERMISTOR ID
V54J4152J, THERMISTOR DATA
V54J4153J, THERMISTOR ID
V54J4154J, THERMISTOR DATA
V54J4155J, THERMISTOR ID
V54J4156J, THERMISTOR DATA
V54J4157J, THERMISTOR ID
V54J4158J, THERMISTOR DATA
V54J4159J, THERMISTOR ID
V54J4160J, THERMISTOR DATA
V54J4161J, THERMISTOR ID
V54J4162J, THERMISTOR DATA
V54J4163J, THERMISTOR ID
V54J4164J, THERMISTOR DATA
V54J4165J, THERMISTOR ID
V54J4166J, THERMISTOR DATA
V54J4167J, THERMISTOR ID
V54J4168J, THERMISTOR DATA
V54J4169J, THERMISTOR ID
V54J4170J, THERMISTOR DATA
V54J4171J, THERMISTOR ID
V54J4172J, THERMISTOR DATA
V54J4173J, THERMISTOR ID
V54J4174J, THERMISTOR DATA
V54J4175J, THERMISTOR ID
V54J4176J, THERMISTOR DATA
V54J4177J, THERMISTOR ID
V54J4178J, THERMISTOR DATA
V54J4179J, THERMISTOR ID
V54J4180J, THERMISTOR DATA
V54J4181J, THERMISTOR ID
V54J4182J, THERMISTOR DATA
V54J4183J, THERMISTOR ID
V54J4184J, THERMISTOR DATA
V54J4185J, THERMISTOR ID
V54J4186J, THERMISTOR DATA
V54J4187J, THERMISTOR ID
V54J4188J, THERMISTOR DATA
V54J4189J, THERMISTOR ID
V54J4190J, THERMISTOR DATA
V54J4191J, THERMISTOR ID
V54J4192J, THERMISTOR DATA
V54J4193J, THERMISTOR ID
V54J4194J, THERMISTOR DATA
V54J4195J, THERMISTOR ID
V54J4196J, THERMISTOR DATA
V54J4197J, THERMISTOR ID
V54J4198J, THERMISTOR DATA
V54J4199J, THERMISTOR ID
V54J4200J, THERMISTOR DATA
V54J4201J, THERMISTOR ID
V54J4202J, THERMISTOR DATA
V54J4203J, THERMISTOR ID
V54J4204J, THERMISTOR DATA
V54J4205J, THERMISTOR ID
V54J4206J, THERMISTOR DATA
V54J4207J, THERMISTOR ID
V54J4208J, THERMISTOR DATA
V54J4209J, THERMISTOR ID
V54J4210J, THERMISTOR DATA
V54J4211J, THERMISTOR ID
V54J4212J, THERMISTOR DATA
V54J4213J, THERMISTOR ID
V54J4214J, THERMISTOR DATA
V54J4215J, THERMISTOR ID
V54J4216J, THERMISTOR DATA
V54J4217J, THERMISTOR ID
V54J4218J, THERMISTOR DATA
V54J4219J, THERMISTOR ID
V54J4220J, THERMISTOR DATA
V54J4221J, THERMISTOR ID
V54J4222J, THERMISTOR DATA
V54J4223J, THERMISTOR ID
V54J4224J, THERMISTOR DATA
V54J4225J, THERMISTOR ID
V54J4226J, THERMISTOR DATA
V54J4227J, THERMISTOR ID
V54J4228J, THERMISTOR DATA
V54J4229J, THERMISTOR ID
V54J4230J, THERMISTOR DATA
V54J4231J, THERMISTOR ID
V54J4232J, THERMISTOR DATA
V54J4233J, THERMISTOR ID
V54J4234J, THERMISTOR DATA
V54J4235J, THERMISTOR ID
V54J4236J, THERMISTOR DATA
V54J4237J, THERMISTOR ID
V54J4238J, THERMISTOR DATA
V54J4239J, THERMISTOR ID
V54J4240J, THERMISTOR DATA
V54J4241J, THERMISTOR ID
V54J4242J, THERMISTOR DATA
V54J4243J, THERMISTOR ID
V54J4244J, THERMISTOR DATA
V54J4245J, THERMISTOR ID
V54J4246J, THERMISTOR DATA
V54J4247J, THERMISTOR ID
V54J4248J, THERMISTOR DATA
V54J4249J, THERMISTOR ID
V54J4250J, THERMISTOR DATA
V54J4251J, THERMISTOR ID
V54J4252J, THERMISTOR DATA
V54J4253J, THERMISTOR ID
V54J4254J, THERMISTOR DATA
V54J4255J, THERMISTOR ID
V54J4256J, THERMISTOR DATA
V54J4257J, THERMISTOR ID
V54J4258J, THERMISTOR DATA
V54J4259J, THERMISTOR ID
V54J4260J, THERMISTOR DATA
V54J4261J, THERMISTOR ID
V54J4262J, THERMISTOR DATA
V54J4263J, THERMISTOR ID
V54J4264J, THERMISTOR DATA

V54U2120J, CAPTURE CMD
V54U2128J, RELEASE CMD
V54U2136J, HORIZON CMD
V54U2144J, R-D/2-2ED CMD

MCIU TO GPC DATA

MDA MCIU PERFORMANCE (10-00) AND SUBS ONLY

V54U2184J, MAN TEST ADDRESS 300 TO SPF
V54U2188J, MAN TEST ADDRESS 300 TO SPF
V54U2192J, MAN TEST ADDRESS 300 TO SPF
V54U2196J, MAN TEST ADDRESS 300 TO SPF
V54U3202J, MCIU FAIL, WARNING FAILURE, TOLERANCE
V54U3206J, MCIU FAIL, WARNING FAILURE
V54U3210J, MCIU FAIL, WARNING FAILURE
V54U3214J, MCIU SPF FAILURE
V54U3218J, EE FLAGS STATUS FAILURE
V54U3222J, EXTERNAL FRAME SYNC FAILURE
V54U3226J, EXTERNAL FRAME SYNC FAILURE
V54U3230J, INTERNAL FRAME SYNC FAILURE
V54U3234J, MCIU SPF FAILURE
V54U3238J, SPF ANNUNCIATION
V54U3242J, STANDBARD BRAKE STATUS MON/TEM
V54U3246J, STANDBARD BRAKE STATUS MON/TEM
V54U3254J, SPF BRAKE COMMAND

MCIU FAILURE DETECTION LOGIC
PROCESSES AND/OR GENERATES BIT FLAGS

ANALOG TO DIGITAL CONVERTER

MCIU TO GPC DATA

V54U2120J, CAPTURE CMD
V54U2128J, RELEASE CMD
V54U2136J, HORIZON CMD
V54U2144J, R-D/2-2ED CMD

MDA MCIU PERFORMANCE (10-00) AND SUBS ONLY

V54U2184J, MAN TEST ADDRESS 300 TO SPF
V54U2188J, MAN TEST ADDRESS 300 TO SPF
V54U2192J, MAN TEST ADDRESS 300 TO SPF
V54U2196J, MAN TEST ADDRESS 300 TO SPF
V54U3202J, MCIU FAIL, WARNING FAILURE, TOLERANCE
V54U3206J, MCIU FAIL, WARNING FAILURE
V54U3210J, MCIU FAIL, WARNING FAILURE
V54U3214J, MCIU SPF FAILURE
V54U3218J, EE FLAGS STATUS FAILURE
V54U3222J, EXTERNAL FRAME SYNC FAILURE
V54U3226J, EXTERNAL FRAME SYNC FAILURE
V54U3230J, INTERNAL FRAME SYNC FAILURE
V54U3234J, MCIU SPF FAILURE
V54U3238J, SPF ANNUNCIATION
V54U3242J, STANDBARD BRAKE STATUS MON/TEM
V54U3246J, STANDBARD BRAKE STATUS MON/TEM
V54U3254J, SPF BRAKE COMMAND

MCIU TO GPC DATA

KBD/DEU

KEYBOARD ENTRIES

PORS CONTROL SPEC 094 ITEM ENTRIES

ITEM 1 - POINT ARM SELECTED
ITEM 2 - STBD ARM SELECTED
ITEM 3 - PL ID
ITEM 4 - OMS EYPTSTEM ID
ITEM 5 - MCIU I/O ON
ITEM 6 - MCIU I/O OFF
ITEM 7 - SOFT STOP ENABLE
ITEM 8 - SOFT STOP INHIBIT
ITEM 9 - AUTO BRAKE ENABLE
ITEM 10 - AUTO BRAKE INHIBIT
ITEM 11 - PDS ENCODER CR ENABLE
ITEM 12 - PDS ENCODER CR INHIBIT
ITEM 13 - AUTO MODE SWITCH 1 ID
ITEM 14 - AUTO MODE SWITCH 2 ID
ITEM 15 - AUTO MODE SWITCH 3 ID
ITEM 16 - AUTO MODE SWITCH 4 ID
ITEM 17 - AUTO SEQUENCE START POINT
ITEM 18 - OPERATOR COMMANDED MODE FOR POSITION X
ITEM 19 - OPERATOR COMMANDED MODE FOR POSITION Y
ITEM 20 - OPERATOR COMMANDED MODE FOR POSITION Z
ITEM 21 - OPERATOR COMMANDED MODE FOR ATTITUDE P
ITEM 22 - OPERATOR COMMANDED MODE FOR ATTITUDE Y
ITEM 23 - OPERATOR COMMANDED MODE FOR ATTITUDE R
ITEM 24 - OPERATOR COMMANDED MODE PL INIT ID
ITEM 25 - OPERATOR COMMANDED MODE COMMAND CHECK
ITEM 26 - W-LIFT ROLL RANGE
ITEM 27 - AUTO BRAKE INIT ON

PORS OVERRIDE SPEC 95 ITEM ENTRIES

ITEM 1 - MODE REACTION OVERRIDE
ITEM 2 - OMS/RCS UNLOADED MODE SELECT
ITEM 3 - S-SINGLE MODE SELECT
ITEM 4 - AUX EYPTSTEM MODE SELECT
ITEM 5 - OMS/TDRS LOADED MODE SELECT
ITEM 6 - AUX EYPTSTEM MODE SELECT
ITEM 7 - OPERATOR COMMANDED MODE SELECT
ITEM 8 - AUTO SEQUENCE A MODE SELECT
ITEM 9 - AUTO SEQUENCE B MODE SELECT
ITEM 10 - AUTO SEQUENCE C MODE SELECT
ITEM 11 - AUTO SEQUENCE D MODE SELECT
ITEM 12 - AUTO SEQUENCE E MODE SELECT
ITEM 13 - AUTO SEQUENCE F MODE SELECT
ITEM 14 - LOADED RATES OVERRIDE
ITEM 15 - STRAIGHT RATES OVERRIDE
ITEM 16 - REASS/DIR-LOAD/DIRECT DRIVE SWITCH
ITEM 17 - JOINT SELECTION OVERRIDE
ITEM 18 - SHY JOINT SELECT
ITEM 19 - SWP JOINT SELECT
ITEM 20 - ELP JOINT SELECT
ITEM 21 - WRP JOINT SELECT
ITEM 22 - WRY JOINT SELECT
ITEM 23 - ATT RATE R/R
ITEM 24 - EE TEMPERATURES SELECT
ITEM 25 - ORBIT TEMPERATURES SELECT
ITEM 26 - RATE SWITCH OVERRIDE
ITEM 27 - VERNIER RATES SELECT
ITEM 28 - COARSE RATES SELECT
ITEM 29 - AUTO SEQUENCE PROCEED/STOP SWITCH OVERRIDE
ITEM 30 - AUTO SEQUENCE PROCEED SELECT
ITEM 31 - AUTO SEQUENCE STOP SELECT
ITEM 32 - REASS/DIR-HAND CONTROLLER A/C'S
ITEM 33 - REASS/DIR-HAND CONTROLLER A/C'S
ITEM 34 - REASS/DIR-RMC A/C'S SYSTEM

INPUT_COMMAND (CRB_MCI)
NOTE: THE 7-TYPEWRITE

INPUT_COMMAND (CRB_MCI)
- INPUT BUFFER, CONTAINS BITE AND RHC MCIU INPUT DATA.

MCIU TO GPC DATA

SM 201,202,401 OR 402

RMS SOFTWARE

USER INTERFACE
- ROUTES INPUT COMMANDS FROM THE KEYBOARDS, ORDERS, AND OTHER COMPUTERS.
- PERFORMS INITIATION, SYNCHRONIZATION, AND COMMUNICATION OF GPC APPLICATION AND SYSTEM SOFTWARE.
- CONTROL IS GIVEN TO RMC WHENEVER
  - SPEC 094 IS SELECTED
  - SPEC 094 IS RELEASED
  - Y134 ENTRY/EXECUTE V14
  - MCIU I/O IS TURNED ON
  - NEW SPEC IS SELECTED

SCHEDULES

RMC_SPEC (RMC)
RMS SPECIALIST FUNCTION CONTROL SEQUENCE
- SCHEDULES TIMER INITIATED 1/4
- SCHEDULES NEW ENTRY RM NO.
- PRESENTS PORS CONTROL SPEC (SPEC 094) TO THE CRT
- WAITS FOR SPEC 094 ITEM EXECUTED AND IF MODE=ENA
  - TURNS ON ITEM DATA, ITEM NUMBER AND DEU NUMBER IN WORK-IAC COMMON.
  - TURNS ON ITEM ENTRY FLAG.
  - IF ITEM 1 IS SELECTED, RUN FOR RUD TO PROCESS ITEM NUMBER.
- IF RECURR, NEW RM/I OR NEW SPEC RECEIVED, CLOSES RMS SPECIALIST FUNCTION.

3.5.4.1

SCHEDULES

RMD_SPEC (RMD)
RMS OVERRIDE SPECIALIST FUNCTION CONTROL
- PRESENTS PORS OVERRIDE SPEC 095 ON THE DMS/ITEM ENT AND WAITS FOR A VALID KEYBOARD INPUT.
- CONTROL GIVEN TO RMD WHENEVER SPEC 95 IS ENTERED OR RECURRED.
- WHEN ITEM ENTRY IS RECEIVED, PERFORMS HELP, A NEW SPEC IS SELECTED, OR A NEW SPEC IS RECURRED.
- WHEN ITEM ENTRY IS RECEIVED, PERFORMS KEYBOARD DATA VALIDITY CHECKS AND IF VALID, STORES ITEM DATA IN WORK-IAC COMMON. IF ITEM 1 IS SELECTED, RUN FOR RUD TO PROCESS ITEM NUMBER. IF RECURR, CLOSES RMS SPECIALIST FUNCTION.

3.5.4.24

REX_RMD(EXEC) (REXY)
RMS EXECUTIVE
- CALLS RUD (-RMS ITEM PROCESSOR) IF ITEM ENTRY FLAG SET BY RMS.
- CALLS RMD (-RMS OVERRIDE SPEC) IF ITEM ENTRY FLAG SET BY RMS AND/OR RECURRENCE FLAG SET BY RMD.
- RETURNS CONFIGURATION REQUESTS, IF U/D (3 OF) PFS REQUESTS SUSPEND MODE, CALLS RAY ONCE TO PROCESS INPUT DATA AND RETURN.
- CALLS RKY IF CONFIGURATION REQUEST NOT EQUAL CURRENT CONFIGURATION.
- IF CONFIGURATION REQUEST FROM TABLE TO CALL APPROPRIATE CONTROL LAW MODULES BASED ON CONFIGURATION STATE OF FRESH DATA IN WORK-IAC COMMON AND READ ERRORS DETECTED ON THE DATA.
- INITIATES TEST WORD PATTERNS ALTHAT1 (HEX 5555) AND ALTHAT2 (HEX AAAA) ALLOWED BY ALTHAT "TEST" FOR TWO CYCLES.
- ENABLES WRITING OF 45 WORDS TO MCIU FROM OUTPUT COMMON.

3.5.4.4

CALLS

RUD_KYBD (RUD)
RMS ITEM PROCESSOR
- SETS ARM INIT FLAG = 1 (ITEM 1) OR 2 (ITEM 2), IF ITEM 1 OR 2 IS SELECTED, RESETS ALL ITEMS = 0, AND IF ON THE DISPLAY, RECALLS BLANKED PL AND EE IDs.
- CHECKS THAT PL ID (ITEM 3) ENTERED IS VALID, SETS THE CORRESPONDING PL INDEX AND SETS FOR DISPLAY. IF ENTERED PL ID IS INVALID, BLANKS PL ID ON DISPLAY, RECALLS BLANKED PL AND EE IDs.
- SAFING INITIATE
- TURNS MCIU I/O ON (ITEM 5) OR OFF (ITEM 6).
- TURNS SOFT STOP ENABLE/INHIBIT ON (ITEM 7/8 ENABLE) ITEM 7 OR OFF (INHIBIT) ITEM 8.
- TURNS CONFIG-1 FLAG ON (ITEM 9) OR OFF (ITEM 10).
- TURNS ENCODER CHECK ENA/INH FLAG ON (ENABLE) = 11 OR OFF (INHIBIT) = ITEM 12).
- ASSIGNS AN AUTO SEQUENCE TO THE AUTO SEQUENCE MODE SELECTED (ITEMS 13 THRU 18), ITEM 19 ON A ITEM 19?
- ASSIGNS ITEM DATA TO AUTO SEQ START POINT (ITEM 17) AND AMBLANKS (95 ON 1ST PASS).
- PERFORMS VALIDATION CHECKS ON PDR ATT TAW (ITEM 20) AND ATT TAW (ITEM 21) AND ATT TAW (ITEM 22) DISPLAY WORDS = ITEM DATA AND AMBLANKS THEM.
- CHECKS THAT PTLD UNIT ID (ITEM 24) IS VALID AND STORES IN WORK-IAC COMMON.
- IF ITEM 25 IS SELECTED, CHECKS THAT ALL ITEMS ARE VALID AND IF SO, SETS ITEM 25 = 1.
- IF ANY SELECT MATCHES ARE ALSO SELECTED (ITEM WRIST ROLL RANGE PORT OR STBD AS APPROPRIATE = 1 OR ITEM 26 = 1).
- ALL BRAKES RELEASE FLAG ARE ALL BRAKES RELEASED UP AND TURNED OFF FOR ITEM 27 (AUTO BRAKE INIT ON).
- ENABLES ANNUNCIATION ON MESSAGE LINE FOR ILLEGAL ENTRIES.

3.5.4.2

SCHEDULES

RPO_RPO3 (RPO)
RUN/ALIGN POSITION ALGORITHM
- DETERMINES JOINT ANGLES BY RESOLVING THE DESIRED OPERATOR COMMANDED POS FROM RPO3 AND THE CURRENT POS FROM RPO1 INTO JOINT ANGLES.
- CHECKS IF EACH JOINT ANGLE DETERMINED IS WITHIN ITS SOFTSTOP LIMITS, IF SO TURNS ON FAIL FLAG.
- IF ALL ARE OK, SETS SPM ON FLAG TO INDICATE THAT RPO3 IS TO BE RUN.
- IF FAIL FLAG SET, SETS SPM OFF ON FLAG = 0, SPM ON = 1, SPM OFF = 2, SPM ON = 3, SPM OFF = 4, PL INIT ID, GOOD ARM INIT = ARM INIT FLAG, SPM ON/OFF FLAG, AND ALL GOOD FOR SETS DES-MOD = PDR ATD DES-MOD.

3.5.4.5

RMS CONSTANTS COMPOOL (CRC_COST)
ITEMS UPDATABLE BY THE SPEC

		PORT	STBD
HIGH TEMP LIMITS=	LSD	V54T4705C	V54T4706C
		V54T4707C	V54T4708C
		V54T4709C	V54T4710C
		V54T4711C	V54T4712C
		V54T4713C	V54T4714C
	ABC	V54T4715C	V54T4716C
		V54T4717C	V54T4718C
		V54T4719C	V54T4720C
		V52J2404C	V52J2405C
		NONE	NONE
LOW TEMP LIMITS=	LSD	V54T4604C	V54T4605C
		V54T4606C	V54T4607C
		V54T4608C	V54T4609C
		V54T4610C	V54T4611C
		V54T4612C	V54T4613C
		V54T4614C	V54T4615C
	ABC	V54T4616C	V54T4617C
		V54T4618C	V54T4619C
		V54T4620C	V54T4621C
		V52J2406C	V52J2407C
JOINT BIASES	SAY	V54J4001C	V54J4002C
	SAP	V54J4003C	V54J4004C
	SAR	V54J4005C	V54J4006C
	SAY	V54J4007C	V54J4008C
	ELP	V54J4009C	V54J4010C
	WRP	V54J4011C	V54J4012C
	WRY	V54J4013C	V54J4014C
	WRR	V54J4015C	V54J4016C

ENCODER TICKS/ ERROR LIMIT
POSITION ENCODER 2 COUNT
JOINT TO PT TOLERANCES SAY

SAP	V54J4019C
SAR	V54J4020C
ELP	V54J4021C
WRP	V54J4022C
WRY	V54J4023C
WRR	V54J4024C

DISPATCHER FUNCTIONS

PMP_PRC (PMP)
PROCESS MISSION RATE DETERMINATION
- DETERMINES IF POSITION HOLD SUBMODE ENTRY REQUIREMENTS ARE MET FOR SSJ, SINGLE, AUTO, MANUAL & TEST MODES.
- DETERMINES WHETHER JOINT ANGLES FIRST TIME CONDITIONS ARE MET FOR ENTERING POSITION HOLD.
- SETS FREQUENCY BITS TO INDICATE THE NUMBER OF PASSES BETWEEN CALLS TO PMP.
  - 00-01 POSITION HOLD SUBMODE IN
  - ALL BRAKES ON
  - SOFT STOP ENABLED
  - SOFT STOP RELIM
  - EE IN TRANSITION (LIMPING)
  - TEST MODE

3.5.5.6.20

WORK(IAC DATA COMPOOL (CRA_TE)
MISSION AND PACKAGE INDEPENDENT TEMPORARY STORAGE
ACTIVATED PRN: MEDLIST

PARAMETERS	RELIA	LEVELS
SPC COMM FAIL	NONE	RBM
SPC COMM FAIL	NONE	RBM
PADS FAIL	NONE	RBM

DATE: 12/15/80 NAME: RJT VERS:IBM 1MA.1

RMS SOFTWARE
IDLE, MANUAL, AUTO, SINGLE & TEST MODES

SM 201, 202, 401 OR 402

USER INTERFACE (UI)

- UPDATES PORS CONTROL SPEC 094 AND PORS STATUS DISPLAY 096 AT 1 HZ
- RMS MESSAGE PROCESSOR
- COORDINATION OF GROUND COMMUNICATION BY WAY OF DOMAIN.TXT

MANUAL & TEST MODES ONLY

RJS_HANDCRL (RJS)
GAGE CONTROLLER

- RATE HOLD REQUEST FLAG IS SET TO OPPOSITE STATE WHEN RATE HOLD SWITCH CHANGES STATE AND RESET WHEN PL CAPTURE RATE IS ACHIEVED.
- IF RATE HOLD IS REQUESTED, VERN-ON SCALING FLAG, MAX PL TRANS RATE, MAX PL ACCEL RATE, MAX PL DECEL RATE, AND RATE COMMANDS ARE SAVED UNTIL RATE HOLD MODE IS DESELECTED, AFTER WH HC HOLD FLAG IS RESET, THESE VALUES ARE USED TO RE-INITIALIZE AND RE-ASSIGN BY THE SAVED VALUES OF THIS AND RHC.
- IF ANY RATE COMMANDS ARE COMPUTED AS FOLLOWS:
  - EACH HC AXIS COMMAND IS COMPUTED AS THE PRODUCT OF THE HC DEFLECTION BY THE RATIO OF THE APPROPRIATE PL RATE COMPONENT TO THE MAX HC DEFLECTION, AND THEN SUBTRACTING OFF THE HOLD RESIDUAL.
  - THE VECTOR SUM OF THE ABOVE THC AND RHC COMMANDS IS COMPUTED AND APPROPRIATELY SET PL TRANS RATE AND SEL PL POT RATIO, RESPECTIVELY.
  - IF THE RESULTANT PL TRANS TRANSFORMED TO EE COMMANDS IS=A THE VECTOR FROM THE EE TO THE POR AND THE TRANSFORMATION FROM THE POR TO THE EE IS COMPUTED IN RHG.

3.5.4.4

RVP_CONEN (RVP)
CONSISTENCY AND ENCODER CHECKS

- IF ENCODER ENABLE/DWORD/T FLAG IS ON (ENABLED) THEN PERFORM ENCODER CHECKS AS FOLLOWS:
  - IF RHM FIRST PASS FLAG IS ON OR ENCODER CHECK WAS UNHABITED LAST PASS, THE ENCODER CHECK PARAMETERS ARE RESET.
  - SYSTEM-SEL, 'I' AND ENCODER CHECK FAILURES ON THIS PASS ARE INCREMENTED. IF ANY ENCODER CHECK IS A ENCODER CHECK FAILURE FLAG IS SET ON AND THE FLAG IS RESET BY EITHER CHECK, THE RHM ALARM FLAG AND RHM CHECK OFF FLAG IS TURNED ON.
  - ENCODER CHECK IS PERFORMED BY COMPARING THE INSTANTANEOUS VALUE OF THE ENCODER TO A SLOW SECOND INTEGRAL OF THE TACH OUTPUT AND ANNUNCIATING A FAILURE IF THE TWO DIFFER BY MORE THAN 1 DEG (=M OPS) AFTER=TABLE 1 TO 4 INITIALIZATION.
  - ENCODER CHECK # 2 STUCK ENCODER CHECK: ANNUNCIATES A FAILURE IF THE ENCODER VALUE HAS NOT BEEN SEEN TO CHANGE WHEN MOTOR RATE COMMAND EXCEEDS 1 RAD/S FOR 10 SECONDS (=250 MCU CYCLES). BOTH CONSTANTS ARE SET TO ZERO IN THE SYSTEM DEFINITION FILE.
- THE CONSISTENCY CHECK PARAMETERS ARE RESET IF RHM FIRST PASS FLAG IS ON OR BRAKES ON DMS CHANGED FROM ON TO OFF OR FROM OFF TO ON OR ENCODER CHECK FAILURE OR OTHERWISE IF THE BRAKES ARE OFF AND NO CONSISTENCY CHECK FAILURES EXIST THE CONSISTENCY CHECK ALGORITHMS ARE PERFORMED AS FOLLOWS:
  - FOR EACH JOINT, IF THE TACH FAIL FLAG IS OFF, THE EACH DATA CONSISTENCY CHECK IS PERFORMED.
  - THE CONSISTENCY CHECK IS PERFORMED BY EXPANDING/RATIO/PC FLAG IS OFF (TAK ON=1) OR IF THE MEA FAIL DISCRETE IS ON THEN THE RATE ENVELOPE CHECK IS PERFORMED AS FOLLOWS:
    - IF RHM ALARM FLAG, JOINT ARMOR FLAG, AND RATE CAUTION FLAG IS TURNED ON AND IF AUTO BRAKES ARE ON, THE RATE ENVELOPE ALARM FLAG IS TURNED ON FOR CONSISTENCY FAILURES.
  - JOINT SLIP CHECK DETECTS JOINT MOVEMENT WHILE ALL BRAKES ARE ON, THE JOINT SLIP FLAG IS TURNED ON AND THE ENCODERS FOR THE MONITORED JOINTS HAVE NOT FAILED.

3.5.4.11

RAS_AUTOSEQ (RAS)
AUTOMATIC SEQUENCE PROCESSOR

AUTO MODES ONLY

- ENABLES CONDITIONS ARE MET FOR AUTO SEQUENCE READY INDICATION.
- INTERCEPTS AUTO SEQUENCE PROCESS AND PERFORMS AUTO SEQUENCE INITIALIZATION.
- GENERATES EE PATH COMMANDS FOR USE BY RHP ROUTINES TO DRIVE THE POR FROM POINT TO POINT WITHIN AN AUTO SEQUENCE ALONG A PATH OR TO DRIVE THE EE ALONG A PATH WITH VERN ON (SAMPLE RATE AS APPROPRIATE).
- PERFORMS HANDOFF AT PHASE POINTS ON TRAJECTORIES WHERE VERN ON EQUAL TO BRAKE THE COMMANDED PATH WILL BE SMOOTHLY CHANGED.
- UPDATES LAST PT ON SPEC 94 WHEN A POINT HAS BEEN ACHIEVED.

3.5.4.10

RSC_SINCTL (RSC)
SINGLE MODE CONTROL

SINGLE MODE ONLY

- PERFORMS SINGLE MODE JOINT RATE PROCESSING FOR THE SELECTED JOINT (JOINT SWITCH INDEX 1-6).
- IF THE SELECTED JOINT IN POSITION HOLD IT IS IS NOT IN TRANSITION AND NO ENCODER CHECK EXISTS FOR THE SELECTED JOINT THEN:
  - THE SELECTED JOINT IS CHANGED OR
  - THE SELECTED JOINT IS NOT BEING COMMANDED AND THE JOINT IS AT REST
- COMMANDS THE SELECTED JOINT TO RAMP TO THE SELECTED RATE AT THE SELECTED JOINT RATE LIMIT OVER 10 CYCLES OR 10 CYCLES, RESPECTIVELY.

3.5.4.7

RMS SOFTWARE

NOTE:
SEQUENCE OF CONTROL FLOW IS FROM TOP TO FROM TOP TO BOTTOM ALONG THIS L.INE

RKG_KINDEN (RKG)
KINEMATIC DATA DERIVATION

- COMPUTES ARM GEOMETRY PARAMETERS (JOINT ANGLE SINES AND COSINES) AND DISTANCE COMPUTATIONS FOR USER AND CONTROL.
- DETERMINES ARM TRANSFORMATION MATRICES= FOR TO INVETER STRUCTURAL, FOR TO ARM REFERENCE AND INVETER STRUCTURAL TO ARM REFERENCE FOR USE BY RHG AND RHP.
- COMPUTES FOR POSITION =A INVETER STRUCTURAL FOR AUTO MODE POSITION FEEDBACK USE BY RAS AND COMPUTES FOR POSITION =A INVETER BODY AXES FOR DISPLAY BY RDG.
- COMPUTES FOR ATTITUDE EULER ANGLES IN INVETER ROTATION AXES SYSTEM FOR DISPLAY BY RDG.
- DETERMINES WHEN THE ARM GEOMETRY IS WITHIN EACH OF THE THREE SINGULARITY REGIONS AND SETS OR RESETS THE RESPECTIVE SINGULARITY FLAG FOR USE BY RHM. THE FLAGS WERE INITIALIZED TO OFF IN SUSPEND AND TEMP MODES.
- PERFORMS JOINT ANGLE DISPLAY PROCESSING=A SPEC 94.

3.5.4.5

MANUAL,TEST OR AUTO ONLY

CALLED BY RES

1
2A
14.5-1

NOTE:
RBP IS CALLED IN MANUAL, AUTO & TEST MODES IN PLACE OF RVP ONLY WHEN COMMANDING (I.E., NOT IN POSITION HOLD SUBMODE)

SINGLE ONLY

RBP_POS_HOLD (RBP)
POSITION HOLD

- COMPANDS JOINT RATES NECESSARY TO DRIVE THE ARM TO ITS SNAPSHOT POSITION DURING POSITION HOLD SUBMODE.
- EE ENCODER CHECK FLAG IS ON FOR A PARTICULAR JOINT, THAT JOINT IS NOT COMMANDED.
- SYSTEM-SEL JOINTS ARE DRIVEN AT A RATE PROPORTIONAL TO THE DIFFERENCE BETWEEN THE SNAPSHOT ANGLE AND THE ACTUAL JOINT ANGLE.
- THE RATES DETERMINED ABOVE ARE LIMITED TO THE MAX JOINT RATE LIMITS.

3.5.4.13

RBP_BRATE (RBP)
RESOLVED RATE PROCESSOR

- TAKES EE TRANS RATE CMDS AND EE ROT RATE CMDS FROM RHG DURING AUTO MODES AND COMPUTES JOINT RATE COMMANDS. IN TEST MODES, THE ARM ELSTANCE COMPUTATIONS AND JOINT ANGLE SINES AND COSINES FROM RKG ARE USED TO COMPUTE JOINT RATES NECESSARY TO ACHIEVE THE RESOLVED COORDINATES MOTION OF THE END EFFECTOR.
- IF ANY JOINT IS IN SINGULARITY REGION, SPECIAL TREATMENT:
  - WHEN MEAN THE DAY SINGULARITY, THE ARM JOINT RATES ARE SCALED SO THAT THE COARSE RATE OR ZERO, REPRESENT IN THE COMPUTED VALUE OF N=COMPONENT OF THE JOINT RATE VECTOR WHICH CAUSES THE JOINT RATE ONES ARE COMPUTED NORMALLY.
  - WHEN IN ANY SINGULARITY, THE WRE JOINT RATE ONE IS SET TO ZERO, AND THE OTHER FIVE COMPUTED NORMALLY.
  - IF THE WRE JOINT RATE IS LESS THAN THE JOINT RATE ONE IS SET TO MAX COARSE RATE FOR THAT JOINT RR ZERO.
  - THE MAGNITUDE OF THE RESULTANT VALUE OF THE LINEAR VELOCITY ALONG THE ARM SEGMENT FROM THE ELBOW JOINT TO THE WRE JOINT IS COMPUTED AND IF IT IS BELOW COMPUTED NORMALLY.
- THE SIX COMPUTED JOINT RATE ONES ARE THEN SCALED SO THAT NO COMPANDED EXCEEDS THE JOINT RATE LIMIT MAX COARSE RATE.

3.5.4.11

RTV_TOTVEL (RTV)
TOTAL VELOCITY

- PERFORMS ACTUAL AND COMMANDED POR TRANS RATE AND ROT RATE PROCESSING FOR OUTPUT TO THE RATE METER AND TO DISPLAY ONE.
- ACTUAL RATE PROCESSING USES SIX ACTUAL JOINT RATES AND PERFORMS THE SAME FORWARD KINEMATICS COMPUTATIONS, JOINT ANGLE SINES AND COSINES, AND TRANSFORMATION MATRICES AS COMMANDED RATE PROCESSING. THE ACTUAL POR VELOCITY COMPONENTS IN EITHER PLUS, USING SIX OBAS DEPENDING ON WHICH OF THE THREE SETS OF SIX JOINT TRANS RATE IS ALSO DETERMINED.
- COMMANDED RATE PROCESSING PRODUCES THE COMMANDED POR VELOCITY COMPONENTS IN EITHER PLUS OR BASE COORDINATES AS SELECTED BY AUTO OR TEST MODES. SYSTEM-SEL, THE COMMANDED POR VELOCITY IS ALSO RESOLVED OR RLV (MANUAL OR TEST) AND CONVERTED TO EITHER OBAS, PLUS OR EEOS DEPENDING ON HOW COMMANDED POR TRANS RATE IS COMPUTED.

3.5.4.12

RHM_HLTH MON (RHM)
HEALTH MONITOR

- CALLS RVM.
- IF FIRST PASS FLAG IS ON=1ST ON =1 SUSPEND MODE INITIALIZATION AND WHEN APPROPRIATE TO IDLE FROM TEMP MONITOR MODEC, PERFORMS FIRST PASS INITIALIZATION.
  - ALL REMOVAL, EE RELEASE AND S'INGULARITY CHECKS ARE INITIALIZED.
  - ALL ARE RELATED FAULT COUNTERS ARE ZEROED.
- PERFORMS EE DEPI-010 CHECK AND GENERATES RHM ALARM FLAG, FAULT ARMOR FLAG, EE RELEASE ARMOR FLAG AND EE DEPI-010 ARMOR FLAG FOR FAULT MESSAGE GENERATION AND EE DEPI-010 WARNING FLAG FOR DISPLAY.
- PERFORMS EE RELEASE CHECK AND GENERATES RHM ALARM FLAG, FAULT ARMOR FLAG, EE RELEASE ARMOR FLAG AND EE RELEASE WARNING FLAG.
- IF ENCODER CHECK FLAG IS OFF, PERFORMS READ CHECK AND GENERATES RHM ALARM FLAG, FAULT ARMOR FLAG, READ LIMIT FED ARMOR FLAG (=1=), READ LIMIT MED ARMOR FLAG (=2=) AND READ LIMIT FED WARNING.
- IF SOFT STOP LIMITS ENABLE/DWORD/T FLAG IS ON PERFORMS SOFT STOP CHECK FOR EACH JOINT. IF A JOINT IS OUTSIDE ITS SOFT STOP LIMITS, THE RHM FLAG IS ALSO BEYOND ITS SOFT STOP LIMITS, THEN SOFTWARE STOP FLAG IS TURNED ON AND ZERO JOINT RATE COMMANDS ARE GENERATED.
- IN (=TIME=) VERSUS=TIT CONSISTENCY AND GENERATES RHM ALARM FLAG, FAULT ARMOR FLAG, S'INGULARITY ARMOR FLAG AND S'INGULARITY CAUTION FLAG.
- CALLS RBM TO IN-FILTER AND RELATED HARDWARE FAILURES HARDWARE BITS FLAGS (=6=).

3.5.4.14

TEMP MONITOR MODE

RIT_TEMP (RIT)
TEMPERATURE PROCESSOR

- FOR EACH VALID THERMISTOR (=BASED ON THE HARDWARE FAILURES FLAG) TAKE OF A VALUES EACH PASS) THE FOLLOWING PROCESSING IS PERFORMED:
  - AN UPPER OR LOWER TEMPERATURE LIMIT IS EXCEEDED, RIT ALARM FLAG, RIT WARNING FLAG AND THE RIT ASSOCIATED TEMP FLAG IS TURNED ON IF THE FAILURE EXISTS FOR 134 COUNTS (=1 SEC).
  - THE MARKUP EASE TEMPERATURE DEVIATION FROM THE LIMIT AND (=0 IS ASSOCIATED WITH THE LIMIT EXCEEDED) OR HIGH, AND THE POINT OR STRIP CAUTION FLAG IS TURNED ON IF ANY TEMP DEVIATION IS > ZERO.
- RBM IS CALLED TO IN-FILTER TEMP MORE HARDWARE FAILURES (=HARDWARE BITS FLAGS (=6=).

3.5.4.15

CALLS

RBM_HDWFT (RBM)
HARDWARE FAULT ANNUNCIATION/FILTERING

- EACH OF THE 36 HARDWARE FAULTS (=1, THRU 6 WHEN CALLED BY RIT, T THRU 34 WHEN CALLED BY RVM) IS FILTERED AND ANNUNCIATED AS APPROPRIATE BY SETTING THE FAULT ANNUNCIATION TABLE BIT IN THE FAULT ANNUNCIATION TABLE.
- ON HOME CYCLES BEFORE MESSAGE GENERATION=

MCU HDC	1
MCU CRC	2
MCU CCP	3
DNC COMM FAIL	4
DNC COMM FAIL	5
SPC COMM FAIL	6
ARE COMM FAIL	7
SPA PWR FAIL	8-13
SPA PWR FAIL	14-19
SPA COMM FAIL	20-25
SPA COMM FAIL	26-31
JRT FAIL	32-33
EE FAIL	34

3.5.4.17

CALLS

RVP_CONEN (RVP)
CONSISTENCY AND ENCODER CHECKS

- IF ENCODER ENABLE/DWORD/T FLAG IS ON (ENABLED) THEN PERFORM ENCODER CHECKS AS FOLLOWS:
  - IF RHM FIRST PASS FLAG IS ON OR ENCODER CHECK WAS UNHABITED LAST PASS, THE ENCODER CHECK PARAMETERS ARE RESET.
  - SYSTEM-SEL, 'I' AND ENCODER CHECK FAILURES ON THIS PASS ARE INCREMENTED. IF ANY ENCODER CHECK IS A ENCODER CHECK FAILURE FLAG IS SET ON AND THE FLAG IS RESET BY EITHER CHECK, THE RHM ALARM FLAG AND RHM CHECK OFF FLAG IS TURNED ON.
  - ENCODER CHECK IS PERFORMED BY COMPARING THE INSTANTANEOUS VALUE OF THE ENCODER TO A SLOW SECOND INTEGRAL OF THE TACH OUTPUT AND ANNUNCIATING A FAILURE IF THE TWO DIFFER BY MORE THAN 1 DEG (=M OPS) AFTER=TABLE 1 TO 4 INITIALIZATION.
  - ENCODER CHECK # 2 STUCK ENCODER CHECK: ANNUNCIATES A FAILURE IF THE ENCODER VALUE HAS NOT BEEN SEEN TO CHANGE WHEN MOTOR RATE COMMAND EXCEEDS 1 RAD/S FOR 10 SECONDS (=250 MCU CYCLES). BOTH CONSTANTS ARE SET TO ZERO IN THE SYSTEM DEFINITION FILE.
- THE CONSISTENCY CHECK PARAMETERS ARE RESET IF RHM FIRST PASS FLAG IS ON OR BRAKES ON DMS CHANGED FROM ON TO OFF OR FROM OFF TO ON OR ENCODER CHECK FAILURE OR OTHERWISE IF THE BRAKES ARE OFF AND NO CONSISTENCY CHECK FAILURES EXIST THE CONSISTENCY CHECK ALGORITHMS ARE PERFORMED AS FOLLOWS:
  - FOR EACH JOINT, IF THE TACH FAIL FLAG IS OFF, THE EACH DATA CONSISTENCY CHECK IS PERFORMED.
  - THE CONSISTENCY CHECK IS PERFORMED BY EXPANDING/RATIO/PC FLAG IS OFF (TAK ON=1) OR IF THE MEA FAIL DISCRETE IS ON THEN THE RATE ENVELOPE CHECK IS PERFORMED AS FOLLOWS:
    - IF RHM ALARM FLAG, JOINT ARMOR FLAG, AND RATE CAUTION FLAG IS TURNED ON AND IF AUTO BRAKES ARE ON, THE RATE ENVELOPE ALARM FLAG IS TURNED ON FOR CONSISTENCY FAILURES.
  - JOINT SLIP CHECK DETECTS JOINT MOVEMENT WHILE ALL BRAKES ARE ON, THE JOINT SLIP FLAG IS TURNED ON AND THE ENCODERS FOR THE MONITORED JOINTS HAVE NOT FAILED.

3.5.4.11

RNC_ENCODE (RNC)
MCU ENCODER

- JOINT CURRENT LIMITS ARE DETERMINED FOR EACH JOINT AS THE MIN OF THE JOINT CURRENT LIMIT AND LIMP=AS TO RESOLVED, THE APPROPRIATE LIMIT (14 OR 15) IS USED.
- THE SIX JOINT RATE ONES ARE CONVERTED TO MOTOR RATE COMMANDS BY MULTIPLYING BY THE GEAR RATIOS AND CONVERTING TO RAD/AMS AND THE LAST FOUR VALUES OF EACH ARE SAVED IN A FOUR-LEVEL STACK.
- THE MOST RECENT SET OF MOTOR RATE ONES ARE THEN MULTIPLIED BY THE MOTOR CALIBRATION CONSTANTS (CALIBRATION CURVES, REVERSED IF =A MOTOR) TO AN INTEGER AND LIMITED TO A RANGE OF =2048 TO 2047, AND THE RESULTS IN ONES 1 THRU 6 IS INSERTED FOR CORRECT PHASING.
- THE RATE DEMAND =S IS INCREMENTED MODULO 128 AND THE LATEST FOUR VALUES ARE SAVED IN A FOUR-LEVEL STACK.
- THE SIX MOTOR RATE ONES AND JOINT CURRENT LIMITS ARE RESEQUENCED WITH SHY BEING 6 AND WRE BEING 1 TO MATCH THE ORDER OF TRANSMISSION TO THE MEL.
- THE SIX JOINT CURRENT LIMITS AND THE MAGNITUDE OF THE RESULTANT VELOCITY ARE CONVERTED TO MAG=SHARED INTEGERS (=0 255 TO DRIVE THE RATE METERS).
- FOUR DECIMAL INTEGER DIGITS FOR EACH OF THE THREE DISPLAYS ARE DETERMINED WITH LEADING ZERO SUPPRESSION AND PLACED IN THE DISPLAY DATA FIELD AND THE INPUT DECIMAL FIELD WORDS.
- THE SIX CONSISTENCY CHECK ERRANT FLAGS, THE SIX EE RELEASE FLAGS, THE SIX EE RELEASE WARNING FLAGS, THE EE RELEASE WARNING AND PACKED INTO A SINGLE 16 BIT WORD.
- THE SIX TACH DATA CHECK FAIL AND THE SIX RATE ENVELOPE CHECK FAIL FLAGS ARE PACKED INTO A SINGLE 16 BIT WORD.

3.5.4.18

OUTPUT WRITE COMPOOL (CRE_MCO)
SPC TO MCU DATA

MCU#	PARAMETER NAME	SOURCE
Y12525W.;	MANUAL ORB-TSR UN/LOADED MODE SELECTED	
Y12525W.1	MANUAL ORB LOADED MODE SELECTED	
Y12525W.2	MANUAL ORB UNLOADED MODE SELECTED	
Y12525W.3	MANUAL PL MODE SELECTED	
Y12525W.4	AUTO 1 MODE SELECTED	RJT
Y12525W.5	AUTO 2 MODE SELECTED	
Y12525W.6	AUTO 3 MODE SELECTED	
Y12525W.7	AUTO 4 MODE SELECTED	
Y12525W.8	TEST MODE SELECTED	
Y12525W.9	SINGLE MODE SELECTED	
Y12525X.;	CHECK CRT CAUTION	RDS,RST
Y12525X.1	ALL BRAKES ON DISCRETE	RDS
Y12525X.2	AID SOLE D.ISCRETE	RDS
Y12525X.12	ALL BRAKES REQUEST	RHM
Y12526W.;	AUTO SEQ READY FLAG	
Y12526W.2	AUTO SEQ IN PROGRESS FLAG	RAS,RAS
Y12529W.;	RATE HOLD SELECTED	RDS,RJS
Y12529W.1	RHA RATE FLAG	RDS
Y12529X.;	SOFTWARE STOP FLAG	
Y12529X.1	ENCODER CHECK WARNING FLAG	
Y12529X.2	EE RELEASE WARNING FLAG	RVH,RHM
Y12529X.3	REACH LIMIT CAUTION FLAG	
Y12529X.4	SOFT STOP CAUTION FLAG	
Y12529X.5	CONSTRAINT ERROR CAUTION	RHM,RHT
Y12529Y.;	PORT TEMP CAUTION FLAG	RIT
Y12529Y.1	STBD TEMP CAUTION FLAG	
Y12530W.;	TEST WORD	RCX
Y54K28U.;	RATE DMD US	
Y54K27U.;	WR ROLL RATE DEMAND	
Y54K26U.;	WR PITCH RATE DEMAND	
Y54K25U.;	WR YAW RATE DEMAND	
Y54K24U.;	WR ROLL CURRENT LIMIT	
Y54K23U.;	WR PITCH CURRENT LIMIT	
Y54K22U.;	WR YAW CURRENT LIMIT	
Y54K21U.;	EL ROLL RATE DEMAND	RNC
Y54K20U.;	EL PITCH RATE DEMAND	
Y54K19U.;	EL YAW RATE DEMAND	
Y54K18U.;	SH ROLL RATE DEMAND	
Y54K17U.;	SH PITCH CURRENT LIMIT	
Y54K16U.;	SH YAW RATE DEMAND	
Y54K15U.;	SH YAW CURRENT LIMIT	

MCU#

ARM BASED ELECTRONICS (=ABE)
DWG. 14.5-2

MCU#

RMS DNC PANEL
BRAKES
LIGHT
SOFTWARE STOP
STOP

AUTO 1	DRB LML
AUTO 2	END EFF
AUTO 3	ZERO G
AUTO 4	PARTLOAD
OPR CMD	SINGLE
TEST	DIRECT

MCU#	ENTER/EXIT
ABE	RELEASE
SPC DATA	
S'INGULAR	CHECK CRT
CNTL ERR	REACH LIM
STBD TEMP	PORT TEMP

READY TO PROG
AUTO SEQ

WATCH ALARM

ACT CMD

RATE

FPS

MIN

HOLD

SET

SET

HOLD

88.88

88.88

88.88

XXXX/094 PORS CONTROL XX X DDD/HHH:MM:SS
RMS SELX XXXX RMS PWR XXX DDD/HHH:MM:SS
HOME LX ENA HM
ARM LX SOFT DMP TX RX
J PL TX RX I/O DM TX RX
4 END EFF I OFF RX ENA CM, CTR, CON
AUTO MODES
X Y Z T
13 XX 14 XX LX RX
LX RX
END POS. ENA PT 24 PL INCT LX LR
LR X XXXX Z1 X XXXX ENA CM
LY X XXXX Z2 X XXXX CMD CK ZS XXXX
LZ X XXXX Z3 X XXXX
RMS STOP/DFLT ZK HM RANGE X
DMD X Y Z AUTO BRAKE CK ZTS
RMS LAST/REQ/PERT
ATT X Y Z T
POS X X X X X X
VEL X X X X X X

XXXX/ /096 PORS STATUS XX X DDD/HHH:MM:SS
RMS SELX XXXX
X Y Z Q/R
TRANS RATES ACT XXX.XXX XXX.XXX XXX.XXX
RAT XXX.XXX XXX.XXX XXX.XXX
ROT RATES ACT XXX.XXX XXX.XXX XXX.XXX
RAT XXX.XXX XXX.XXX XXX.XXX
POSITIONS ACT XXXX.XX XXXX.XX XXXX.XX
ATTITUDES ACT XXXX.XX XXXX.XX XXXX.XX
JOINTS SY SP EP WP WY WR MCU#
REACH LIMIT X X X X X X MCU#
ABE = TACH X X X X X X X ABE/MCU#
SPA X X X X X X X
HTR ON X X X X X X X CHECK CRT
HTR FAIL X X X X X X X
CONTROL ERR X X X X X X X END EFF
IN SEQ AREA X X X X X X X TEMP CKT
RAD/MCU#

XXXX/XXX/096 PORS STATUS XX X DDD/HHH:MM:SS
RMS SELX XXXX
X Y Z Q/R
TRANS RATES ACT XXX.XXX XXX.XXX XXX.XXX
RAT XXX.XXX XXX.XXX XXX.XXX
ROT RATES ACT XXX.XXX XXX.XXX XXX.XXX
RAT XXX.XXX XXX.XXX XXX.XXX
POSITIONS CMD XXX.XXX XXX.XXX XXX.XXX
ATTITUDES ACT XXXX.XX XXXX.XX XXXX.XX
JNT ANGLES= SY= XXXX.XX SP= XXXX.XX EP= XXXX.XX
WP= XXXX.XX WY= XXXX.XX WR= XXXX.XX
FAILTN SY SP EP WP WY WR MCU# CHECK CRTS
REACH LIM X X X X X X MCU# X SEPARATE
ABE = TACH X X X X X X MCU# X EXT FX
SPA X X X X X X X ABE X X
HTR ON X X X X X X X SPA X X
CONTROL ERR X X X X X X X HTR X X
SEQAR AREA X X X X X X X TEMP CKT X
RAD/MCU#

XXXX/DRB/XXX PORS OVERM:DE XX X DDD/HHH:MM:SS
RMS SELX XXXX
DRB LML
MODE OVERM:DE LX JOINT SEL OVERM:DE 15% RATE OVERM:DE 25%

MODE	SEL	IND			
DRB LML	25	X	SHY	1RX	VERN:CR 27X
SINGLE	26	X	SHP	1TH	COARSE 28X
DRB LML	27	X	SHR	1TV	
DRB LF	28	X	ARP	2TH	AUTO OVERM:DE 29X
PL	63	X	WRR	2TV	
DRB END	64	X	WRY	2RX	PRECISE 30
AUTO 1	65	X	EE T	3RX	STOP 31
AUTO 2	66	X	CRIT T	3TH	
AUTO 3	67	X		3TV	AXIS CHANGE 32X
AUTO 4	118	X			
TEST	105	X		THC	33X
				RHC	34X
ENTER	15				
LOADED RATES	140				
STORED OPS	150				
S'INGLE/D'IRECT OR MEASU'OR	1XX				15X

4. FOR DRAWING REFERENCES SEE TABLE 14-1

VERN-ON CONSISTENCY CHECK PARAMETERS ADDED IN 01-20

HOLD FOR FOR 01-20 AND SUBSEQUENT FLIGHT SOFTWARE RELEASES

NOTES:

APPLICABLE FOR 01-20 AND SUBSEQUENT FLIGHT SOFTWARE RELEASES ONLY

5 RMS/SW OV 2

SIGNATURE	DATE	NATIONAL AERONAUTICS AND SPACE ADMINISTRATION
DEAN A. BILLINGS	7/26/83	LYNDON B. JOHNSON SPACE CENTER HOUSTON, TEXAS
DR LL. N. BUCHANAN	8/8/83	
CHAR S.L. BELL	8/8/83	RMS/SOFTWARE OVERVIEW
CHAR C.R. Ruth	8/8/83	
CHAR R.T. Jones	8/8/83	
APP R.T. Jones	8/8/83	SPACE SHUTTLE DWG NO 14.5
APP R.T. Jones	8/8/83	
MGR/PLAN R.F. Kimball	8/8/83	SCALE SHEET OF 1
SCR 0 DATE		15.5.1.24 TYPE PART OF 1

BASIC REV E

BASIC REV E

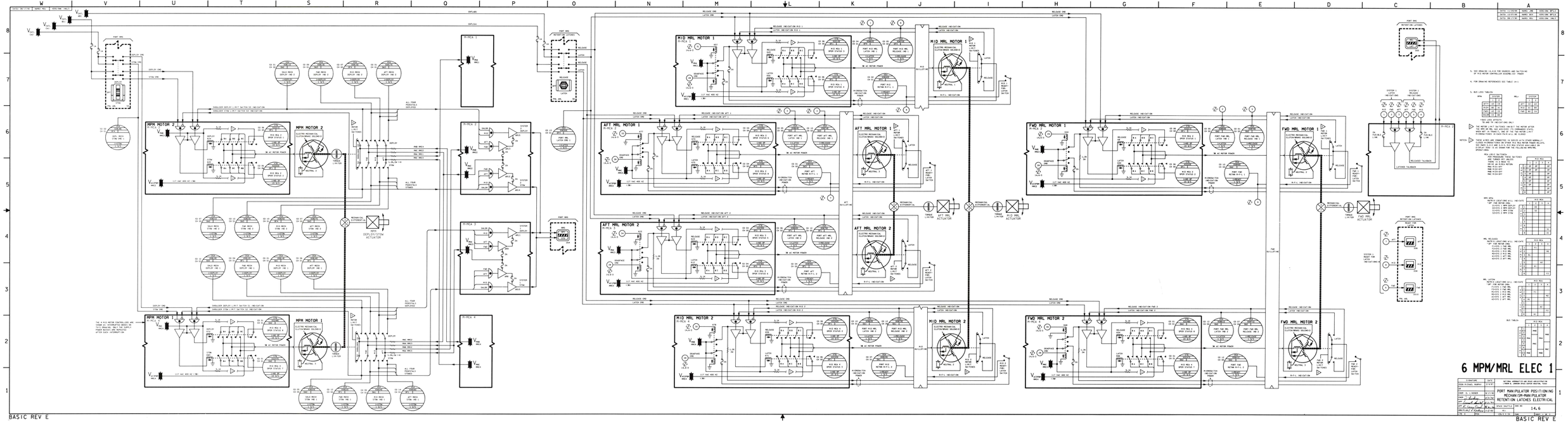

MPM MOTOR 1
MPM MOTOR 2
MID MRL MOTOR 1
MID MRL MOTOR 2
AFT MRL MOTOR 1
AFT MRL MOTOR 2
FWD MRL MOTOR 1
FWD MRL MOTOR 2
DEPLOYSTOW ACTUATOR
AFT MRL ACTUATOR
FWD MRL ACTUATOR
6 MPM/MRL ELEC 1
PORT MANIPULATOR POSITIONING
MECHANISM-MANIPULATOR
RETENTION LATCHES ELECTRICAL
14.6
BASIC REV E

GENERAL MPM OPERATION

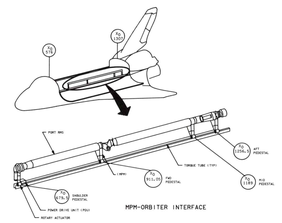

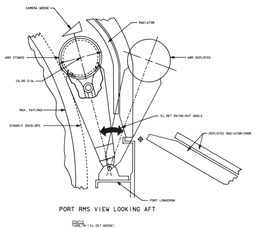

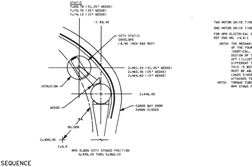

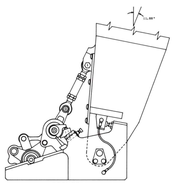

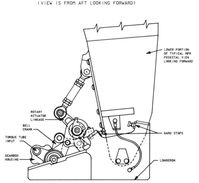

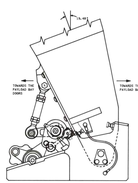

LIMIT SWITCH OPERATION

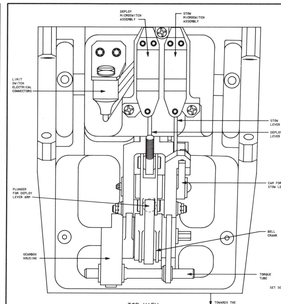

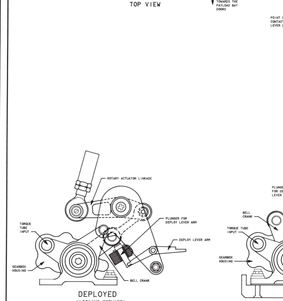

MPM

SHOULDER PEDESTAL DESIGN

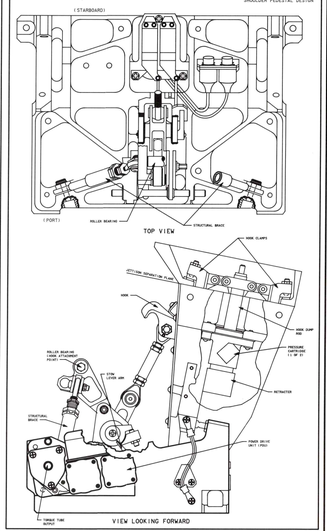

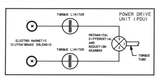

MRL

GENERAL MRL OPERATION

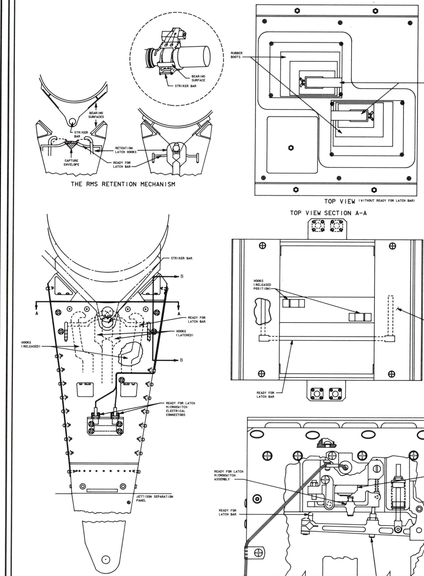

RETENTION LATCH ACTUATION

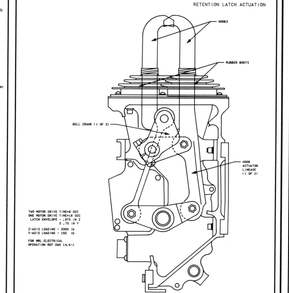

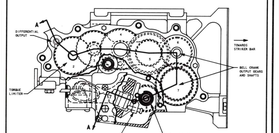

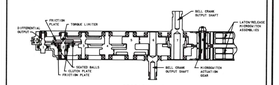

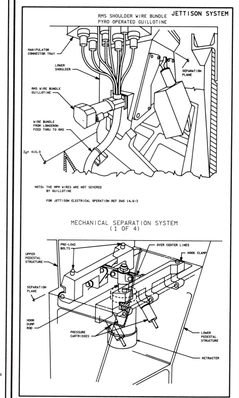

NOTES: 1. REFER TO TABLE I-I FOR DRAWING REFERENCES

6 MPM/MRL MECH 2

SIGNATURE	DATE	NATIONAL AERONAUTICS AND SPACE ADMINISTRATION
ITEM 4 (DCR'S: 2000077)	2/19/93	LYNDON B. JOHNSON SPACE CENTER
DR		PORT MANIPULATOR POSITIONING MECHANISM-MANIPULATOR RETENTION LATCHES MECHANICAL
CHKR Sam Lehman		
APPR Jack Lindsey	4/21/93	
APPR Edward Mango	4/21/93	
APPR Tony Pellegrino	4/21/93	SPEC INSTR'S NA
APPR Jerry Carter	4/21/93	SIZE D
CONTRACT NO.		CODE IDENT NO. 14.6
N/A	NONE	SCALE N/A SHEET 1 OF 1

BASIC REV E

BASIC REV E

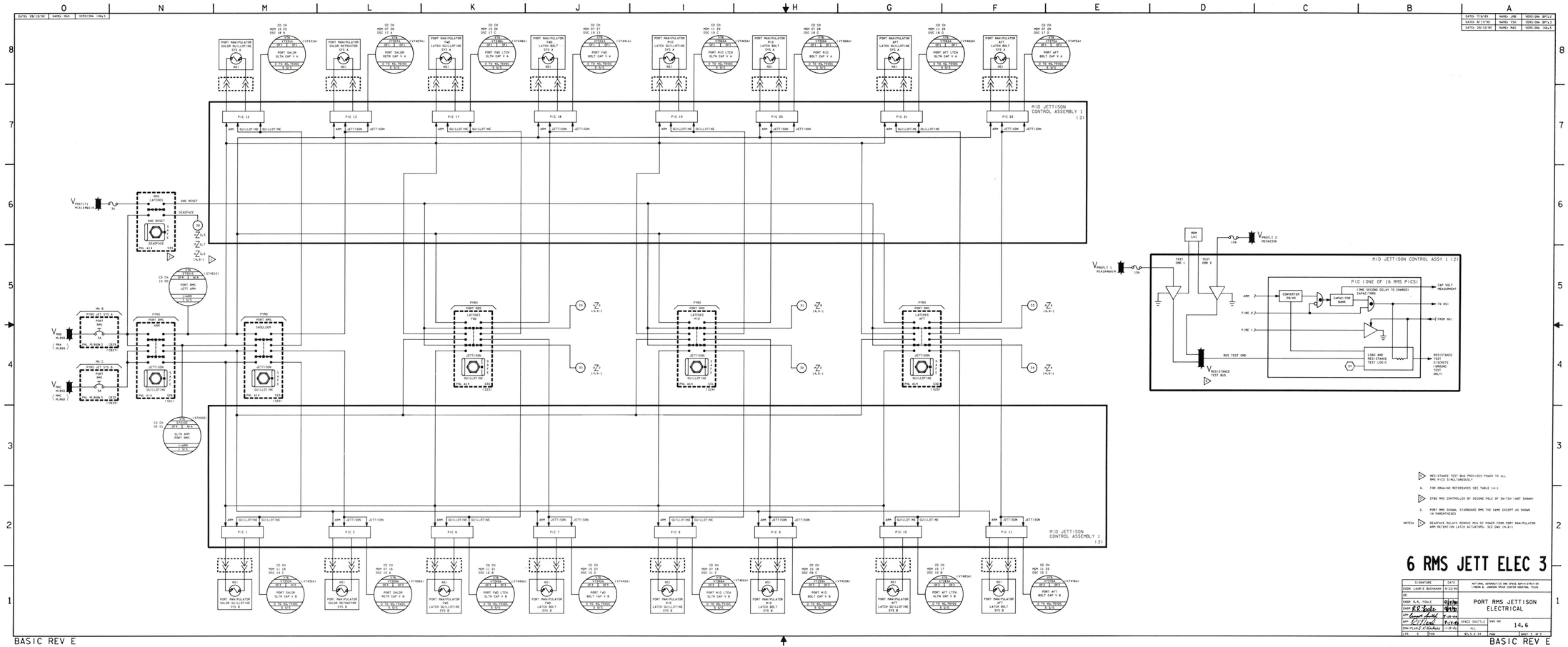

DATE: 09/12/80 NAME: MAG VERSION: 1Mw.5

DATE: 7/6/89 NAME: JMB VERSION: BFTw2
DATE: 8/15/80 NAME: VSH VERSION: BFTw3
DATE: 09/12/80 NAME: MAG VERSION: 1Mw.5

RESISTANCE TEST BUS PROVIDES POWER TO ALL RMS PICS SIMULTANEOUSLY

4. FOR DRAWING REFERENCES SEE TABLE 14-1

STBD RMS CONTROLLED BY SECOND POLE OF SWITCH (NOT SHOWN)

2. PORT RMS SHOWN. STARBOARD RMS THE SAME EXCEPT AS SHOWN IN PARENTHESES

NOTES: DEADFACE RELAYS REMOVE MCA DC POWER FROM PORT MANIPULATOR ARM RETENTION LATCH ACTUATORS. SEE DWG 14.6-1

6 RMS JETT ELEC 3

SIGNATURE	DATE	
DSGN LAURIE BUCHANAN	9/22/80	NATIONAL AERONAUTICS AND SPACE ADMINISTRATION LYNDON B. JOHNSON SPACE CENTER HOUSTON, TEXAS
CK		
DWR R.A. FOALE	9/19/80	PORT RMS JETTISON ELECTRICAL
CHK	9/19/80	
APP	9/19/80	
APP	9/19/80	SPACE SHUTTLE DWG NO 14.6
DPR/PLAN	11/27/80	ALL
CTR	SYM	65.5 X 34 PAGE SHEET 3 OF 3

BASIC REV E

DATE: 08/18/90	NAME: MAS	VERSION: INV.E

DATE: 07/18/89	NAME: MAS	VERSION: INV.C
DATE: 07/20/89	NAME: MAS	VERSION: INV.D
DATE: 08/18/90	NAME: MAS	VERSION: INV.E

FLIGHT RELEASABLE GRAPPLE FIXTURE (FRGF)

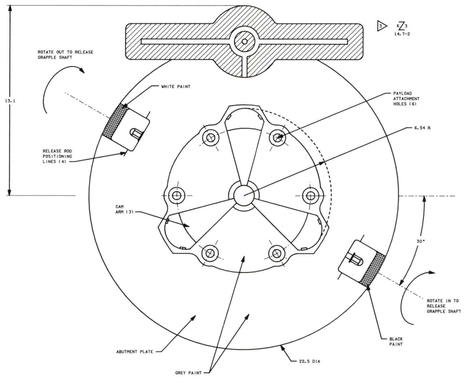

SIDE VIEW (FRGF)

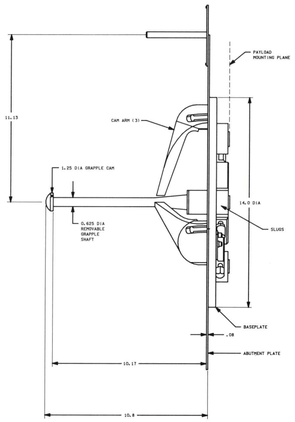

BACK VIEW (FRGF)

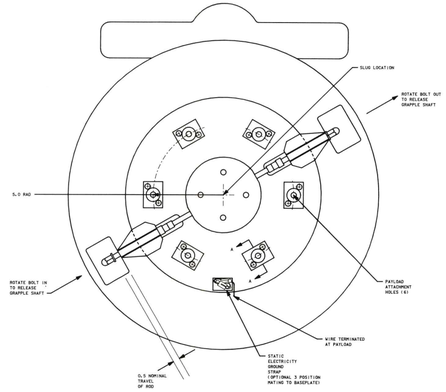

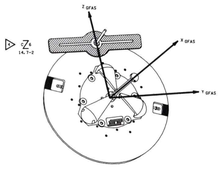

GRAPPLE FIXTURE AXIS SYSTEM (GFAS)

!ALL GRAPPLE FIXTURES USE THE SAME AXIS SYSTEM!

ORIGIN: AT THE BASE OF THE GRAPPLE SHAFT, WHERE IT MEETS THE PAYLOAD

POSITIVE X: IS NOT THE CENTER LINE OF GRAPPLE PIN
POSITIVE Z: IS UP THROUGH THE CENTER OF GRAPPLE TARGET
POSITIVE Y: COMPLETES RIGHT HANDED COORDINATE SYSTEM

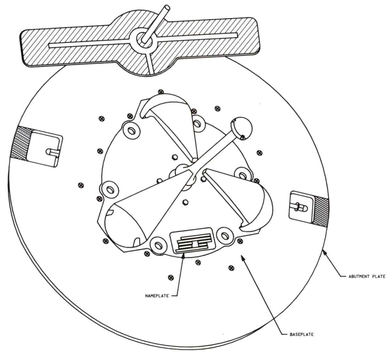

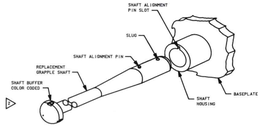

REMOVABLE GRAPPLE SHAFT

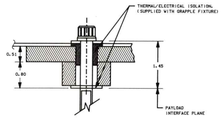

DETAIL A-A

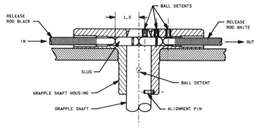

1. SHAFT IN POSITION, UNDER RIGIDIZATION FORCE

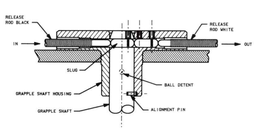

2. SHAFT POISED FOR RELEASE

DETAIL OF SLUG OPERATION

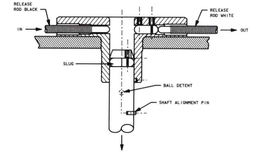

3. SHAFT IS REMOVED

OPERATION OF FRGF EVA RELEASE

1. 1/2" RATCHET WRENCH IS USED
2. A) ROTATE WHITE RELEASE ROD OUT (COUNTERCLOCKWISE) UNTIL IT HITS MECHANICAL HARD STOP (APPROX 0.5") B) ROTATE ROD TO ALIGN WITH RELEASE LINES TO INDICATE LIMIT OF TRAVEL C) 30° TURNS
3. A) ROTATE 0.5" OF TRAVEL
3. A) ROTATE BLACK RELEASE ROD IN (CLOCKWISE) B) THIS POSITIONS THE SLUGS TO RELEASE THE GRAPPLE SHAFT
4. SHAFT IS RELEASED FROM FIXTURE

5. FOR VENDOR REFERENCES, SEE TABLE 14-1

6. REPLACEMENT SHAFT IS INSTALLED IN REVERSE ORDER FROM RELEASE SEQUENCE

7. DURING THE SAME EVA TO RELEASE THE GRAPPLE SHAFT, A CREWMEMBER PUTS A REPLACEMENT GRAPPLE SHAFT BACK INTO THE FIXTURE FOR FUTURE RETRIEVALS. THE REPLACEMENT SHAFT HAS A RED COLOR CODED CAP ON THE SHAFT. REGULAR SHAFTS HAVE A WHITE CAP

8. THE GRAPPLE SHAFT REMAINS STORED IN THE END EFFECTOR (EE) AND A COVER IS PLACED OVER THE EE TO CONTAIN THE SHAFT IN THE EE SHOULD IT JAR LOOSE OF THE SNARES DURING RE-ENTRY

△ BALL DETENT PREVENTS THE SLUG FROM MOVING WHEN IN THE GRAPPLE SHAFT

△ SEE "GFAS" DWG 14.7-2

△ SEE "TARGET ASSEMBLY" (DWG 14.7-21)

△ REPLACEMENT SHAFTS HAVE A RED COLOR CODED CAP ON THE SHAFT. REGULAR SHAFTS HAVE A WHITE CAP

NOTES: 1. DIMENSIONS ARE IN INCHES

7 FRGF 1

SIGNATURE	DATE	NATIONAL AERONAUTICS AND SPACE ADMINISTRATION LYNDON B. JOHNSON SPACE CENTER HOUSTON, TEXAS	
DSGN: L.A. MARTINDALE	1/20/89		
DR: L.A. MARTINDALE	1/20/89	FLIGHT RELEASABLE GRAPPLE FIXTURE	
CHKR: DANIEL GOODWIN	8/17/90		
CHKR: Daniel Goodwin	8/17/90		
APP: Lynn A. Martindale	8/17/90		
APP: R. Terry Valentine	8/17/90	SPACE SHUTTLE	DWG NO: 14.7
DRW/PLAN:		ALL	
SIZE: E	FSCM:	SCALE: 0.5 X 24	SHEET: 1 OF 1

BASIC REV E

DATE= 07/18/89	NAME= SEV	VERSION= INR= 2
DATE= 07/20/89	NAME= SEV	VERSION= INR= 3
DATE= 08/18/90	NAME= MAG	VERSION= INR= 4

RIGIDIZE SENSING GRAPPLE FIXTURE (RSGF)

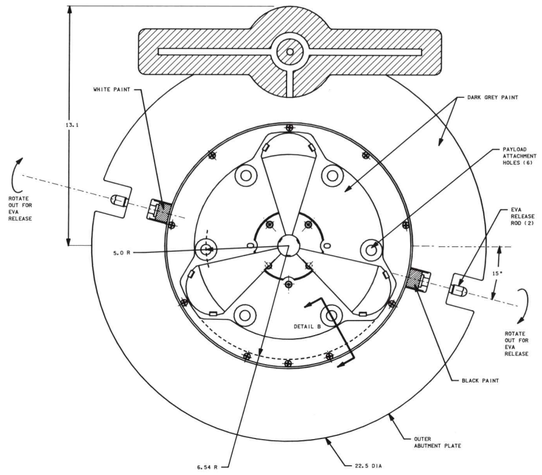

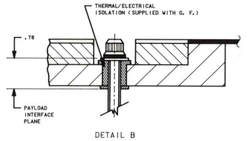

DETAIL B



EVA RELEASE ROD
(SAME ON OPPOSITE SIDE)

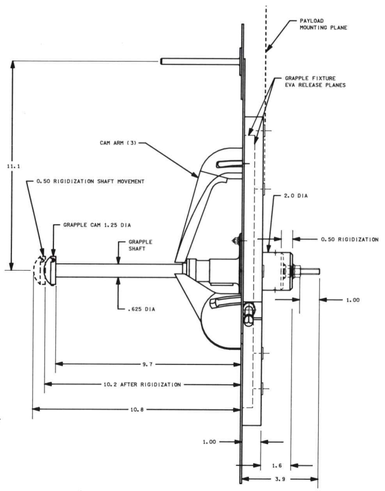

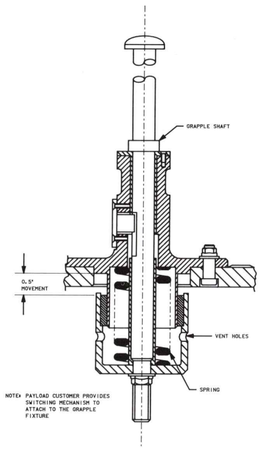

RSGF SPRING MECHANISM

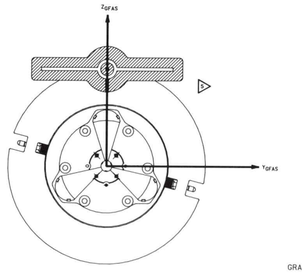

GRAPPLE FIXTURE AXIS SYSTEM (GFAS)

(ALL GRAPPLE FIXTURES USE THE SAME AXIS SYSTEM)

ORIGIN: AT THE BASE OF THE GRAPPLE SHAFT, ON THE ABUTMENT PLATE PLANE

POSITIVE X: IS OUT THE CENTERLINE OF GRAPPLE PIN
POSITIVE Z: IS UP THROUGH CENTER OF GRAPPLE TARGET
POSITIVE Y: COMPLETES RIGHT HANDED COORDINATE SYSTEM

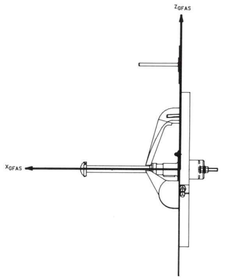

TARGET ASSEMBLY
(FRGF, RSGF, AND EYGF ARE THE SAME)

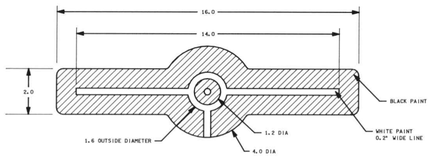

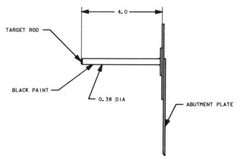

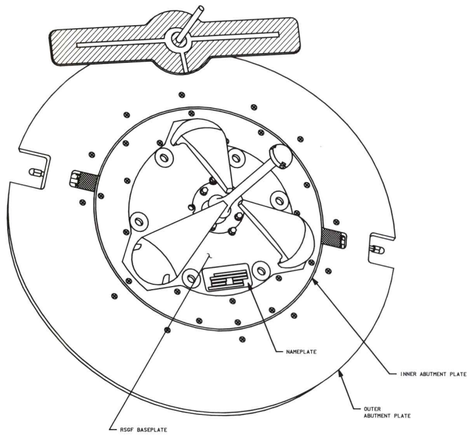

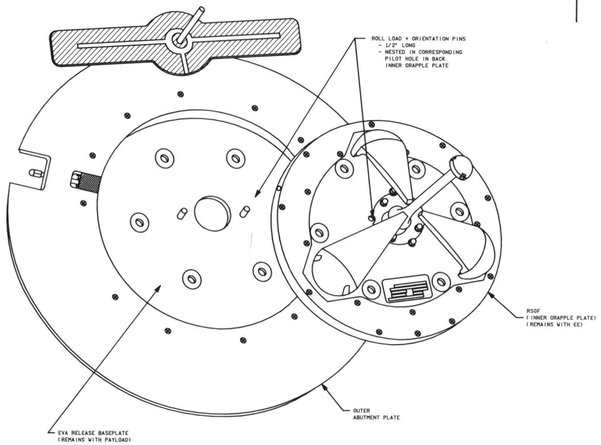

OPERATION OF RSGF EVA RELEASE

1. 1/2" RATCHET WRENCH IS USED
2. ROTATE RELEASE RODS
   WHITE - ROTATE OUT (COUNTERCLOCKWISE)
   BLACK - ROTATE OUT (COUNTERCLOCKWISE)
   THIS CAUSES THE RELEASE RODS TO BACK OUT OF THE INNER GRAPPLE PLATE
3. THE INNER GRAPPLE PLATE WILL BE RELEASED FROM OUTER ABUTMENT PLATE AND REMAINS SHARED IN THE EE

6. FOR VENDOR REFERENCES, SEE TABLE 14-1

▷ SEE ALSO "GFAS" DWG 14.7-1

4. DURING THE RIGIDIZATION PROCESS, THE GRAPPLE SHAFT DOES NOT BEGIN THE 0.5° OF MOVEMENT UNTIL THERE IS A RIGIDIZATION FORCE OF 300 LBF. A PRE-LOADED SPRING PREVENTS MOVEMENT OF THE SHAFT WITH LESS THAN 300 LBF

3. WHEN THE RSGF IS EVA RELEASED THE INNER GRAPPLE PLATE REMAINS WITH THE EE. THE INNER GRAPPLE PLATE BECOMES AN ADDITIONAL PROTRUSION FROM THE END EFFECTER, AND CAN HIT CAMERA B

2. THE BLACK AND WHITE COLOR CODE FOR THE RSGF IS DIFFERENT FROM THE FRGF. BOTH RODS ARE ROTATED OUT

NOTES: 1. DIMENSIONS ARE IN INCHES

7 RSGF 2

SIGNATURE		DATE
DSGN	L.A. MARTINDALE	2/1/89
DR	L.A. MARTINDALE	2/1/89
ENGR	DANIEL GOODWIN	
ENGR	Bernard Goodwin	8/24/90
APP	Lonnie Arnold	8/31/90
APP	C. Lowe Kirk	8/31/90
DMR/PLAN	J.E. Kirby	11-7-90

NATIONAL AERONAUTICS AND SPACE ADMINISTRATION
LYNDON B. JOHNSON SPACE CENTER HOUSTON, TEXAS

RIGIDIZE SENSING GRAPPLE FIXTURE

LTR	E	PCN	SSSH	DWG NO 14.7
			ALL	
			66 X 34	PAGE SHEET 7 OF 8

BASIC REV E

BASIC REV E

INTRODUCTION

THE MCIU FIRMWARE IS A MACHINE-LANGUAGE PROGRAM WHICH IS PERMANENTLY STORED IN PROGRAMMABLE READ-ONLY MEMORY (PROM), AND WHICH RESIDES IN THE MCIU'S MICROCOMPUTER MEMORY BOARD.
THE 8 FIRMWARE IS DESIGNED TO PERFORM CYCLIC PROCESSING ACTIVITIES THE MCIU WILL DECLARE MCIU CYCLE FAIL FOR PATH A OR PATH B IF THE MCIU DOES NOT COMPLETE THE SPC INTERFACE TASK EVERY 80 MCIU SECONDS.
THE MCIU FIRMWARE PERFORMS A POWER-UP TEST SEQUENCE AT MCIU "INITIALIZATION" TIME AND POWER-UP TIME. IF MCIU 8 FIRMWARE DETECTS AN INTERNAL MCIU FAILURE, IT WILL INHIBIT MCIU OUTPUTS TO THE SPC'S. THE MCIU FIRMWARE PERIODICALLY RECHECKS THE MCIU'S HARDWARE CONFIGURATION AND RUNS A PERIODIC MICROPROCESSOR ("MICROPROCESSOR") FIRMWARE CONFIGURATION TEST AND RAM PROGRAM INTEGRITY TEST.

RMS POWERUP SEQUENCE OF EVENTS

- (0) STILL-BUS RMS ACTIVE
  - ■ LAUNCH BUS 1 (LSB1) ASSIGNED TO SM SPC
  - ■ LAUNCH BUS 2 (LSB2) ASSIGNED TO SRM AND SM (SOFTWARE IS ACTIVE-REDUNDANT)
- (1) RMS MAIN POWER IS SELECTED
- ■ RMS I/O POWER TO MCIU (SM PWR)
- ■ MCIU 28 VDC POWER (SM PWR) TURNING BETWEEN MCIU AND SM PANEL
  - THE ELECTRONICS ARE POWERED BEFORE MAIN BUS PWR (~1 MS) BETWEEN THE MCIU AND THE SM'S INDICATE TO NORMAL INITIALIZE STATE
  - THE MCIU'S SOLENOID "LOW" STATE ON THE SM HARDWIRE CAUSES THE "CLEAR" TO BE SET
- ■ MCIU INITIALIZATION FIRMWARE ON "INITIALIZATION MODE (FROM AFTER DISPLAY UP TO POWER
- (2) SM SYSTEMS CONTROLS (~15 MIN FAILURE PROCESSING)
  - ■ WHEN THE SM'S ARE POWERED UP, THE SM'S ENTER THE SPC START PROCESSING WELCOMING MODE (~15 SYSTEMS TIMING)
  - ■ THE SM'S ENTER THE SPC START PROCESSING MODE (~15 SYSTEMS TIMING) (~15 TERMINATED SM'S WHEN THE MCIU IS BYPASSED BY THE SM SPC'S
  - ■ IN RESPONSE TO THE SPC POLLING, THE MCIU SENDS TO THE SPC A BLOCK OF 40 RESPONSE DATA WORDS (FROM SC, A TRANSMISSION IN PROGRESS
  - ■ WHEN THE SPC'S RECEIVE THE MCIU'S BLOCK OF 40 RESPONSE DATA WORDS, BOTH SUCCESSFUL TRANSMISSION OF THE BLOCK OF DATA, AN END OF BLOCK (EOB) INTERRUPT IS ISSUED BY THE MCIU'S SPC INTERFACE BOARD
  - ■ THE EOB INTERRUPT CAUSES THE 7 FIRMWARE TO RUN "EOB-1", WHICH DROPS THE MCIU OUT OF HIGH
  - ■ WHEN FROM 1 TO SIX FULL TIME "SPC WATCHDOG TIMER" BEGINS TO STRAP UP (~15 SYSTEMS)
    - THE WATCHDOG TIMER IS RESET TO A STARTING MCIU CYCLE WHEN 16 MCIU CYCLES HAVE ELAPSED SINCE THE FOLLOWING RECEPTION OF A RESPONSE DATA FRAME FROM THE SPC'S
    - THE WATCHDOG TIMER IS RESET TO A STARTING MCIU CYCLE WHEN THE "1 PPS" 1 SEC RESET IS FIRST SEEN BY A MCIU CYCLE FOLLOWING THE FIRST TRANSMISSION OF DATA TO THE SPC'S SINCE NO DATA BLOCKS HAVE BEEN TRANSMITTED TO THE SPC'S
    - THE TIMER SIGNALS IS MADE "1 PPS BUS"
    - THE MCIU ENTERS SAFING MODE
    - THE MCIU SETS THE "SPC WATCHDOG TIMER" FAILURE FLAG
    - THE MCIU SETS THE "SPC WATCHDOG TIMER" FAILURE FLAG
- (3) EXTERNAL CHOICE ("FOR SL SPEC") ON
  - FOR NEXT COMMUNICATION BETWEEN THE SPC AND THE MCIU, IF THE SPC'S DO NOT RESPOND TO THE MCIU'S DATA REQUEST, MCIU CAUSES THE WATCHDOG TIMER TO BE RESET TO "ZERO"
- ■ MCIU (1) MANUALLY CANCELLED FROM THE SM PANEL
  - ■ THE MCIU'S "MCIU CANCELLED" FLAG IS SET FOR THE SM'S FROM THE "MCIU CANCELLED" FLAG
  - ■ THE MCIU'S "MCIU CANCELLED" FLAG IS SET FOR THE SM'S FROM THE "MCIU CANCELLED" FLAG
- ■ SPC'S (1) SELECTED
  - ■ MCIU (1) SELECTED FROM THE ABE (1 CHANGE FOR 5.05 SECONDS BY A PUSHBUTTON
  - ■ MASTER ALARM AND FAULT MESSAGES CLEARED FOR
    - 1ST MCIU CYCLE
    - (SOON 5 MCIU-MINUTES)

RMS POWER CYCLE SEQUENCE OF EVENTS

- (0) STILL-BUS RMS ACTIVE
  - ■ WHEN THE MCIU LOSES POWER (RMS PRIMARY POWER IS DISCONTINUED), THE MCIU'S MEMORY BECOMES VOLATILE (MCIU'S FOLLOWING PROCESSES THE MCIU)
    - THE MCIU'S MEMORY AND THE MCIU'S I/O SEEN ON THE ORIGINAL
- (1) SM POWER-FAILURE DETECTION (SM PWR)
  - ■ MASTER ALARM LIGHTS (LSB1) TO SYNCHRONOUSLY INCLUDING TIMING
  - ■ MCIU ALARM LIGHTS
- (2) SM SYSTEMS CONTROLS
  - ■ THE MCIU'S "SM SYSTEMS CONTROL BLOCK CALLED PRESS/SELL AND SINCE THE MCIU'S MEMORY IS VOLATILE, THE MCIU'S "SM SYSTEMS CONTROL" BLOCK IS SET TO ALL ARE ASSERTED TO
    - MCIU SIGNALING IN PROM =ADDITIVE=OUT
    - THE MCIU'S "SPC WATCHDOG TIMER" IS RESET TO A STARTING MCIU CYCLE WHEN 16 MCIU CYCLES HAVE ELAPSED SINCE THE MCIU'S "SPC WATCHDOG TIMER" FAILURE FLAG IS SET
- (3) SPC SPC SOFTWARE REPAIRS IN SUSPEND MODE
- (4) SPC'S (1) SELECTED
- ■ SPC'S (1) ARE "SPC'S" COMMAND WORD
  - THE FIRST BLOCK OF DATA SENT BY THE MCIU IS CHANGED SINCE THE MCIU'S "SPC WATCHDOG TIMER" FAILURE FLAG IS SET (SEE STEP 2)
  - THE MCIU'S "SPC WATCHDOG TIMER" FAILURE FLAG IS RESET
  - AND THE MCIU SENDS OUT OF PROM
- (5) SPC'S (1) ARE "SPC'S" COMMAND WORD
  - MCIU'S MCIU'S "SPC WATCHDOG" AS DATA IN THE FIRST FIRST MCIU'S BLOCK AND RETURNED, IT IN THE MCIU'S NEXT TRANSMIT BLOCK TO THE SPC'S
  - THE MCIU'S "SPC WATCHDOG TIMER" FAILURE FOLLOWING THE MCIU SUBSEQUENTLY SET ONE OF BLOCK INTERRUPTS
- ■ MCIU SIGNAL CYCLE ONE, (~15 SYSTEMS) MCIU'S MCIU'S
- (6) SPC'S (1) ARE "SPC'S" COMMAND WORD
- ■ THE MCIU'S "SPC WATCHDOG TIMER" FAILURE FLAG IS RESET
- ■ THE MCIU'S "SPC WATCHDOG TIMER" FAILURE FLAG, AND ENTERS COLD MODE (SPC'S "LOW-POWER-FOR-MODE"), THE "SAFING" FAILURE IS RESET, WARNING/RESET (SAFING) FAILURE WARNING IS SET, AND THE MCIU'S "SPC WATCHDOG TIMER"
- (7) START (1) SELECTED
  - ■ NORMAL, MASTER ALARM AND FAULT MESSAGES CLEARED
  - ■ RMS (SPCS) (1) ARE FROM THE MCIU (1 CHANGE) FOR 5.05 SECONDS

SYNCHRONOUS DATA PROCESSING OPERATING MODES

MODE	DISPLAY/SELF-REVEAL/REMARKS	START/END
INITIALIZATION	■ MCIU INITIALIZATION FIRMWARE ■ MCIU'S MCIU'S "SPC WATCHDOG TIMER" FAILURE FLAG IS SET ■ MCIU'S "SPC WATCHDOG TIMER" FAILURE FLAG IS RESET ■ MCIU EXTERNAL/CHOICE ("SPEC") ■ "SAFING" FAILURE WARNING IS SET	■ MCIU INITIALIZATION SEQUENCE ■ MCIU'S "SPC WATCHDOG TIMER" FAILURE FLAG IS RESET ■ MCIU'S "SPC WATCHDOG TIMER" FAILURE FLAG IS SET ■ "SAFING" FAILURE WARNING IS RESET
START/END	■ "START" MODE ■ MCIU'S "SPC WATCHDOG TIMER" IS RESET ■ SAFING INITIATED FROM "START" MODE ■ AUTOMATIC TIMED TIMES OUT ■ MCIU EXECUTES "START" MODE ■ "SAFING" FAILURE DETECTION WORD ■ SAFING WATCHDOG TIMER TO 16 MCIU CYCLES ■ MCIU'S POWER STATUS BITS ■ "SAFING" FAILURE WARNING BITS ("SAFING" FAILURE WARNING IS SET) ■ "SAFING" FAILURE WARNING IS RESET ■ "SAFING" FAILURE WARNING IS SET

DATE: 09/09/92	NAME: MDU	VERSION: 1.00.4

DATE: 07/30/93	NAME: PAS	VERSION: 1.00.5
DATE: 01/31/97	NAME: JPR	VERSION: 1.00.6
DATE: 09/09/92	NAME: MDU	VERSION: 1.00.4

'SYNCIR' ROUTINE CALL SEQUENCE

ROUTINE	MCIU RAM	ABE UNIT	ABE RCV	ONC UNIT	ONC RCV	MADC RCV
SYNCIR	4					
INMCIU	2					
GPC TRANSMIT						
GPCREDUN	6	0				
ABERR			0			
SPLRDUN	0					
ABERR			1			
PETRDUN	0					
ABERR			2			
SPLRDUN	0					
ABERR			3			
PETRDUN	0					
ABERR			4			
ABERR	1		5			
ABERR	2		6			
ABERR	3		7			
ABERR			8			
ETCRDUN	0			0		0
ABERR			9			
ABERR	0		10			
ABERR	1		11			
ABERR	2		12			
ABERR	3		13			
ABERR			14			
ABERR	4		15			
ABERR	5		16			
ABERR	6		17			
ABERR	7		18			
ABERR			19			
ETCRDUN	1			1		1
ABERR			20			
ABERR	8		21			
ABERR	9		22			
ABERR	10		23			
ABERR	11		24			
ABERR	12		25			
ABERR	13		26			
ABERR	14		27			
ABERR	15		28			
ETCRDUN	2			2		2
ABERR			29			
ABERR	16		30			
ABERR	17		31			
ABERR	18		32			
ABERR	19		33			
ABERR	20		34			
ABERR	21		35			
ABERR	22		36			
ABERR	23		37			
ETCRDUN	3			3		3
ABERR			38			
ABERR	24		39			
ABERR	25		40			
ABERR	26		41			
ABERR	27		42			
ABERR	28		43			
ABERR	29		44			
ABERR	30		45			
ABERR	31		46			
ETCRDUN	4			4		4
ABERR			47			
ABERR	32		48			
ABERR	33		49			
ABERR	34		50			
ABERR	35		51			
ABERR	36		52			
ABERR	37		53			
ABERR	38		54			
ABERR	39		55			
ETCRDUN	5			5		5
ABERR			56			
ABERR	40		57			
ABERR	41		58			
ABERR	42		59			
ABERR	43		60			
ABERR	44		61			
ABERR	45		62			
ABERR	46		63			
ABERR	47		64			
ETCRDUN	6			6		6
ABERR			65			
ABERR	48		66			
ABERR	49		67			
ABERR	50		68			
ABERR	51		69			
ABERR	52		70			
ABERR	53		71			
ABERR	54		72			
ABERR	55		73			
ETCRDUN	7			7		7
ABERR			74			
ABERR	56		75			
ABERR	57		76			
ABERR	58		77			
ABERR	59		78			
ABERR	60		79			
ABERR	61		80			
ABERR	62		81			
ABERR	63		82			
ETCRDUN	8			8		8
ABERR			83			
ABERR	64		84			
ABERR	65		85			
ABERR	66		86			
ABERR	67		87			
ABERR	68		88			
ABERR	69		89			
ABERR	70		90			
ABERR	71		91			
ETCRDUN	9			9		9
ABERR			92			
ABERR	72		93			
ABERR	73		94			
ABERR	74		95			
ABERR	75		96			
ABERR	76		97			
ABERR	77		98			
ABERR	78		99			
ABERR	79		100			
ETCRDUN	10			10		10
ABERR			101			
ABERR	80		102			
ABERR	81		103			
ABERR	82		104			
ABERR	83		105			
ABERR	84		106			
ABERR	85		107			
ABERR	86		108			
ABERR	87		109			
ETCRDUN	11			11		11
ABERR			110			
ABERR	88		111			
ABERR	89		112			
ABERR	90		113			
ABERR	91		114			
ABERR	92		115			
ABERR	93		116			
ABERR	94		117			
ETCRDUN	12			12		12
ABERR			118			
ABERR	95		119			
ABERR	96		120			
ABERR	97		121			
ABERR	98		122			
ABERR	99		123			
ABERR	100		124			
ABERR	101		125			
ABERR	102		126			
ETCRDUN	13			13		13
ABERR			127			
ABERR	103		128			
ABERR	104		129			
ABERR	105		130			
ABERR	106		131			
ABERR	107		132			
ABERR	108		133			
ABERR	109		134			
ABERR	110		135			
ETCRDUN	14			14		14
ABERR			136			
ABERR	111		137			
ABERR	112		138			
ABERR	113		139			
ABERR	114		140			
ABERR	115		141			
ABERR	116		142			
ABERR	117		143			
ABERR	118		144			
ETCRDUN	15			15		15
ABERR			145			
ABERR	119		146			
ABERR	120		147			
ABERR	121		148			
ABERR	122		149			
ABERR	123		150			
ABERR	124		151			
ABERR	125		152			
ABERR	126		153			
ETCRDUN	16			16		16
ABERR			154			
ABERR	127		155			
ABERR	128		156			
ABERR	129		157			
ABERR	130		158			
ABERR	131		159			
ABERR	132		160			
ABERR	133		161			
ETCRDUN	17			17		17
ABERR			162			
ABERR	134		163			
ABERR	135		164			
ABERR	136		165			
ABERR	137		166			
ABERR	138		167			
ABERR	139		168			
ABERR	140		169			
ETCRDUN	18			18		18
ABERR			170			
ABERR	141		171			
ABERR	142		172			
ABERR	143		173			
ABERR	144		174			
ABERR	145		175			
ABERR	146		176			
ABERR	147		177			
ETCRDUN	19			19		19
ABERR			178			
ABERR	148		179			
ABERR	149		180			
ABERR	150		181			
ABERR	151		182			
ABERR	152		183			
ABERR	153		184			
ABERR	154		185			
ETCRDUN	20			20		20
ABERR			186			
ABERR	155		187			
ABERR	156		188			
ABERR	157		189			
ABERR	158		190			
ABERR	159		191			
ABERR	160		192			
ABERR	161		193			
ETCRDUN	21			21		21
ABERR			194			
ABERR	162		195			
ABERR	163		196			
ABERR	164		197			
ABERR	165		198			
ABERR	166		199			
ABERR	167		200			
ABERR	168		201			
ETCRDUN	22			22		22
ABERR			202			
ABERR	169		203			
ABERR	170		204			
ABERR	171		205			
ABERR	172		206			
ABERR	173		207			
ABERR	174		208			
ABERR	175		209			
ETCRDUN	23			23		23
ABERR			210			
ABERR	176		211			
ABERR	177		212			
ABERR	178		213			
ABERR	179		214			
ABERR	180		215			
ABERR	181		216			
ABERR	182		217			
ETCRDUN	24			24		24
ABERR			218			
ABERR	183		219			
ABERR	184		220			
ABERR	185		221			
ABERR	186		222			
ABERR	187		223			
ABERR	188		224			
ABERR	189		225			
ETCRDUN	25			25		25
ABERR			226			
ABERR	190		227			
ABERR	191		228			
ABERR	192		229			
ABERR	193		230			
ABERR	194		231			
ABERR	195		232			
ABERR	196		233			
ETCRDUN	26			26		26
ABERR			234			
ABERR	197		235			
ABERR	198		236			
ABERR	199		237			
ABERR	200		238			
ABERR	201		239			
ABERR	202		240			
ABERR	203		241			
ETCRDUN	27			27		27
ABERR			242			
ABERR	204		243			
ABERR	205		244			
ABERR	206		245			
ABERR	207		246			
ABERR	208		247			
ABERR	209		248			
ABERR	210		249			
ETCRDUN	28			28		28
ABERR			250			
ABERR	211		251			
ABERR	212		252			
ABERR	213		253			
ABERR	214		254			
ABERR	215		255			
ABERR	216		256			
ABERR	217		257			
ETCRDUN	29			29		29
ABERR			258			
ABERR	218		259			
ABERR	219		260			
ABERR	220		261			
ABERR	221		262			
ABERR	222		263			
ABERR	223		264			
ABERR	224		265			
ETCRDUN	30			30		30
ABERR			266			
ABERR	225		267			
ABERR	226		268			
ABERR	227		269			
ABERR	228		270			
ABERR	229		271			
ABERR	230		272			
ABERR	231		273			
ETCRDUN	31			31		31
ABERR			274			
ABERR	232		275			
ABERR	233		276			
ABERR	234		277			
ABERR	235		278			
ABERR	236		279			
ABERR	237		280			
ABERR	238		281			
ETCRDUN	32			32		32
ABERR			282			
ABERR	239		283			
ABERR	240		284			
ABERR	241		285			
ABERR	242		286			
ABERR	243		287			
ABERR	244		288			
ABERR	245		289			
ETCRDUN	33			33		33
ABERR			290			
ABERR	246		291			
ABERR	247		292			
ABERR	248		293			
ABERR	249		294			
ABERR	250		295			
ABERR	251		296			
ABERR	252		297			
ETCRDUN	34			34		34
ABERR			298			
ABERR	253		299			
ABERR	254		300			
ABERR	255		301			
ABERR	256		302			
ABERR	257		303			
ABERR	258		304			
ABERR	259		305			
ETCRDUN	35			35		35
ABERR			306			
ABERR	260		307			
ABERR	261		308			
ABERR	262		309			
ABERR	263		310			
ABERR	264		311			
ABERR	265		312			
ABERR	266		313			
ETCRDUN	36			36		36
ABERR			314			
ABERR	267		315			
ABERR	268		316			
ABERR	269		317			
ABERR	270		318			
ABERR	271		319			
ABERR	272		320			
ABERR	273		321			
ETCRDUN	37			37		37
ABERR			322			
ABERR	274		323			
ABERR	275		324			
ABERR	276		325			
ABERR	277		326			
ABERR	278		327			
ABERR	279		328			
ABERR	280		329			
ETCRDUN	38			38		38
ABERR			330			
ABERR	281		331			
ABERR	282		332			
ABERR	283		333			
ABERR	284		334			
ABERR	285		335			
ABERR	286		336			
ABERR	287		337			
ETCRDUN	39			39		39
ABERR			338			
ABERR	288		339			
ABERR	289		340			
ABERR	290		341			
ABERR	291		342			
ABERR	292		343			
ABERR	293		344			
ABERR	294		345			
ETCRDUN	40			40		40
ABERR			346			
ABERR	295		347			
ABERR	296		348			
ABERR	297		349			
ABERR	298		350			
ABERR	299		351			
ABERR	300		352			
ABERR	301		353			
ETCRDUN	41			41		41
ABERR			354			
ABERR	302		355			
ABERR	303		356			
ABERR	304		357			
ABERR	305		358			
ABERR	306		359			
ABERR	307		360			
ABERR	308		361			
ETCRDUN	42			42		42
ABERR			362			
ABERR	309		363			
ABERR	310		364			
ABERR	311		365			
ABERR	312		366			
ABERR	313		367			
ABERR	314		368			
ABERR	315		369			
ETCRDUN	43			43		43
ABERR			370			
ABERR	316		371			
ABERR	317		372			
ABERR	318		373			
ABERR	319		374			
ABERR	320		375			
ABERR	321		376			
ABERR	322		377			
ETCRDUN	44			44		44
ABERR			378			
ABERR	323		379			
ABERR	324		380			
ABERR	325		381			
ABERR	326		382			
ABERR	327		383			
ABERR	328		384			
ABERR	329		385			
ETCRDUN	45			45		45
ABERR			386			
ABERR	330		387			
ABERR	331		388			
ABERR	332		389			
ABERR	333		390			
ABERR	334		391			
ABERR	335		392			
ABERR	336		393			
ETCRDUN	46			46		46
ABERR			394			
ABERR	337		395			
ABERR	338		396			
ABERR	339		397			
ABERR	340		398			
ABERR	341		399			
ABERR	342		400			
ABERR	343		401			
ETCRDUN	47			47		47
ABERR			402			
ABERR	344		403			
ABERR	345		404			
ABERR	346		405			
ABERR	347		406			
ABERR	348		407			
ABERR	349		408			
ABERR	350		409			
ETCRDUN	48			48		48
ABERR			410			
ABERR	351		411			
ABERR	352		412			
ABERR	353		413			
ABERR	354		414			
ABERR	355		415			
ABERR	356		416			
ABERR	357		417			
ETCRDUN	49			49		49
ABERR			418			
ABERR	358		419			
ABERR	359		420			
ABERR	360		421			
ABERR	361		422			
ABERR	362		423			
ABERR	363		424			
ABERR	364		425			
ETCRDUN	50			50		50
ABERR			426			
ABERR	365		427			
ABERR	366		428			
ABERR	367		429			
ABERR	368		430			
ABERR	369		431			
ABERR	370		432			
ABERR	371		433			
ETCRDUN	51			51		51
ABERR			434			
ABERR	372		435			
ABERR	373		436			
ABERR	374		437			
ABERR	375		438			
ABERR	376		439			
ABERR	377		440			
ABERR	378		441			
ETCRDUN	52			52		52
ABERR			442			
ABERR	379		443			
ABERR	380		444			
ABERR	381		445			
ABERR	382		446			
ABERR	383		447			
ABERR	384		448			
ABERR	385		449			
ETCRDUN	53			53		53
ABERR			450			
ABERR	386		451			
ABERR	387		452			
ABERR	388		453			
ABERR	389		454			
ABERR	390		455			
ABERR	391		456			
ABERR	392		457			
ETCRDUN	54			54		54
ABERR			458			
ABERR	393		459			
ABERR	394		460			
ABERR	395		461			
ABERR	396		462			
ABERR	397		463			
ABERR	398		464			
ABERR	399		465			
ETCRDUN	55			55		55
ABERR			466			
ABERR	400		467			
ABERR	401		468			
ABERR	402		469			
ABERR	403		470			
ABERR	404		471			
ABERR	405		472			
ABERR	406		473			
ETCRDUN	56			56		56
ABERR			474			
ABERR	407		475			
ABERR	408		476			
ABERR	409		477			
ABERR	410		478			
ABERR	411		479			
ABERR	412		480			
ABERR	413		481			
ETCRDUN	57			57		57
ABERR			482			
ABERR	414		483			
ABERR	415		484			
ABERR	416		485			
ABERR	417		486			
ABERR	418		487			
ABERR	419		488			
ABERR	420		489			
ETCRDUN	58			58		58
ABERR			490			
ABERR	421		491			
ABERR	422		492			
ABERR	423		493			
ABERR	424		494			
ABERR	425		495			
ABERR	426		496			
ABERR	427		497			
ETCRDUN	59			59		59
ABERR			498			
ABERR	428		499			
ABERR	429		500			
ABERR	430		501			
ABERR	431		502			
ABERR	432		503			
ABERR	433		504			
ABERR	434		505			
ETCRDUN	60			60		60
ABERR			506			
ABERR	435		507			
ABERR	436		508			
ABERR	437		509			
ABERR	438		510			
ABERR	439		511			
ABERR	440		512			
ABERR	441		513			
ETCRDUN	61			61		61
ABERR			514			
ABERR	442		515			
ABERR	443		516			
ABERR	444		517			
ABERR	445		518			
ABERR	446		519			
ABERR	447		520			
ABERR	448		521			
ETCRDUN	62			62		62
ABERR			522			
ABERR	449		523			
ABERR	450		524			
ABERR	451		525			
ABERR	452		526			
ABERR	453		527			
ABERR	454		528			
ABERR	455		529			
ETCRDUN	63			63		63
ABERR			530			
ABERR	456		531			
ABERR	457		532			
ABERR	458		533			
ABERR	459		534			
ABERR	460		535			
ABERR	461		536			
ABERR	462		537			
ETCRDUN	64			64		64
ABERR			538			
ABERR	463		539			
ABERR	464		540			
ABERR	465		541			
ABERR	466		542			
ABERR	467		543			
ABERR	468		544			
ABERR	469		545			
ETCRDUN	65			65		65
ABERR			546			
ABERR	470		547			
ABERR	471		548			
ABERR	472		549			
ABERR	473		550			
ABERR	474		551			
ABERR	475		552			
ABERR	476		553			
ETCRDUN	66			66		66
ABERR			554			
ABERR	477		555			
ABERR	478		556			
ABERR	479		557			
ABERR	480		558			
ABERR	481		559			
ABERR	482		560			
ABERR	483		561			
ETCRDUN	67			67		67
ABERR			562			
ABERR	484		563			
ABERR	485		564			
ABERR	486		565			
ABERR	487		566			
ABERR	488		567			
ABERR	489		568			
ABERR	490		569			
ETCRDUN	68			68		68
ABERR			570			
ABERR	491		571			
ABERR	492		572			
ABERR	493		573			
ABERR	494		574			
ABERR	495		575			
ABERR	496		576			
ABERR	497		577			
ETCRDUN	69			69		69
ABERR			578			
ABERR	498		579			
ABERR	499		580			
ABERR	500		581			
ABERR	501		582			
ABERR	502		583			
ABERR	503		584			
ABERR	504		585			
ETCRDUN	70			70		70
ABERR			586			
ABERR	505		587			
ABERR	506		588			
ABERR	507		589			
ABERR	508		590			
ABERR	509		591			
ABERR	510		592			
ABERR	511		593			
ETCRDUN	71			71		71
ABERR			594			
ABERR	512		595			
ABERR	513		596			
ABERR	514		597			
ABERR	515		598			
ABERR	516		599			
ABERR	517		600			
ABERR	518		601			
ETCRDUN	72			72		72
ABERR			602			
ABERR	519		603			
ABERR	520		604			
ABERR	521		605			
ABERR	522		606			
ABERR	523		607			
ABERR	524		608			
ABERR	525		609			
ETCRDUN	73			73		73
ABERR			610			
ABERR	526		611			
ABERR	527		612			
ABERR	528		613			
ABERR	529		614			
ABERR	530		615			
ABERR	531		616			
ABERR	532		617			
ETCRDUN	74			74		74
ABERR			618			
ABERR	533		619			
ABERR	534		620			
ABERR	535		621			
ABERR	536		622			
ABERR	537		623			
ABERR	538		624			
ABERR	539		625			
ETCRDUN	75			75		75
ABERR			626			
ABERR	540		627			
ABERR	541		628			
ABERR	542		629			
ABERR	543		630			
ABERR	544		631			
ABERR	545		632			
ABERR	546		633			
ETCRDUN	76			76		76
ABERR			634			
ABERR	547		635			
ABERR	548		636			
ABERR	549		637			
ABERR	550		638			
ABERR	551		639			
ABERR	552		640			
ABERR	553		641			
ETCRDUN	77			77		77
ABERR			642			
ABERR	554		643			
ABERR	555		644			
ABERR	556		645			
ABERR	557		646			
ABERR	558		647			
ABERR	559		648			
ABERR	560		649			
ETCRDUN	78			78		78
ABERR			650			
ABERR	561		651			
ABERR	562		652			
ABERR	563		653			
ABERR	564		654			
ABERR	565		655			
ABERR	566		656			
ABERR	567		657			
ETCRDUN	79			79		79
ABERR			658			
ABERR	568		659			
ABERR	569		660			
ABERR	570		661			
ABERR	571		662			
ABERR	572		663			
ABERR	573		664			
ABERR	574		665			
ETCRDUN	80			80		80
ABERR			666			
ABERR	575		667			
ABERR	576		668			
ABERR	577		669			
ABERR	578		670			
ABERR	579		671			
ABERR	580		672			
ABERR	581		673			
ETCRDUN	81			81		81
ABERR			674			
ABERR	582		675			
ABERR	583		676			
ABERR	584		677			
ABERR	585		678			
ABERR	586		679			
ABERR	587		680			
ABERR	588		681			
ETCRDUN	82			82		82
ABERR			682			
ABERR	589		683			
ABERR	590		684			
ABERR	591		685			
ABERR	592		686			
ABERR	593		687			
ABERR	594		688			
ABERR	595		689			
ETCRDUN	83			83		83
ABERR			690			
ABERR	596		691			
ABERR	597		692			
ABERR	598		693			
ABERR	599		694			
ABERR	600		695			
ABERR	601		696			
ABERR	602		697			
ETCRDUN	84			84		84
ABERR			698			
ABERR	603		699			
ABERR	604		700			
ABERR	605		701			
ABERR	606		702			
ABERR	607		703			
ABERR	608		704			
ABERR	609		705			
ETCRDUN	85			85		85
ABERR			706			
ABERR	610		707			
ABERR	611		708			
ABERR	612		709			
ABERR	613		710			
ABERR	614		711			
ABERR	615		712			
ABERR	616		713			
ETCRDUN	86			86		86
ABERR			714			
ABERR	617		715			
ABERR	618		716			
ABERR	619		717			
ABERR	620		718			
ABERR	621		719			
ABERR	622		720

DATA: 09/06/90 | NAME: MDC | VERSION: ONLY

ROM MEMORY MAP

HEX ADDRESS	ROUTINE NAME	DESCRIPTION
000	POWL	
003	POR	POWER-ON INITIALIZATION
01F	SYNCR	SYNCHRONOUS INTERRUPT
03F	SYNCR	SYNCHRONOUS INTERRUPT
065	POINER	POWER-ON INITIALIZATION MODE
08F	PRER	DISPATCHER
400	PRER	DISPATCH FLAG RECEIVE
40E	ERER	EEE RECEIVE
440	SRER	SYNCHRONOUS (MCIU SATCHG)
471	DRER	DAC RECEIVE
480	PTER	DISPATCH FLAG TRANSMIT
4A0	ETXER	EEE TRANSMIT BYTE
4D2	DTXER	DAC TRANSMIT WORD 5
4E1	STXER	DAC TRANSMIT WORD 4
4F0	ITER	DAC TRANSMIT
4C1	DTXER	DAC TRANSMIT WORD 3
4C3	SPARER	DAC RECEIVE WORD 6 BYTE
4D0	ARER	ABE RECEIVE
500	AXMER	ABE RECEIVE BYTE
513	ATER	ABE TRANSMIT
543	ACCTER	ABE COMMUNICATIONS BYTE
544	ACCWER	ABE COMMUNICATIONS WORD 19
540	CTER	FAILURE DETECTION CIRCUIT TRANSMIT
560	MRER	MAGIC RECEIVE
580	MRBER	MAGIC RECEIVE BYTE
590	TBER	THERMISTOR BYTE
5A0	TWER	THERMISTOR WORD
5D0	ETBER	EE TRANSMIT BYTE
600	BTER	BYTE
610	BTER	BYTE
620	BTER	BYTE
630	BTER	BYTE
802	SPECTRA	SPECTRA TRANSMIT
880	BACKER	BACKGROUND RAM BYTE
890	PARER	PARITY BYTE
900	BACKER	RAM R/W, 1/0 RAM R & T BYTE
903	RNTBER	RAM R/W, 1/0 RAM R & T BYTE
907	SYNTBER	EXIT RAM R & T BYTE
910	BACKER	BACKGROUND ENABLE
920	BACKER	BACKGROUND
930	TBER	RAM BYTE
940	TBER	RAM BYTE
C00	SYNCHR	SYNCHRONOUS INTERRUPT CONT'DO
C40	SYNCHR	(WITH LSI RAM CHECK (1ST SYNCHR FRAME)
C80	RAMCK	RAM ADDRESS CHECK
C90	RAMCK	RAM ADDRESS CHECK
CA0	RAMCK	RAM ADDRESS CHECK
CD0	RAMCK1	RAM ADDRESS CHECK (FINAL)
D80	RAMDRV	RAM BYTE
E00	PSTAB	DISPATCH TABLE
F80	DST40	SOURCE SELECT TABLE (PAGE 6)
F80	DST7	DEVICE SELECT TABLE (PAGE 7)
F00	ESTAB	END EFFECTOR STATUS TABLE
FFF		LAST STATEMENT

RAM MEMORY MAP

DECIMAL BYTES	0	128	256	384	512	640	768	896	1024
	PAGE 0	PAGE 1	PAGE 2	PAGE 3	PAGE 4	PAGE 5	PAGE 6	PAGE 7	
	FLAGS, COUNTERS, ADDRESSES (TEMPORARY STORAGE)	SPC RECEIVE	SPC TRANSMIT	SPC RECEIVE	SPC TRANSMIT	NOT USED	DEVICE SELECT TABLE	DEVICE SELECT TABLE (SOURCE SELECTION TABLE)	
		(45 16-BIT WORDS)	(45 16-BIT WORDS)	(45 16-BIT WORDS)	(45 16-BIT WORDS)				
HEX ADDRESS	0	80	100	180	200	280	300	380	400

PAGE 0

HEX ADDRESS	NAME	BYTE	DESCRIPTION
00	STACK		STACK
20	DWD		DAC WORD ADDRESS
21	DWD1		DAC WORD ADDRESS
22	SPT		PROGRAM RECEIVE POINTER
23	SPT		PROGRAM TRANSMIT PAGE POINTER
24	RABSUB		RAM BYTE SUBCOMPUTATION COUNTER
25	SPR		SPARE WORD
26	SPR		PROGRAM RECEIVE PAGE POINTER
27	SDR		SPA RECEIVE PAGE POINTER
28	WDT		WATCHDOG TIMER
29	MDGF		NO OF RAM FAILURES COUNTER
2A	NRWF		NO OF RAM FAILURES COUNTER
2B	RAMTST		RAM TEST PAGE POINTER
2C	APT		RAM TEST PAGE POINTER
2D	ABT		RAM TEST BLOCK POINTER
2E	PSAT		PAGE A OF T
2F	PSBT		PAGE B OF T RAM TEST PAGE POINTER
30	RADMAS		RAM CHECKSUM
31	RADMAS		RAM CHECKSUM ADDRESS POINTER
32	RADMAS		RAM CHECKSUM
33	EESW		END EFFECTOR SW FILTER
34	LLSW		L REGISTER LOWER BYTE
35	LLSW		L REGISTER LOWER BYTE
36	LHUSW		L REGISTER UPPER BYTE
37	THCT		THERMISTOR FAIL COUNTER
38	THCT		THERMISTOR FAIL COUNT
39	THCT		WAIT COUNT
3A	CSW		CODE SAMPLE AND HOLD COUNTER
3B	CSW		CODE SAMPLE AND HOLD COUNTER
3C	CTSL		FAILURE DETECTION WORD LSB
3D	CTSL		FAILURE DETECTION WORD MSB
3E	DTSL		ESTAT/ISE FAIL SW ROLL
3F	DTSM		SPC DATA FAIL, SAT/HG, BRAKES ON
40	DTSM		SPC FAIL WORD MSB
41	DTSM		DAC TEST WORD MSB
42	CBL		M-MICROMPUTER BITE STATUS REGISTER (BSR) LSB
43	CBM		M-MICROMPUTER BITE STATUS REGISTER (BSR) MSB
44	FTL		DISCRETE FLAG TRANSMIT (FSC SLOT)
45	FRL		DISCRETE FLAG RECEIVE LSB (FSC I/P)
46	FRM		DISCRETE FLAG RECEIVE MSB (FSC I/P)
47	RF		RUNG/FAIL FLAGS
48	ARF		ABE RUNG/FAIL FLAGS
49	ARF		ABE RUNG/FAIL FLAGS
4A	ITL		INTERNAL FLAGS LSB
4B	ITM		INTERNAL FLAGS MSB
4C	BSL		B/S STATUS REGISTER LSB
4D	BSM		MSB
4E	BIL		" " " (34 FILTERED) LSB
4F	BIL		" " " (34 FILTERED) LSB
50	BIL		" " " (34 FILTERED) LSB
51	BIM		" " " (34 FILTERED) MSB
52	BIM		" " " (34 FILTERED) MSB
53	BIMM		" " " (34 FILTERED) MSB
54	TRSM		THERMISTOR VALUE (3 FRAMES OLD) MSB
55	TRSL		" IDENTIFIER (3 FRAMES OLD) LSB
56	TRSM		" VALUE (2 FRAMES OLD) MSB
57	TRSL		" IDENTIFIER (2 FRAMES OLD) LSB
58	TRSM		" VALUE (1 FRAME OLD) MSB
59	TRSL		" IDENTIFIER (1 FRAME OLD) LSB
5A	TRSM		" VALUE MSB
5B	TRSL		" IDENTIFIER LSB (THIS/NEXT)
5C	SPR		SPARE
5D	SPR		SPARE
5E	SPR		SPARE
5F	SPR		SPARE
60	SPR		SPARE
61	SPR		SPARE
62	SPR		SPARE
63	SPR		SPARE
64	SPR		SPARE
65	SPR		SPARE
66	SPR		SPARE
67	SPR		SPARE
68	SPR		SPARE
69	SPR		SPARE
6A	SPR		SPARE
6B	SPR		SPARE
6C	SPR		SPARE
6D	SPR		SPARE
6E	SPR		SPARE
6F	SPR		SPARE
70	SPR		SPARE
71	SPR		SPARE
72	SPR		SPARE
73	SPR		SPARE
74	SPR		SPARE
75	SPR		SPARE
76	SPR		SPARE
77	SPR		SPARE
78	SPR		SPARE
79	SPR		SPARE
7A	ABMF		AUTO BRAKES RUNG FLAGS

POWER-ON TABLE (PDTAB)

NOTES:
1. LSB = LEAST SIGNIFICANT BYTE
MSB = MOST SIGNIFICANT BYTE
2. THE POWER-ON TABLE (PDTAB) IS INITIALLY LOADED INTO PAGE 0 DURING 'POIR'

FAILURE DETECTION CIRCUIT

CTDL/*CTER*

BIT	PARAMETER
7	ABE COMM FAILURE
6	CHECK CRT FAILURE
5	MASTER ALARM
4	DAC FAIL DETECT
3	DDR/DIGITIZE CMD
2	R1/D1/D2 CMD
1	CAPTURE CMD
0	CAPTURE CMD

CTDM/*CBM*

BIT	PARAMETER
7	BRAKES ON COMMAND
6	USED FOR CPU ID/T2
5	USED FOR CPU ID/T2
4	USED FOR CPU ID/T2
3	USED FOR CPU ID/T2
2	USED FOR CPU ID/T2
1	USED FOR CPU ID/T2
0	

COMPUTER BITE STATUS REGISTER (CBSR)

CBL

BIT	PARAMETER
7	ROM ADDRESS 000-1FF
6	ROM ADDRESS 200-3FF
5	ROM ADDRESS 400-5FF
4	ROM ADDRESS 600-7FF
3	ROM ADDRESS 800-9FF
2	ROM ADDRESS A00-BFF
1	ROM ADDRESS C00-DFF
0	ROM ADDRESS E00-FFF

CBM

BIT	PARAMETER
7	RAM ADDRESS 000-0FF(P 0,1)
6	RAM ADDRESS 100-1FF(P 2,3)
5	RAM ADDRESS 200-2FF(P 4,5)
4	RAM ADDRESS 300-3FF(P 6,7)
3	NOT USED OTHERS
2	
1	RAM ADDRESS CHECK FAIL
0	COMBINED RAM BIT

DISCRETE INPUTS

DIP

BIT	PARAMETER
7	SPARE
6	SPARE
5	SPARE
4	SPARE
3	SPARE
2	SPARE
1	GPC COMMUNICATION ERROR
0	GPC COMMUNICATION

RUNG/FAIL FLAGS

RF

BIT	PARAMETER
7	EEESU ALARM RUNG
6	EEESU ALARM RUNG
5	SPC ALARM RUNG
4	GPC FA FLURE MODE
3	THERMISTOR ALARM FLAG
2	THERMISTOR ALARM RUNG
1	THERMISTOR BA FAIL FLAG
0	

INTERNAL FLAGS

ITL

BIT	PARAMETER
7	SPC FAIL FLAG
6	GPC FAIL FLAG
5	ARM FW ABE NOT POLR
4	ARM FW ABE POLR
3	ACCEPT ACCU SS
2	TASK RECEIVE DONE
1	TASK TRANSMIT DONE
0	TASK TRANSMIT DONE

END EFFECTOR STATUS

DTSL/*ESTAT*

BIT	PARAMETER
7	NOT USED
6	SHOULDER BRACE RELEASED
5	EE FULLY CLOSED
4	EE FULLY OPEN
3	EE CAPTURED
2	PAYLOAD CAPTURED
1	EE EXTENDED
0	

DTSM

BIT	PARAMETER
7	ALL BRAKES ON
6	SPARE
5	SPC DATA FAIL WARNING
4	
3	
2	3 SNC ADDRESS FIELD
1	
0	

DISCRETE OUTPUTS

FTL

BIT	PARAMETER
7	THERMISTOR RESET
6	SPARE
5	SPARE
4	SPARE
3	POWER STATUS BIT
2	SPARE
1	SPARE
0	RUN/TIP RESET

DISCRETE INPUTS

FSL

BIT	PARAMETER
7	ALL BRAKES ON
6	SPARE
5	SPARE
4	STANDARD ARM SELECTED
3	ARM ARM SELECTED
2	SNC ARTIFY FAILURE
1	FAILURE DETECTION
0	FAILURE WARNING RESET

ABE RUNG/FAIL FLAGS

ARF

BIT	PARAMETER
7	ABE/BRAKE CONTROL FAIL
6	SPA COMPUTATION FAIL
5	SPA FAIL POWER FAIL
4	SPA FAIL
3	MDA FAIL
2	SPA TO GPC COMM FAIL
1	TACHOMETER FAIL
0	NOT USED

MCIU RUNG FLAGS

MRF

BIT	PARAMETER
7	/ATTITUDE CONTROL FAIL
6	MCPC OUT OF TOLERANCE
5	MCPC OUT OF TOLERANCE
4	SPARE
3	THERMISTOR CIRCUIT FAIL
2	MCIU/GPC COMM FAIL
1	ENC FAILURE (NOT USED)
0	GPC COMMUNICATION FAIL

B/S STATUS REGISTER (BSR)

BSL

BIT	PARAMETER
7	SPARE
6	SPA COMPUTATION FAIL
5	SPA FAIL POWER FAIL
4	SPA FAIL
3	MDA FAIL
2	SPA TO GPC COMM FAIL
1	TACHOMETER FAIL
0	EHE EFFECTOR FAIL

BSM

BIT	PARAMETER
7	/INTERFACE CONTROL FAIL
6	MCPC OUT OF TOLERANCE
5	MCPC OUT OF TOLERANCE
4	SPARE
3	THERMISTOR CIRCUIT FAIL
2	MCIU/GPC COMM FAIL
1	ENC FAILURE (NOT USED)
0	GPC COMMUNICATION FAIL

PAGES 1 & 3 (GPC TO MCIU)

ITEM	DEST	DESCRIPTION	FW ADDRESS (EX)	MCIU
1		SPARE	RSL,W	
2		SPARE	RSL,W	
3		SPARE	RSL,W	
4		SPARE	RSL,W	
5	ABE	RATE/ATT SONAND	RSL,W ATSL,W	V54R355P
6	ABE	WRM CURRENT LIMIT + RATE DMD ID	RSL,W ATSL,W	V54R356P
7	ABE	WRM CURRENT LIMIT	RSL,W ATSL,W	V54R357P
8	ABE	ELP SURFACE LIMITS	RSL,W ATSL,W	V54R358P
9	ABE	SPA RATE DEMAND	RSL,W ATSL,W	V54R359J
10	ABE	SPA RATE LIMITS	RSL,W ATSL,W	V54R35AJ
11 (18)	ABE	ELP RATE FAILURES	RSL,W ATSL,W	V54R35BJ
12	ABE	ELP CURRENT LIMIT	RSL,W ATSL,W	V54R35CJ
13	ABE	ELP SURFACE LIMITS	RSL,W ATSL,W	V54R35DJ
14	ABE	RAP CURRENT LIMITS	RSL,W ATSL,W	V54R35EJ
15	ABE	SPA RATE DEMAND	RSL,W ATSL,W	V54R35FJ
16	ABE	RAP CURRENT LIMITS	RSL,W ATSL,W	V54R35GJ
17		SPARE	RSL,W	
18		SPARE	RSL,W	
19		SPARE	RSL,W	
20		SPARE	RSL,W	
21		SPARE	RSL,W	
22		SPARE	RSL,W	
23		SPARE	RSL,W	
24		SPARE	RSL,W	
25		SPARE	RSL,W	
26		SPARE	RSL,W	
27		SPARE	RSL,W	
28	DNC	ADDRESS FIELD, DATA FIELD	RSL,W STSL,W	
29	DNC	ADDRESS FIELD, DATA FIELD	RSL,W STSL,W	
30	DNC	ADDRESS FIELD, DATA FIELD	RSL,W STSL,W	
31	DNC	ADDRESS FIELD, SPARE	RSL,W STSL,W	
32	DNC	ADDRESS FIELD, DATA FIELD	RSL,W STSL,W	
33	DNC	ADDRESS FIELD, DATA FIELD	RSL,W STSL,W	
34	DNC	ADDRESS FIELD, MUX WORD 1	RSL,W STSL,W	
35 (19)	DNC	ADDRESS FIELD, MUX WORD 2	RSL,W STSL,W	
36	DNC	ADDRESS FIELD, MUX WORD 3	RSL,W STSL,W	
37	DNC	ADDRESS FIELD, MUX WORD 4	RSL,W STSL,W	
38	DNC	ADDRESS FIELD, MUX WORD 5	RSL,W STSL,W	
39	DNC	ADDRESS FIELD, MUX WORD 6	RSL,W STSL,W	
40	DNC	ADDRESS FIELD, MUX WORD 7	RSL,W STSL,W	
41	DNC	ADDRESS FIELD, MUX WORD 8	RSL,W STSL,W	
42	DNC	ADDRESS FIELD, MUX WORD 9	RSL,W STSL,W	
43	DNC	ADDRESS FIELD, MUX WORD 10	RSL,W STSL,W	
44		SPARE	RSL,W	
45	DNC	ADDRESS FIELD, MUX WORD 11	RSL,W STSL,W	
46		SPARE	RSL,W	
47		SPARE	RSL,W	
48		SPARE	RSL,W	
49		SPARE	RSL,W	
50		SPARE	RSL,W	
51		SPARE	RSL,W	
52		SPARE	RSL,W	
53		SPARE	RSL,W	
54		SPARE	RSL,W	
55		SPARE	RSL,W	
56		SPARE	RSL,W	
57		SPARE	RSL,W	
58		SPARE	RSL,W	
59		SPARE	RSL,W	
60		SPARE	RSL,W	
61		SPARE	RSL,W	
62		SPARE	RSL,W	
63		SPARE	RSL,W	
64		SPARE	RSL,W	
65		SPARE	RSL,W	
66		SPARE	RSL,W	
67		SPARE	RSL,W	
68		SPARE	RSL,W	
69		SPARE	RSL,W	
6A		SPARE	RSL,W	
6B		SPARE	RSL,W	
6C		SPARE	RSL,W	
6D		SPARE	RSL,W	
6E		SPARE	RSL,W	
6F		SPARE	RSL,W	
70		SPARE	RSL,W	
71		SPARE	RSL,W	
72		SPARE	RSL,W	
73		SPARE	RSL,W	
74		SPARE	RSL,W	
75		SPARE	RSL,W	
76		SPARE	RSL,W	
77		SPARE	RSL,W	
78		SPARE	RSL,W	
79		SPARE	RSL,W	
7A		SPARE	RSL,W	
7B		SPARE	RSL,W	
7C		SPARE	RSL,W	
7D		SPARE	RSL,W	
7E		SPARE	RSL,W	
7F		SPARE	RSL,W	

NOTES:
1. INC ADDRESS FIELD (BITS 4-0 OF MSB) (ADDITIED BY FIRMWARE
2. (') WORDS TRANSMITTED TO SNC W/IN WORDS 'ESTF' AND 'STF' READ FROM PAGE 0

ABE TRANSMIT WORDS

RWL/*ATOL*

BIT	PARAMETER
7	SPARES
6	
5	
4	WR ROLL
3	RATE COMMAND
2	
1	
0	SIGN BIT

RSL/*ATIL*

BIT	PARAMETER
7	SPARE
6	
5	
4	RATE DEMAND
3	IDENTIFIER
2	
1	
0	

RTL/*ATSL*

BIT	PARAMETER
7	
6	SPARES
5	
4	
3	
2	
1	
0	

RWM/*ATOM*

BIT	PARAMETER
7	
6	WR ROLL
5	RATE COMMAND
4	
3	CURRENT LIMIT
2	1/4 BIT BINARY)
1	
0	

RSM/*ATIM*

BIT	PARAMETER
7	
6	SPARES
5	
4	
3	WR ROLL
2	CURRENT LIMIT
1	1/4 BIT BINARY)
0	

RTM/*ATSM*

BIT	PARAMETER
7	
6	SPARES
5	
4	
3	WR TAK
2	CURRENT LIMIT
1	1/4 BIT BINARY)
0	

SAME FORMAT FOR 'RWP'/'ATOP' (ELP) 'RWY'/'ATOY' (RWP) 'RSP'/'ATIP' (ELP) 'RSY'/'ATIY' (RWP) 'RTP'/'ATSP' (ELP) 'RTY'/'ATSY' (RWP)

SAME FORMAT FOR 'RSP'/'ATIP' (ELP) 'RSY'/'ATIY' (RWP) 'RTP'/'ATSP' (ELP) 'RTY'/'ATSY' (RWP)

ENG TRANSMIT WORDS

RDTOL/*DTOL*

BIT	PARAMETER
7	NOT USED
6	AUTO SEQ NO 1 IND
5	OPR ENG IND
4	SYS TEST IND
3	
2	
1	
0	

RDTOM/*DTOM*

BIT	PARAMETER
7	
6	
5	
4	
3	
2	
1	
0	

RDTIL/*DTIL*

BIT	PARAMETER
7	CONTROL ERROR CAUTION
6	CONTROL ERROR CAUTION
5	EE RELEASED WARNING
4	EE DEVICED/DES WARNING
3	EE DEVICED/DES CAUTION
2	SIMULARITY CAUTION
1	SOFTWARE STOP
0	

RDTIM/*DTIM*

BIT	PARAMETER
7	
6	
5	
4	
3	
2	
1	
0	

RDTSL/*DTSL*

BIT	PARAMETER
7	SPARE
6	SPARE
5	SPARE
4	SPARE
3	SPARE
2	SPARE
1	SPARE
0	SPARE

RDTSM/*DTSM*

BIT	PARAMETER
7	
6	
5	
4	
3	
2	
1	
0	

RDTOL/*DTOL*

BIT	PARAMETER
7	PARITY FIELD
6	JOINT SEL - OPT TOW
5	MODE SEL - AUTO 2
4	MODE SEL - AUTO 1
3	MODE SEL - MAN
2	MODE SEL - AUTO 3
1	MODE SEL - AUTO 4
0	MODE SEL - AUTO 5

RDTOM/*DTOM*

BIT	PARAMETER
7	
6	
5	
4	
3	
2	
1	
0	

RDTIL/*DTIL*

BIT	PARAMETER
7	INTERFACE CONTROL FAIL
6	MCPC OUT OF TOLERANCE
5	MCPC OUT OF TOLERANCE
4	SPARE
3	THERMISTOR CIRCUIT FAIL
2	MCIU/GPC COMM FAIL
1	ENC FAILURE (NOT USED)
0	GPC COMMUNICATION FAIL

RDTIM/*DTIM*

BIT	PARAMETER
7	
6	
5	
4	
3	
2	
1	
0	

RDTSL/*DTSL*

BIT	PARAMETER
7	SPARE
6	SPARE
5	SPARE
4	SPARE
3	SPARE
2	SPARE
1	SPARE
0	SPARE

RDTSM/*DTSM*

BIT	PARAMETER
7	
6	
5	
4	
3	
2	
1	
0	

PAGES 2 & 4 (MCIU TO GPC)

ITEM	SOURCE	DESCRIPTION	FW ADDRESS (EX)	MCIU
1	MCIU	B/E STATUS REGISTER (BSR)	TSL,W	BSL,BSM
2	MCIU	B/E STATUS REGISTER	TSL,W	BSL,BSM
3	MCIU	B/E STATUS REGISTER	TSL,W	BSL,BSM
4	MCIU	B/E STATUS REGISTER	TSL,W	BSL,BSM
5	ABE	SHY ENCODER OUTPUT	TSL,W	ARSL,W
6	ABE	SHY ENCODER OUTPUT	TSL,W	ARSL,W
7	ABE	SHY FAIL FAIL, SPA BP REL	TSL,W	ARSL,W
8	ABE	SHY ENCODER OUTPUT	TSL,W	ARSL,W
9	ABE	SHY FAIL FAIL FLAGS	TSL,W	ARSL,W
10	ABE	ELP ENCODER OUTPUT	TSL,W	ARSL,W
11 (18)	ABE	ELP FAIL FAIL FLAGS	TSL,W	ARSL,W
12	ABE	ELP FAIL FLAGS	TSL,W	ARSL,W
13	ABE	WRM ENCODER OUTPUT	TSL,W	ARSL,W
14	ABE	WRM FAIL FLAGS	TSL,W	ARSL,W
15	ABE	WRM FAIL FLAGS	TSL,W	ARSL,W
16	ABE	WRM TACH OUTPUTS	TSL,W	ARSL,W
17	ABE	WRM FAIL FLAGS	TSL,W	ARSL,W
18	ABE	WRM FAIL FLAGS	TSL,W	ARSL,W
19	ABE	WRM TACH OUTPUTS, FLAGS	TSL,W	ARSL,W
20	ABE	WRM TACH OUTPUTS, ESSU BITS	TSL,W	ARSL,W
21	ABE	WRM TACH OUTPUTS, FLAGS	TSL,W	ARSL,W
22	PADC	TAC 5, TAC 7	TSL,W	MRSL,MRBL
23	PADC	TAC 6, TAC 8	TSL,W	MRSL,MRBL
24	PADC	TAC TAK MUX	TSL,W	MRSL,MRBL
25	PADC	THERMISTOR TEMPL (SENT	TSL,W	MRSL,W
26	PADC	THERMISTOR TEMPL (SENT	TSL,W	MRSL,W
27	PADC	THERMISTOR TEMPL (SENT	TSL,W	MRSL,W
28	PADC	THERMISTOR TEMPL (SENT	TSL,W	MRSL,W
29	DNC	ADDRESS FIELD, DATA FIELD	TSL,W	STSL,W
30	DNC	ADDRESS FIELD, DATA FIELD	TSL,W	STSL,W
31	DNC	ADDRESS FIELD, DATA FIELD	TSL,W	STSL,W
32	DNC	ADDRESS FIELD, SPARE	TSL,W	STSL,W
33	DNC	ADDRESS FIELD, DATA FIELD	TSL,W	STSL,W
34	DNC	ADDRESS FIELD, DATA FIELD	TSL,W	STSL,W
35 (19)	DNC	ADDRESS FIELD, MUX WORD 1	TSL,W	STSL,W
36	DNC	ADDRESS FIELD, MUX WORD 2	TSL,W	STSL,W
37	DNC	ADDRESS FIELD, MUX WORD 3	TSL,W	STSL,W
38	DNC	ADDRESS FIELD, MUX WORD 4	TSL,W	STSL,W
39	DNC	ADDRESS FIELD, MUX WORD 5	TSL,W	STSL,W
40	DNC	ADDRESS FIELD, MUX WORD 6	TSL,W	STSL,W
41	DNC	ADDRESS FIELD, MUX WORD 7	TSL,W	STSL,W
42	DNC	ADDRESS FIELD, MUX WORD 8	TSL,W	STSL,W
43	DNC	ADDRESS FIELD, MUX WORD 9	TSL,W	STSL,W
44	MCIU	M-MICROMPUTER BITE	TSL,W	CBL,CBM
45		SPARE	TSL,W	
46		SPARE	TSL,W	
47		SPARE	TSL,W	
48		SPARE	TSL,W	
49		SPARE	TSL,W	
4A		SPARE	TSL,W	
4B		SPARE	TSL,W	
4C		SPARE	TSL,W	
4D		SPARE	TSL,W	
4E		SPARE	TSL,W	
4F		SPARE	TSL,W	
50		SPARE	TSL,W	
51		SPARE	TSL,W	
52		SPARE	TSL,W	
53		SPARE	TSL,W	
54		SPARE	TSL,W	
55		SPARE	TSL,W	
56		SPARE	TSL,W	
57		SPARE	TSL,W	
58		SPARE	TSL,W	
59		SPARE	TSL,W	
5A		SPARE	TSL,W	
5B		SPARE	TSL,W	
5C		SPARE	TSL,W	
5D		SPARE	TSL,W	
5E		SPARE	TSL,W	
5F		SPARE	TSL,W	
60		SPARE	TSL,W	
61		SPARE	TSL,W	
62		SPARE	TSL,W	
63		SPARE	TSL,W	
64		SPARE	TSL,W	
65		SPARE	TSL,W	
66		SPARE	TSL,W	
67		SPARE	TSL,W	
68		SPARE	TSL,W	
69		SPARE	TSL,W	
6A		SPARE	TSL,W	
6B		SPARE	TSL,W	
6C		SPARE	TSL,W	
6D		SPARE	TSL,W	
6E		SPARE	TSL,W	
6F		SPARE	TSL,W	
70		SPARE	TSL,W	
71		SPARE	TSL,W	
72		SPARE	TSL,W	
73		SPARE	TSL,W	
74		SPARE	TSL,W	
75		SPARE	TSL,W	
76		SPARE	TSL,W	
77		SPARE	TSL,W	
78		SPARE	TSL,W	
79		SPARE	TSL,W	
7A		SPARE	TSL,W	
7B		SPARE	TSL,W	
7C		SPARE	TSL,W	
7D		SPARE	TSL,W	
7E		SPARE	TSL,W	
7F		SPARE	TSL,W	

ABE RECEIVE WORDS

TAL/*ARIL*

BIT	PARAMETER
7	SHY PAYBACK DRIVE FLAG
6	SHY ENCODER FAIL
5	SPARE
4	SPARE
3	SPARE
2	SHY TACH FAIL
1	SPARE
0	SPARE

TSL/*ARIL*

BIT	PARAMETER
7	SHY ENCODER FAIL
6	SHY TACH FAIL
5	SHY SPA DRV FAIL
4	SPARE
3	SHY MDA FAIL
2	SPARE
1	SHY TACH FAIL
0	SPARE

TBL/*ARSL*

BIT	PARAMETER
7	SPARE
6	SHY ENCODER FAIL
5	SHY SPA DRV FAIL
4	SPARE
3	SHY MDA FAIL
2	SPARE
1	SHY TACH FAIL
0	SPARE

TILL/*ARBL*

BIT	PARAMETER
7	SPARE
6	ELP SPA COMM FAIL
5	ELP SPA DRV FAIL
4	SPARE
3	ELP MDA FAIL
2	ELP TACH FAIL
1	SPARE
0	SPARE

TILM/*ARAL*

BIT	PARAMETER
7	WRP PAYBACK DRIVE FLAG
6	WRP ENCODER FAIL
5	PAYLOAD CAPTURED
4	EE EXTENDED
3	
2	WR PITCH
1	TACH OUTPUT
0	

TSM/*ARIM*

BIT	PARAMETER
7	
6	
5	
4	SPARES
3	
2	
1	
0	SNC ADDRESS FIELD

TSM/*ARSM*

BIT	PARAMETER
7	
6	
5	
4	SPARES
3	
2	
1	

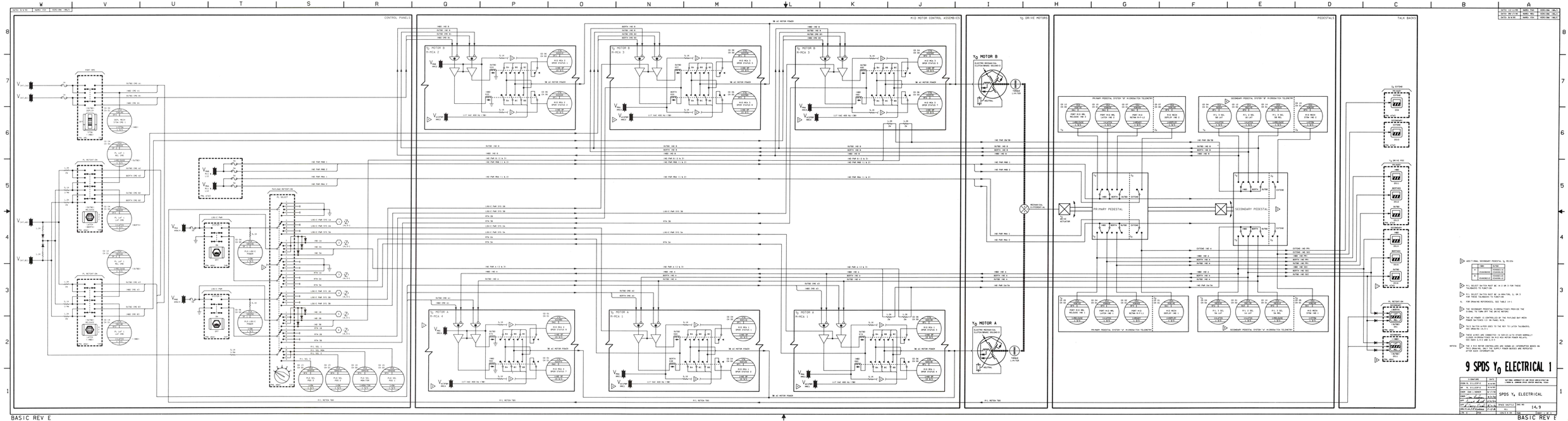
CONTROL PANELS
MID MOTOR CONTROL ASSEMBLIES
Y0 DRIVE MOTORS
PEDESTALS
TALK BACKS
Y0 MOTOR B
Y0 MOTOR A
PRIMARY PEDESTAL
SECONDARY PEDESTAL
BASIC REV E
9 SPDS Y0 ELECTRICAL 1
SPDS Y0 ELECTRICAL
14.9

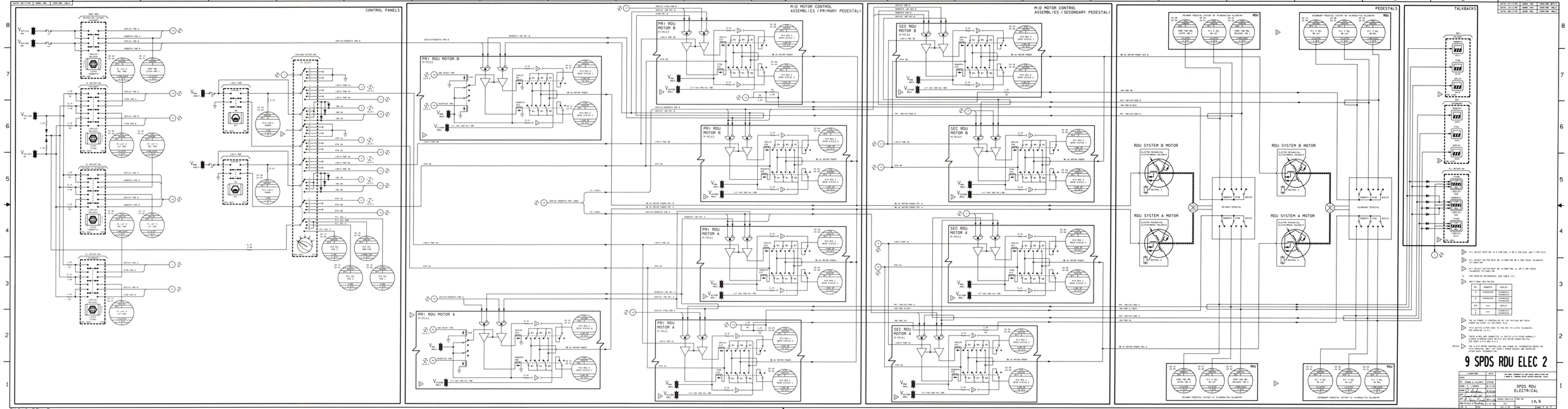
CONTROL PANELS
MID MOTOR CONTROL ASSEMBLIES (PRIMARY PEDESTAL)
MID MOTOR CONTROL ASSEMBLIES (SECONDARY PEDESTAL)
PEDESTALS
TALKBACKS
PRI RDU MOTOR B M-MCA3
PRI RDU MOTOR A M-MCA3
SEC RDU MOTOR B M-MCA3
SEC RDU MOTOR A M-MCA3
PRIMARY PEDESTAL SYSTEM "A" MICRONOTION TELEMETRY
SECONDARY PEDESTAL SYSTEM "A" MICRONOTION TELEMETRY
RDU SYSTEM B MOTOR
RDU SYSTEM A MOTOR
9 SPDS RDU ELEC 2
SPDS RDU ELECTRICAL
14.9
BASIC REV E

DATE/ INI/ ITEM/ NAME/ REV/ DESCRIPTION/ APPD

PEDESTAL DRIVE TRANSFER SYSTEM

PAYLOAD RELEASE SYSTEM

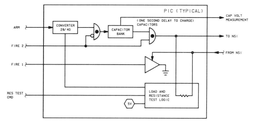

REFER TO THE SPDS MECHANICAL DRAWING 14.9-4

NORMALLY THE PM-PRIMARY PEDESTAL DRIVE IS ENGAGED AND SECONDARY PEDESTAL DRIVE IS DISENGAGED. DURING DRIVE TRANSFER, THE SECONDARY PEDESTAL DRIVE IS ENGAGED AND THE PM-PRIMARY PEDESTAL DRIVE IS DISENGAGED. SYNCHRONICITY.

WHEN PM-PRIMARY PEDESTAL DRIVE IS DISENGAGED, SHAFT PRESSURE IS LOCKED THE M-ORDNANCE.

WHEN SECONDARY PEDESTAL DRIVE IS ENGAGED, SHAFT PRESSURE IS LOCKED THE M-ORDNANCE.

NOTES: A SPRING CONNECTED TO THE ELECTRON-M PISTON PUSHES THE M-ORDNANCE TO THE RELEASE POSITION. REFER TO THE SPDS MECHANICAL DRAWING

9 SPDS P/L REL SYS PED DR TRANS SYS 3

CONTRACT	DATE
DSN: SL-53844-6928	26 JUL 99
CK: SL-53844-6928	26 JUL 99
ENGR: M. ORTIZ	26 JUL 99
DRAWN: E. Rocha	26 JUL 99
APP: Robert Arnold	26 JUL 99
APP: Kirk Hall	26 JUL 99
APP: Mike Hall	26 JUL 99

NOTICE: INFORMATION ON THIS SPACE AGE ELECTRONIC PROTOTYPE IS PROPRIETARY AND CONFIDENTIAL

SPDS PAYLOAD RELEASE SYSTEM AND PEDESTAL DRIVE TRANSFER SYSTEM

SPACE SHUTTLE | DWG NO: 14.9

SCALE: NONE | SHT 1 OF 1 | REV: E

BASIC REV E

BASIC REV E

DATE: 08/17/88 NAME: REV. VERS/DM: ONLY

PEDESTAL CONFIGURATION

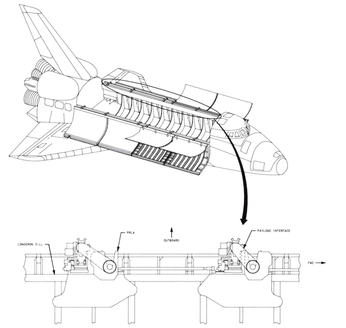

SPDS ORBITER INTERFACE - PORT SIDE

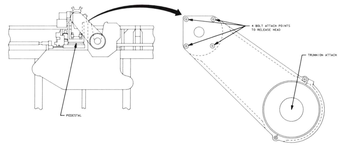

PAYLOAD INTERFACE PLATE

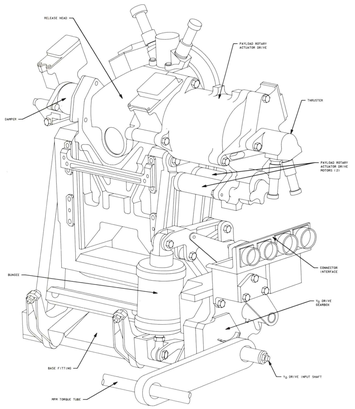

OUTBOARD FACE

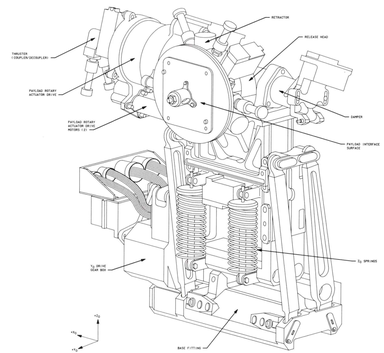

INBOARD FACE

SPDS OPERATION

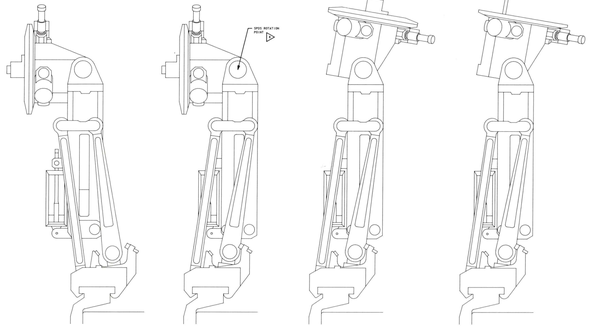

SPDS PAYLOAD DEPLOYMENT AND RELEASE MOTION

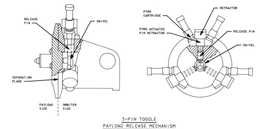

3-PIN TOGGLE PAYLOAD RELEASE MECHANISM

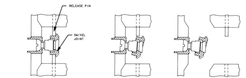

PAYLOAD RELEASE SEQUENCE

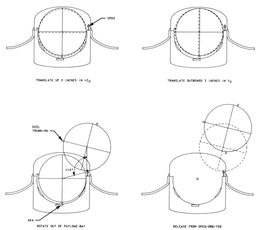

PAYLOAD DEPLOYMENT SEQUENCE

NOTES:

1. FOR DRAWING REFERENCES, SEE TABLE 14-I.

2. THE SPDS ROTATION POINT IS ALIGNED THE ST ZI AXIS

3. UNLOADED SPDS MOTOR RUN TIMES

FROM STOWED TO 3.0"	SEE SECO 2 HISTORY
	SEE SECO 2 HISTORY
Z_0 DRIVE SCRN TO 3"	98 SECO 2 HISTORY
EXTENDED/DEPLOYED	84 SECO 2 HISTORY
FROM DEPLOY	80 SECO 2 HISTORY
TO STOW	84 SECO 2 HISTORY
FROM ACTIVE	72 SECO 2 HISTORY
TO STOW	64 SECO 2 HISTORY

4. THE SECONDARY PEDESTAL IS FREE TO MOVE ON THE Y_0 FUNCTION TO COMPENSATE FOR THERMAL STRAIN/DEFLECTION

5. THE SPDS PEDESTALS CAN BE POSITIONED IN ANY OF THE ORBITER'S 15 BAYS ON FLIGHT PART OF STANDARD LONGERON

6. RELEASE IS ACCOMPLISHED WHEN 4 MAIN STANDARD ACTUATORS ARE RETRACTED. THE RELEASE HEAD IS FREE TO ROTATE AND TRANSLATE. THE SPDS PEDESTALS, THE PAYLOAD, IS SEPARATED FROM THE SPDS BY THE SPRING FORCE AND THE ROTATION OF THE PLATFORM SYSTEM TRAVELS 1.0 IN INCHES BEFORE THE PAYLOAD RELEASE MECHANISM IS CLEAR OF THE PAYLOAD INTERFACE PLATE TO PERMANENTLY ATTACHED TO THE PAYLOAD

7. THE PAYLOAD ROTARY DRIVE ACTUATOR REMOVES THE RELEASE MECHANISM FROM THE SPDS BY ROTATING THE PAYLOAD VERTICALLY OUTBOARD TO APPLY, AND THEN THE STORED POSITION AFT

8. THE Z_0 DRIVE SYSTEM PROVIDES 3 INCH OUTBOARD RETURN OF THE PAYLOAD FOR MECHANICAL RELEASE/CLEAR. IT USES THE MPM ACTUATOR AND DRIVE SHAFT AS INPUT. THE 3 IN MAY TO MOTION ARE BOTH REQUIRED FOR FULL TRANSLATION CLEARANCE

NOTES: THE COMPRESSED Z_0 SPRINGS PROVIDE 3 INCH UPWARD MOTION SUBSEQUENT TO RELEASE OF THE ADJACENT ROTATION LATCHES

9 SPDS MECH O/V 4

SIGNATURE	DATE	NOTICE: HORIZONTAL AND VERTICAL DIMENSIONS ARE ORBITER STRUCTURAL STATIONS
ORIGN: R.L.TOWNSEND JR.	5/31/88	
CK:		STABILIZED PAYLOAD DEPLOYMENT SYSTEM MECHANICAL OVERVIEW
CRAD: R.K. FINCH	6/17/88	
CHP: [illegible]	6/17/88	
APP: [illegible]	7/5/88	
APP: [illegible]	7/5/88	SIZE: SD SHEET: 14.9
CRAD: [illegible]	7/5/88	
QA:		SCALE: NONE SHEET 1 OF 1

DATE: 06/15/93	WORK: #5	VERSION: BASIC
DATE: 07/06/93	WORK: #7	VERSION: CRS-1
DATE: 09/17/93	WORK: #10	VERSION: CRS-1

PEDESTAL DESIGN

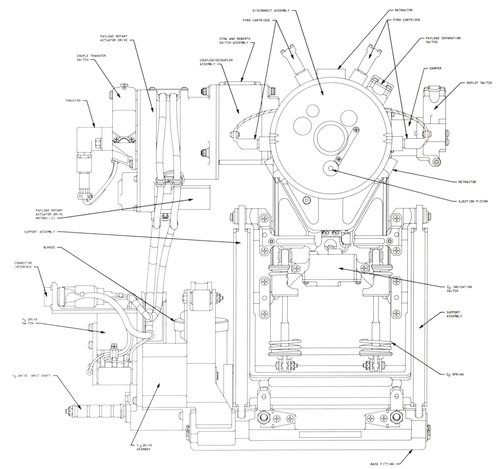

INBOARD FACE

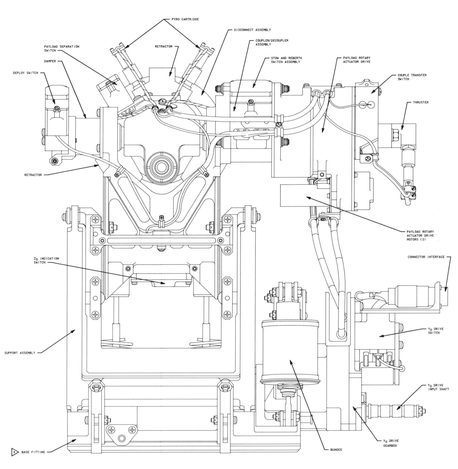

OUTBOARD FACE

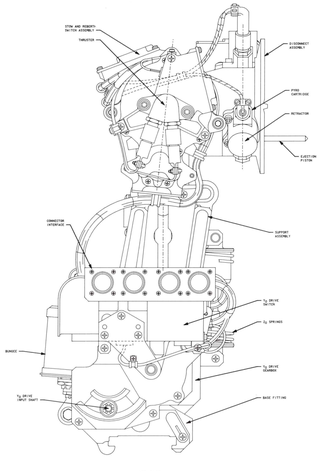

AFT FACE

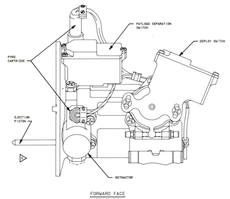

FORWARD FACE
PAYLOAD RELEASE MECHANISM

ROTARY DRIVE TRANSFER SYSTEM

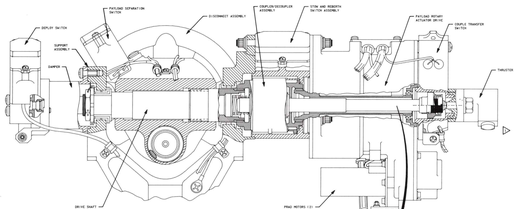

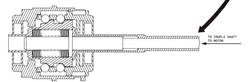

COUPLER ASSEMBLY
SECONDARY PEDESTAL

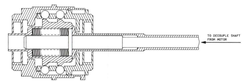

DECOUPLER ASSEMBLY
PRIMARY PEDESTAL

NOTES:

1. FOR DRAWING REFERENCES, SEE TABLE (A.)

2. RELEASE IS ACCOMPLISHED WHEN A NON-STANDARD INITIATED PYRO CARTRIDGE (SEE PYRO CARTRIDGE DETAIL) IS FIRED WHICH SEPARATES THE PAYLOAD FROM THE RELEASE MECHANISM. THE PAYLOAD IS SEPARATED FROM THE RELEASE MECHANISM BY THE SPRING FORCE OF THE EJECTION PISTON TRAVELS 2-3/4 INCHES BEFORE THE PAYLOAD RELEASE MECHANISM IS SEPARATED FROM THE PAYLOAD. THE EJECTION PISTON IS PERMANENTLY ATTACHED TO THE PAYLOAD.

3. THE BASE FITTING IS ALWAYS BOLTED TO THE BELOW DECK IN THE SAME LOCATION. THE BASE FITTING IS ALWAYS BOLTED TO THE BELOW DECK IN THE SAME LOCATION. THE PAYLOAD MAY.

4. FOR THE SECONDARY PEDESTAL, THE COUPLER IS NORMALLY STOWED FROM THE PAYLOAD ROTARY ACTUATOR DRIVE. THE COUPLER IS DRIVEN BY THE PAYLOAD ROTARY ACTUATOR DRIVE ACTUATOR TO THE DRIVE SHAFT

5. FOR THE PRIMARY PEDESTAL, THE DECOUPLER IS NORMALLY STOWED TO THE PAYLOAD ROTARY ACTUATOR DRIVE. IF THE SECONDARY PEDESTAL IS NOT PRESENT THE PAYLOAD ROTARY ACTUATOR FROM THE DRIVE SHAFT.

NOTICE 6. THE THRUSTER IS A PYROMATICALLY-DEVICE THAT INITIATES SEPARATION OF THE PAYLOAD FROM THE PEDESTAL. THE THRUSTER IS PRIMARY TO THE SECONDARY PEDESTAL. (I.E. THE COUPLER/DECOUPLER, THE PAYLOAD ROTARY ACTUATOR DRIVE, AND THE THRUSTER ALL HAVE REDUNDANCY. IF ONE FAILS, THE 2 A AND 2 B ONES WILL WORK-REDUNDANCE OPERATION. 7. THE PAYLOAD ROTARY ACTUATOR DRIVE IS LOCATED BETWEEN THE COUPLER (UNATTACHED) 7 DECOUPLER AND THE SECONDARY 7

9 SPDS MECH O/V 5

SIGNATURE		DATE	MECHNL KINEMATICS AND DRIVE DEPARTMENT 35A3 S. LOCKHEED BLVD. SUNITA VALLEY, TEXAS
DSGN: N.A./LOCKHEED
CHK:
ENGR: N.A. FINALS
APPR:			STABILIZED PAYLOAD DEPLOYMENT SYSTEM MECHANICAL OVERVIEW
APPR:			
APPR:			SCALE: DWG NO: 14.9
MANUFACTURE OF RECORD:			NO.1
SIZE: A	SPDS		DO NOT SCALE DRAWING

BASIC REV E

BASIC REV E

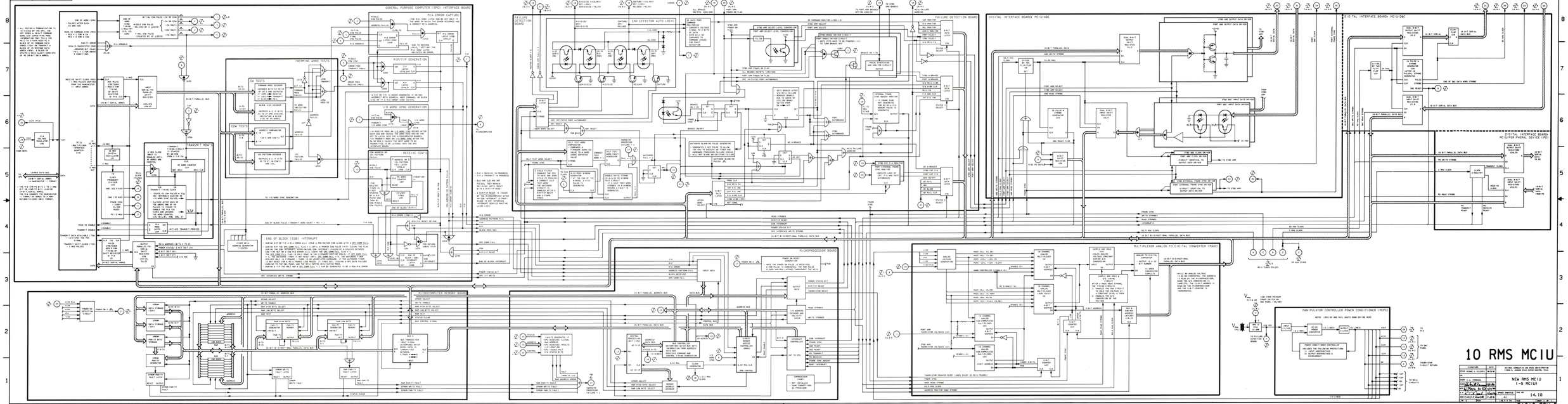
10 RMS MCIU
NEW RMS MCIU (-5 MCIU)
14.10
BASIC REV E
GENERAL PURPOSE COMPUTER (GPC) INTERFACE BOARD
FAILURE DETECTION BOARD
DIGITAL INTERFACE BOARD MCIU/ABE
DIGITAL INTERFACE BOARD MCIU/DBC
DIGITAL INTERFACE BOARD MCIU/PERI/THERMAL DEVICE (TD)
MULTIPLEXER ANALOG TO DIGITAL CONVERTER (MADC)
MICROPROCESSOR BOARD
MICROCOMPUTER MEMORY BOARD
MANIPULATOR CONTROLLER POWER CONDITIONER (MCPC)
INCOMING WORD TESTS
I/O WORD SYNC GENERATION
RECEIVE COM'S
TRANSMIT ROW
CW TESTS
COW TESTS
END OF BLOCK (EOB) INTERRUPT
MCIU ADDRESS (OCTAL)
I/O ADDRESS DECODER
MCIU ADDRESS DECODER
MCIU ADDRESS (BITS 4 TO 8)
POWER STATUS (BIT) BIT 20
I/O ADDRESS BUS
15 BIT PARALLEL ADDRESS BUS
16 BIT PARALLEL DATA BUS
MEMORY ADDRESS BUS
MEMORY DATA BUS
MEMORY CONTROL BUS
MEMORY ADDRESS DECODER
MEMORY CONTROLLER (MMC)

11 NEW MCIU F/W OV 1

DATA: 28/08/90	NAME: YOU	VERSION: APPL1
DATA: 28/08/90	NAME: YOU	VERSION: APPL1
DATA: 28/08/90	NAME: SAT	VERSION: APPL1

INTRODUCTION

THE MCIU FLIGHT DECK PROGRAMS ARE WRITTEN IN THE PASCAL LANGUAGE
1. ALGORITHMIC LANGUAGE) WERE TO USED IN THOSE AREAS WHICH ARE
2. FLEXIBLE OR IMPROVABLE TO EXPRESS SYSTEMATICALLY, E.G. THE MCIU
3. SYSTEM MANAGEMENT PROGRAMS. THE PASCAL LANGUAGE IS A HIGH LEVEL
PROGRAMMABLE MICRO-ONLY PRODUCT (PROM) - IT USES NOT STANDARD
PROGRAMMING TECHNIQUES AND IS EASY TO LEARN. IT IS ALSO VERY STANDARD
TO DEVELOPED TO PERFORM CYCLIC PROCESSING WITHIN THE MC IN ALL SECOND
TO PROCESS THE MCIU PROGRAMS WHICH ARE WRITTEN WITHIN THE MCIU WITH
TO PROCESSING EVENT IN MCIU SECONDS.

THIS SUPERVISOR IS ACHIEVED BY A DEDICATED SUBSYSTEM OF EXTERNAL
COMPONENTS WHICH ARE CONTROLLED BY THE MCIU SOFTWARE. THE MCIU SOFTWARE
BUILT-IN-TEST (BIT) SUBSYSTEM CONSISTS OF THE FOLLOWING:
- POWER-ON BUILT-IN-TEST (PBIT)
- CONTINUOUS BUILT-IN-TEST (CBIT)
- INITIATED BUILT-IN-TEST (IBIT)

THE MCIU BIT SUBSYSTEM IS ALSO RESPONSIBLE FOR THE FOLLOWING:
- ANALYSIS OF BIT DATA
- FAULT ISOLATION
- FAULT RECORDING
- FAULT REPORTING

THE MCIU BIT SUBSYSTEM IS ALSO RESPONSIBLE FOR THE FOLLOWING:
- ANALYSIS OF BIT DATA
- FAULT ISOLATION
- FAULT RECORDING
- FAULT REPORTING

THE MCIU BIT SUBSYSTEM IS ALSO RESPONSIBLE FOR THE FOLLOWING:
- ANALYSIS OF BIT DATA
- FAULT ISOLATION
- FAULT RECORDING
- FAULT REPORTING

MMS POWERUP SEQUENCE OF EVENTS

- ON RESS-MCU BPS APPLIED
  - ■ ■ LAMPS TEST 1 APPLIED - (NOT ACTIVATED TO CM GPC)
  - ■ ■ ALL LAMPS ON FOR MAX PERIOD
- MCIU POWER PHASE 1S SELECTED
  - ■ ■ MCIU CPU RESET FROM PBIT
  - ■ ■ MCIU EXECUTES LAMP TEST FOR 3 PERIODS BETWEEN MCIU AND ONE PANEL
  - ONE ELECTRONICS ARE ENABLED BEFORE WARM-RESTRAL (+5 VOLT) - THE MCIU WAS THEN SELECTED TO NORMAL MULTIPLEX STATE.
  - ■ ■ MCIU SET TO DISPLAY 'LOW' STATE ON THE THE WARN/MC CAUSED THE MCIU TO RESET
  - ■ ■ MCIU EXECUTES POWER-ON INITIALIZATION AND PBIT TESTS AFTER 10M-SEC UP TO 5 SECONDS
- MCIU IN POWER CONTROL - 1S CALLED
  - ■ ■ MCIU SOFTWARE IS NOW ALSO PRE-PROCESSED IN ON BPS 2 OR 3, THE MCIU START PROCESSING MMS SOFTWARE AND BUILT-IN TEST (BIT) THE MCIU PBIT DATA EVERY 80 MILLISECONDS, ACTIVATE 1/10 SECOND TIMER
  - ■ ■ MCIU SOFTWARE ALSO ENABLES THE MCIU TO COMMUNICATE WITH GPCS IN SYNCHRONIZED
  - ■ ■ MCIU SOFTWARE ALSO ENABLES THE MCIU TO SET UP AND A BLOCK OF NO RETRANSMIT DATA WORDS ONLY A TRANSMISSION IS PROCESSED
  - ■ ■ MCIU SOFTWARE ALSO ENABLES THE MCIU TO SET UP AND A BLOCK OF NO RETRANSMIT DATA WORDS ONLY A TRANSMISSION IS PROCESSED
  - ■ ■ MCIU SOFTWARE ALSO ENABLES THE MCIU TO SET UP AND A BLOCK OF NO RETRANSMIT DATA WORDS ONLY A TRANSMISSION IS PROCESSED
- MCIU IN INITIALISED - 1S CALLED
  - ■ ■ MCIU SOFTWARE ALSO ENABLES THE MCIU TO SET UP A BLOCK OF NO RETRANSMIT DATA WORDS ONLY A TRANSMISSION IS PROCESSED
  - ■ ■ MCIU SOFTWARE ALSO ENABLES THE MCIU TO SET UP A BLOCK OF NO RETRANSMIT DATA WORDS ONLY A TRANSMISSION IS PROCESSED
  - ■ ■ MCIU SOFTWARE ALSO ENABLES THE MCIU TO SET UP A BLOCK OF NO RETRANSMIT DATA WORDS ONLY A TRANSMISSION IS PROCESSED
- MCIU IN MANUALLY CAUSED (S) OR MORE THAN THE MCIU IS SELECTED
  - ■ ■ MCIU SOFTWARE ALSO ENABLES THE MCIU TO SET UP A BLOCK OF NO RETRANSMIT DATA WORDS ONLY A TRANSMISSION IS PROCESSED
  - ■ ■ MCIU SOFTWARE ALSO ENABLES THE MCIU TO SET UP A BLOCK OF NO RETRANSMIT DATA WORDS ONLY A TRANSMISSION IS PROCESSED
- MCIU IN MANUALLY CAUSED (S) OR MORE THAN THE MCIU IS SELECTED
  - ■ ■ MCIU SOFTWARE ALSO ENABLES THE MCIU TO SET UP A BLOCK OF NO RETRANSMIT DATA WORDS ONLY A TRANSMISSION IS PROCESSED
- MCIU IN MANUALLY CAUSED (S) OR MORE THAN THE MCIU IS SELECTED
  - ■ ■ MCIU SOFTWARE ALSO ENABLES THE MCIU TO SET UP A BLOCK OF NO RETRANSMIT DATA WORDS ONLY A TRANSMISSION IS PROCESSED

MMS POWER CYCLE SEQUENCE OF EVENTS

- ON RESS-MCU BPS ATT-1S
  - ■ ■ WHEN THE MCIU-1S2C2 POWER START-MMS POWER PHASE 1S (RESS-ATTRIB) - THE MCIU SOFTWARE ACTIVATES 1/10 SECOND MMS BUILT-IN-TEST (BIT) SUBSYSTEM TO THE MCIU
  - ■ ■ MCIU SOFTWARE ALSO ENABLES THE MCIU TO SET UP A BLOCK OF NO RETRANSMIT DATA WORDS ONLY A TRANSMISSION IS PROCESSED
  - ■ ■ MASTER ALARM CLEARED DUE TO ARCHRONOMICS MC-ALARM TIMING
- MCIU IN POWER CONTROL - 1S CALLED
  - ■ ■ THE MCIU TYPE SPECIFIC MODE PRO-CRITICAL, AND 1/MAKE THE MCIU SOFTWARE ACTIVATES THE MCIU BIT SUBSYSTEM. THE MCIU THEREFORE NO ACTIVITY FLAGS ARE GENERATED
  - ■ ■ MCIU SOFTWARE ALSO ENABLES THE MCIU TO SET UP A BLOCK OF NO RETRANSMIT DATA WORDS ONLY A TRANSMISSION IS PROCESSED
- MCIU IN STAND-CHAIR-1/TEM-TA, SPEC-1S
  - ■ ■ MCIU SOFTWARE ALSO ENABLES THE MCIU TO SET UP A BLOCK OF NO RETRANSMIT DATA WORDS ONLY A TRANSMISSION IS PROCESSED
- MCIU IN MANUALLY CAUSED (S) OR MORE THAN THE MCIU IS SELECTED

DATE: 11/29/90 MARK: MSU VERS/BM: MP/11
DATE: 10/23/90 MARK: XXX VERS/BM: ORBL
DATE: 11/9/90 MARK: LM VERS/BM: ORBL1

11 NEW MCIU DET F/W 2

NOTES: APPROVED FOR SPACE APPLICATION ONLY TEMP & ORBITER SPACE ENVIRO MATERIAL TOLER	SIGNATURE	DATE
	DESIGN ENGR: K.A. ELLESPIE	9/13/90
	DES. ENGR. MGR:	
NEW MCIU DETAILED FIRMWARE	CHIEF ENGINEER:	
	QUALITY ASSURANCE:	
DWG NO: 14.11	SPACE SHUTTLE MGR:	
	ALL FLIGHTS	
SHEET 1 OF 1 SHEETS	ISS / FS	

BASIC REV E

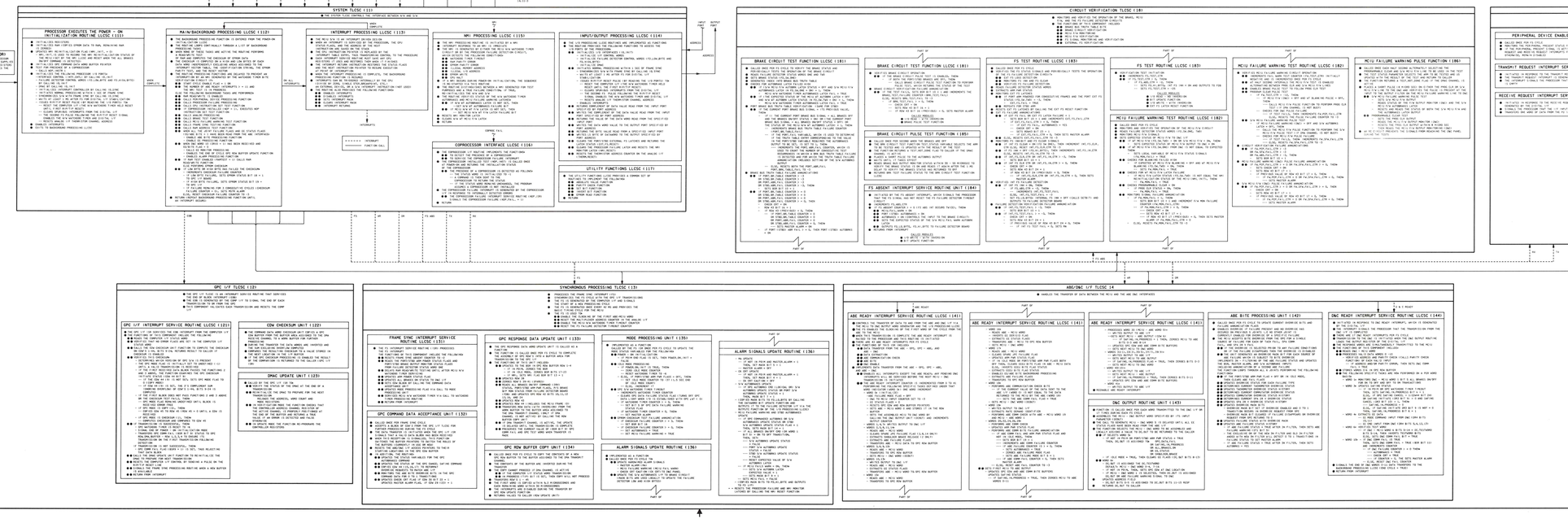

DATE: 11/29/90 | NAME: LAP | VERSION: UNIX

DATE: 10/23/90 | NAME: TCV | VERSION: UNIX
DATE: 11/29/90 | NAME: LAP | VERSION: UNIX

14.11-2

END EFFECTOR INTERFACE TLCSC (17)

- CONTROLS AND MONITORS THE AUTO CAPTURE/RELEASE AND TV(GO)/ED/EE/O(I)/EE SIGNAL LINES TO THE DAC PANEL
- PROCESSES DATA FROM THIS COMPONENT INCLUDES
  - EE CONTROL OUTPUT
  - EE COMMAND OUTPUT MONITORING
  - EE STATUS FLAG BITS
  - EEGLI BITS

EE PROCESSING LLCSC (171)

- UPDATES AUTO/MANUAL MODE STATUS
- PROCESSES EE STATUS FROM DAC STUS (SMA,SSI) EXTRACTED FROM DAC → MCIU DATA STREAM AND ASSIGNS 17 TO 4 LOCAL VARIABLE EE_MODE
  - IF EE_MODE BIT 15 = 0 (IF NOT IN AUTO MODE), THEN
    - MANUAL MODE
    - EE CAPTURE STATUS = FALSE
    - EE RELEASE STATUS = FALSE
    - EE RELEASE STATUS = FALSE
    - EE RELEASE COUNTER RESET TO -3
  - IF EE_MODE BIT 15 = 1 (IN AUTO MODE), THEN
    - IF EE CAPTURE CMD (SMA,SSI) = 1, THEN INCREMENTS EE CAPTURE CMD COUNTER (EE_CAPT_CTR)
      - ELSE, RESETS THE EE_CAPT_CTR TO -3
    - IF RELEASE CMD (SMA,SSI) = 1, THEN INCREMENTS EE RELEASE CMD COUNTER (EE_RLSE_CTR TO -3
    - DETERMINES CAPTURE/ RELEASE MODE
      - IF EE_CAPT_CTR > 0, THEN
        - EE CAPTURE STATUS = TRUE
        - EE RELEASE STATUS = FALSE
      - ELSE IF, EE_RLSE_CTR > 0, THEN
        - EE CAPTURE STATUS = FALSE
        - EE RELEASE STATUS = TRUE
  - END IF
- SETS EE CONTROL OUTPUT (EE_CNTL) ASSIGNED VIA EE STATUS FLAGS THAT INDEX THE EE CONTROL TABLE
  - EE STATUS FLAGS BITS
    - (INDEXES INTO EE CNTL FLAG COMBINATION)
    - IF (FCI_FLAG) IS SET AND NOT IN IDLE MODE, THEN
      - SETS EE FAIL FLAG (BOX BIT 17)
      - INCREMENTS THE EE FAIL FLAG COUNTER (EE_FAIL_FLAG)
    - IF EE CAPTURE STATUS = TRUE, THEN
      - SETS CHECK CRT = TRUE
      - SETS ROW 43 BIT 00 = 1
    - IF EE FAIL FLAG = 0, SETS MASTER ALARM = TRUE
    - ELSE, RESETS THE EE_FAIL_FLAG COUNTER TO -3
- EEGLI BITS
  - IF EEGLI BITS (INVERTED) AND NOT IN IDLE MODE AND ARM POWERED = 1, THEN
    - IF EEGLI BIT 17 = 1 AND INCREMENTS THE EEGLI_BIT_FAIL COUNTER
      - IF THE EEGLI_BIT_FAIL > = 0 THEN
        - CHECK CRT = TRUE
        - IF EEGLI_BIT_FAIL = 0, THEN SETS MASTER ALARM = TRUE
      - ELSE, RESETS THE EEGLI_BIT_FAIL COUNTER TO -3
- EE CONTROL
  - IF CAPTURE CANCEL BIT = 1, THEN CAPTURE MODE STATUS = FALSE
  - IF CAPTURE MODE STATUS = 1, THEN OUTPUTS CAPTURE MODE STATUS
  - IF RELEASE MODE STATUS = 1, THEN OUTPUTS RELEASE MODE STATUS FLAG TO FOR (FD_LD_BYTE)
  - IF RELEASE MODE STATUS = 1, THEN OUTPUTS RELEASE MODE STATUS FLAG TO FOR (FD_LD_BYTE)
- EE CONTROL OUTPUT MONITORING (SMA) AS BITS 9-11(+)
  - IN AUTO MODE, ROW 43 BITS 9-12 CONTAINS THE STATUS OF THE AUTO CAP/REL AND AUTO R/S/DEB/E CONTROL (I/HE OUTPUTS
  - IN MANUAL MODE, ROW 43 BITS 9-12 CONTAINS WHAT THE EE INPUT COMMAND FROM THE DAC (SMA BITS 9,8,10,11)
    - IF EE AUTO MODE SELECT (SMA,SSI) IS NOT EQUAL TO 0, THEN
      - IF AUTO CAP/REL OUTPUT = 1, THEN
        - SETS EE CAPTURE CMD OUTPUT STATUS (ROW 43,9)
        - SETS EXPECTED VALUE OUTPUT TO BE READ FROM THE EE COMMAND OUTPUT MONITOR
      - ELSE IF, AUTO CAP/REL OUTPUT = 0, THEN
        - SETS EE RELEASE CMD OUTPUT STATUS (ROW 43,10) = 1
        - SETS EXPECTED VALUE OUTPUT TO BE READ FROM THE EE OUTPUT MONITOR
      - IF AUTO R/S/DEB/E OUTPUT = 1, THEN
        - SETS EE R/S/DEB/E CMD OUTPUT STATUS (ROW 43,11) = 1
        - SETS EXPECTED VALUE
      - ELSE IF, AUTO R/S/DEB/E OUTPUT = 0, THEN
        - SETS EE DERS/E CMD OUTPUT STATUS (ROW 43,12) = 1
        - SETS EXPECTED VALUE
    - ELSE, MANUAL MODE (EE COPIES COMMAND INPUTS FROM DAC)
      - SETS EXPECTED VALUE
      - IF OPERATE POWER
      - R/D WRITE - WITH INVERSION

EE MONITOR BITE FUNCTION (172)

- CALLED ONCE PER FS CYCLE TO READ EE MONITOR INPUT AND COMPARES IT TO THE EXPECTED VALUE (SET BY EE PROCESSING LLCSC (171))
- READS EE OUTPUT MONITOR STATUS FROM FAILURE DETECTOR STATUS WORD ONE (FDL.DW.ONE)
- IF THE EE OUTPUT INHIBITED BY W/W WATCHDOG TIMER W/W F/V LATCH THEN CLEARS THE EXPECTED MONITOR OUTPUT
- IF EE MONITOR BIT IS NOT EQUAL TO THE INPUT READ FROM THE EE END MONITOR, THEN
  - SETS BOR BIT 16 = 1
    - IF EE MON FAIL COUNTER < 0, THEN INCREMENTS COUNTER
      - IF EE MON FAIL COUNTER > = 0, THEN
        - CHECK CRT = ON
        - SETS ROW 43 BIT 15 = 1
      - IF EE MON FAIL COUNTER = 0, SETS MASTER ALARM = TRUE
  - ELSE, RESETS THE EE MON FAIL COUNTER TO -3

CALLED MODULES
- I/O READ - WITH INVERSION
- I/O READ - WITH INVERSION

ANALOG INTERFACE TLCSC (16)

- PROCESSES THE DIGITAL INPUT PROVIDED BY THE MADC
  - MADC ACCEPTS ANALOG INPUTS FROM TWO 16 CHANNEL TYPE DIVISION ANALOG MULTIPLEXERS
  - SEQUENTIALLY SAMPLES AND CONVERTS THESE SIGNALS INTO BINARY CODED OUTPUT INCLUDING
    - 12 CHANNELS FROM CONTROLLER CHANNELS
    - 4 CALIBRATION VOLTAGES
    - 4 SUPPLY VOLTAGES
    - 32 SUBCOMPONENTS THERMISTOR INPUT CHANNELS
- SYNC FUNCTIONS OF THIS COMPONENT INCLUDES
  - MADC CONTROLLER BITE
  - MULTIPLEXER ADDRESSING BITE
  - HAND CONTROLLER CHANNELS BITE
  - MADC BITE
  - THERMISTOR CONDITIONING BITE

ANALOG PROCESSING LLCSC (161)

- CALLED ONCE PER FS CYCLE
- SETS MADC INPUT CHANNELS IN SEQUENCE FROM THE MADC I/F
- GETS MADC INPUT FROM MADC INPUT FUNCTION AND USES THE ANALOG FORMAT CONVERSION FUNCTION TO CONVERT TO 8-BIT FORMAT
  - IF MADC FAILURE IS RECURRING, THEN MADC_FAILURE = TRUE
- PROCESSES MADC INPUT ON A CHANNEL (CASE) BASIS AS FOLLOWS
  - CASE 0, 1, 2, 3, 4, 5, 6, 7: PROCESSES HAND CONTROLLER INPUTS
    - STORES SYMBOL 3 AND 2 IN SPC ROW 23 MUXL,LSB
  - 2, 3, 4, 5, 6, 7: PROCESSES HAND CONTROLLER INPUTS
    - STORES HAND CONTROLLER CHANNELS FOR HAND CONTROLLER HI/DISPLAY FOR EACH AXIS (1, 4, 2, 5, 7, 6, 3)
      - IF ABSOLUTE VALUE OF (MAIN - DUPLICATE) > 90 MV THEN, INCREMENT THAT HAND CONTROLLER'S AXIS COUNTER
        - IF HAND CONTROLLER FAIL COUNTER > 0, THEN
          - CHECK CRT = ON
          - SETS ROW 61 BIT 13 THRU 19 =1
        - ELSE, RESETS HAND CONTROLLER FAIL COUNTER (127)
      - STORES CHANNEL VALUE IN SPC ROW 24, 25, 26 X IN SPC ROW 24 MSB Y IN SPC ROW 24 LSB Z IN SPC ROW 25 MSB Th IN SPC ROW 25 LSB YAW IN SPC ROW 26 MSB R IN SPC ROW 26 LSB
  - 8, 9, 10, 11, 12, 13, 14, 15: PROCESSES MADC INPUT CHANNELS
    - IF THE ABSOLUTE VALUE OF (VOLTAGE - REFERENCE) > LIMIT
      - IF (MADC VOLTAGE OUT OF TOLERANCE) THEN
        - MADC_FAILURE = TRUE
      - IF (MCPC VOLTAGE OUT OF TOLERANCE) THEN
        - MCPC_FAILURE = TRUE
  - 24≤ THERMISTOR CHANNEL PROCESSING
    - STORES THERMISTOR HISTORY BUFFER
    - CONVERTS CHANNEL VALUE TO 8-BIT FORMAT
    - STORES THERMISTOR VALUE IN SPC ROW 27 MSB
    - STORES THERMISTOR VALUE IN SPC ROW 27 LSB
    - IF THERMISTOR ID = 2, THEN
      - IF THERMISTOR CHANNEL PROCESSING VOLTAGE IS OUT OF TOLERANCE) THEN, SETS THERM_FAILURE = TRUE
      - ELSE, THERM_FAILURE = FALSE
    - UPDATES THERMISTOR ADDRESS FIELDS
- MADC FAILURE ANNUNCIATION
  - IF MADC_FAILURE = TRUE
    - THEN, SETS BOR BIT 14 = 1 AND INCREMENT MADC FAIL COUNTER
      - IF MADC FAIL COUNTER > 0 THEN
        - CHECK CRT = ON
        - SETS MCIU FAIL WARN = TRUE
      - IF MADC FAIL COUNTER = 0, THEN SETS MSTR ALARM
      - ELSE, RESETS MADC FAILURE COUNTER TO -3
- MCPC FAILURE ANNUNCIATION
  - IF MCPC_FAILURE = TRUE
    - THEN, SETS BOR BIT 15 = 1 AND INCREMENT MCPC FAIL COUNTER
      - IF MCPC FAIL COUNTER > 0 THEN
        - CHECK CRT = ON
        - SETS MCIU FAIL WARN = TRUE
      - IF MCPC FAIL COUNTER = 0, THEN SETS MSTR ALARM
      - ELSE, RESETS MCPC FAILURE COUNTER TO -3
- THERMISTOR CONDITIONING (SMA) AS BITE VERIFICATION
  - IF THERMISTOR ID = 1, THEN THERM_COND_FAIL = THERM_FAIL
  - IF THERM_COND_FAIL = TRUE
    - IF THERM FAIL BIT 12 = 1 AND INCREMENTS THE THERM FAIL COUNTER
      - IF THE THERMISTOR FAIL COUNTER > = 0 THEN
        - CHECK CRT = ON
        - IF THERM FAIL COUNTER = 0, THEN SETS MSTR ALRM
        - ELSE, RESETS THERM FAIL COUNTER TO -96
  - IF THERMISTOR ID = 34, CALLS THERM_RESET FUNCTION
  - INCREMENTS THERMISTOR ID

CALLED MODULES
- MADC INPUT FUNCTION
- A/D FORMAT CONVERSION FUNCTION
- THERMISTOR RESET FUNCTION
- ABSOLUTE VALUE FUNCTION

ANALOG FORMAT CONVERSION FUNCTION (163)

- CONVERTS A 12-BIT BINARY OFFSET INPUT VALUE TO AN 8-BIT 2'S COMPLEMENT OUTPUT VALUE
- THE M/L BYTE FLAG IS USED TO CONTROL THE PLACEMENT OF THE 8-BIT OUTPUT VALUE IN EITHER THE HIGH OR LOW BYTES OF THE FUNCTION RETURN VALUEH

MADC INPUT FUNCTION (162)

- SAMPLES A SINGLE MADC CHANNEL ON A PAIR OF CHANNELS
- AS EACH CHANNEL IS SAMPLED THE MULTIPLEXER ADDRESSING IS VERIFIED
- RETURNS THE VALUE OF THE STATUS OF THIS VERIFICATION
- MADC ADDRESS
- ALL MADC CHANNELS ARE READ INTERRUPTS ARE DISABLED TO MINIMIZE THE TIME BETWEEN CONSECUTIVE MADC_DATA READ STROBES TO THE ANALOG I/F

H/W WATCHDOG TIMER/PROCESSOR FAILURE TLCSC (19)

- SERVICES AND VERIFIES THE OPERATION OF THE MCIU H/W WATCHDOG TIMER CIRCUIT AND VERIFIES THE OPERATION OF THE PROCESSOR FAILURE DETECTION CIRCUIT

H/W WATCHDOG TIMER PROCESSING LLCSC (191)

- IMPLEMENTED AS A FUNCTION
- THE CALL MUST occur WITH THE 4 MS PERIOD FOLLOWING THE FS INTERRUPT
- THE H/W WATCHDOG TIMER CIRCUIT CONSISTS OF
  - NORMAL WATCHDOG TIMER PROCESSING
    - OUTPUTS A DATA WORD DERIVED FROM THE NUMBER OF I/O INTERRUPTS THAT HAVE OCCURRED FOR THE MDC, ENC, AND ANALOG I/F'S AND FROM THE RESULT OF THE CPU INSTRUCTION SET TEST TO THE FAILURE DETECTOR LATCH
    - GENERATES AN MPU I/H
      - THE LATCH VALUE FAILS A COMPARISON TO THE WATCHDOG TIMER OUTPUT WORD OR
      - WRITE DOES NOT occur WITHIN A 4 MS WINDOW FOLLOWING THE FS INTERRUPT
    - CHECKS FOR W/W F/V LATCH
  - W/W WATCHDOG TIMER CIRCUIT VERIFICATION
    - GENERATES SEVERAL WATCHDOG TIMER FAILURES IN A BLANKING PULSE PREVENTS THESE FAILURES FROM SETTING THE MCIU F/V LINE TO ENC
    - A BLANKING PULSE SYNCHRONIZED TO THE FS INTERNAL AND IS GENERATED ONCE EVERY SEC PROVIDED
      - THE ALL BRAKES ON/OFF SWITCH IS OFF
      - THE MCIU INTERRUPT LATCH BIT IS NOT SET
      - THE MCIU W/W WATCHDOG TIMER/PROCESSOR FAILURE MCIU F/V LATCH IS NOT SET
    - CHECKS FOR BLANKING PULSE FAILED LOW
    - IF FD_DA_THA 'WT BLANKING STATUS = OFF, THEN
      - INCREMENTS WT_BLANK_CTR
      - ELSE, RESETS TO -3
    - BLANKING FAILED LOW FAILURE ANNUNCIATION
      - IF WT_BL_FAIL_LOW > -3, THEN
        - INCREMENTS WT_BL_FAIL_LOW + 1
      - IF WT_BL_FAIL_LOW = 0, THEN
        - CHECK CRT = ON
        - SETS ROW 43 BIT 22 = 1
      - ELSE, RESETS WT_BL_FAIL_LOW TO -3
    - CHECKS FOR TEST FAILURE
      - IF TEST IS ENABLED (WT_TEST_STEP = 1), THEN
        - CHECKS FOR W/W WT AUTOMATIC LATCH NOT SET BY MPU
          - INCREMENTS WT_ABR_FAIL_CTR IF WT_ABR_FAIL = 1
          - ELSE, RESETS WT_ABR_FAIL_CTR TO -3
        - CHECKS FOR W/W WT MCIU F/V LATCH NOT SET BY MPU
          - INCREMENTS WT_FA_ABR_CTR IF
          - WT_FA_ABR = 1
          - ELSE, RESET WT_FA_ABR_CTR TO -3
    - CHECKS FOR MISSING MPU
      - IF MPU_TEST = AUTOMODE TIMER TIMEOUT, THEN
        - SETS BOR BIT 10 = 1 AND INCREMENTS WT_TEST_CTR
        - IF WT_TEST_CTR > 0, THEN SETS
    - RESTARTS TEST SEQUENCE (WT_TEST_CTR = -24)
    - MAINTAINS FAILURE ANNUNCIATIONS
    - CHECK FOR W/W WATCHDOG TIMER LATCH FAILURE (NOT SET BY MPU)
      - INCREMENTS WT_ABR_FAIL + 1, THEN
        - CHECK CRT = ON
        - SETS ROW 43 BIT 17 = 1
        - IF NOT PREVIOUSLY ANNUNCIATED, SETS MASTER ALARM
    - WT TEST FAILURE
      - IF WT_TEST(_FAIL NOT EQUAL TO 0, THEN
        - SETS BOR BIT 10 = 1
        - CHECK CRT = ON
        - IF NOT PREVIOUSLY ANNUNCIATED, SETS MASTER ALARM
    - UPDATES LATCH STATUS VARIABLES
      - IF ALL_BRAKES_ON = ALL BRAKES COMMAND ON TO OFF TRANSITION, THEN
        - WT_ALL_BRAKES_STOW = OFF
        - WPL_INIT = OFF
      - IF MPU_INIT = ON, SETS WT AUTOBRK LATCH = ON
    - WATCHDOG TIMER OUTPUT MONITORING
      - CHECKS FUNCTIONING OF W/W BITE VERIFICATION
      - IF BLANKING = ON AND FD_DA_THA 'W'# WT BLANKING = ON AND EE_MODE = OFF, THEN
        - IF WT TEST SELECT 2 -16, ENABLES PROCESSOR
        - ELSE, RESETS TO -3 (WT 2)
    - GENERATES OUTPUT FOR WT CIRCUIT
    - UPDATES WATCHDOG TIMER I/F
    - SIGNALS MPU STATUS TO THE THA/W/BACKGROUND LLCSC WHETHER OR NOT TO BEGIN WT TEST SEQUENCING TASKS
      - IF MPU_INIT = ON, WPL_INIT = ON = ; NO TASKS
      - STARTCYCLE FLAG = TRUE = BEGIN TASKS

CALLED MODULES
- I/O READ - WITH INVERSION
- I/O WRITE - WITH INVERSION

PROCESSOR FAILURE PROCESSING LLCSC (192)

- CALLED ONCE PER FS CYCLE
- WHEN ENABLED (PFI_TEST_EN) BY THE WATCHDOG TIMER PROCESSING LLCSC, THE PFI_TEST_STEP IS INCREMENTED AND CONTROLS THE TESTING OF THE OPERATION OF THE PROCESSOR FAILURE DETECTOR CIRCUIT. THESE ERROR CONDITIONS INCLUDEA
  - PROCESSOR FAILURE ERROR
  - EPROM PARITY
  - RAM ADDRESS
  - I/O ADDRESS
  - EPROM WRITE
  - RAM WRITE
- A PROCESSOR FAILURE CIRCUIT FAILURE IS REPORTED, IF THE MPU IS NOT GENERATED BY ANY OF THESE TEST CONDITIONS (VERIFIES THE CIRCUIT FOR THE MPU)
- CHECKS FOR W/W WATCHDOG TIMER AUTOMORASS FAILURE
- CHECKS FOR W/W WT MCIU F/V LATCH FAILURE

CALLED MODULES
- DISABLE/ENABLE INTERRUPTS
- I/O READ - BITE DATA
- I/O WRITE - BITE DATA
- R/T MANIPULATION FUNCTION
- R/T MANIPULATION FUNCTION
- PROCESSOR FAILURE GENERATION UNIT

PROCESSOR FAILURE GENERATION UNIT (193)

- IMPLEMENTED AS A FUNCTION
- GENERATES MPU'S TO TEST THE OPERATION OF THE PROCESSOR FAILURE DETECTION CIRCUITS WHICH INCLUDEA
  - PROCESSOR FAILURE
  - EPROM PARITY FAIL
  - I/WR/O ADDRESS RANGE FAIL
  - EPROM WRITE FAIL
  - CPU HALT
- THE PFI_TEST_SELECT INPUT PARAMETER IS USED TO SELECT THE TYPE OF FAILURE CONDITION GENERATED
- THE TEST_DATA CONTAINS THE DATA VALUE REQUIRED BY THE SELECTED TEST

PROCESSOR MODULE TESTING TLCSC (110)

- TESTS THE OPERATION OF THE CPU, COPROCESSOR, AND THE RAM MEMORY COMPONENTS OF THE PROCESSOR MODULE

PROCESSOR MODULE TEST CONTROL LLCSC (1101)

- IMPLEMENTED AS A FUNCTION
- TESTS THE PROCESSOR MODULE COMPONENTS INCLUDING CPU, MDP, AND RAM MEMORY
- THESE TESTS INCLUDEA
  - CPU INSTRUCTION SET
  - COPROCESSOR INSTR SET
  - RAM ADDRESS
  - RAM READ/WRITE
- THE INPUT PARAMETER TEST_SELECT IS USED TO SELECT THE PARTICULAR TEST TO BE EXECUTED
- THE TESTS ARE NORMALLY CALLED ONCE PER FS CYCLE, AND THE RAM READ/WRITE TEST IS ALSO CALLED DURING WAIT LOOPS

CPU INSTRUCTION SET TEST UNIT (1102)

- IMPLEMENTED AS A FUNCTION
- EXECUTES A SEQUENCE OF CPU INSTRUCTIONS WITH A PREDETERMINED RESULT ? IF THE COMPUTED VALUE DOES NOT EQUAL THE EXPECTED VALUE, A FAILURE STATUS IS RETURNED TO THE CALLER

NDP INSTRUCTION SET TEST UNIT (1103)

- IMPLEMENTED AS A FUNCTION
- EXECUTES A SEQUENCE OF COPROCESSOR INSTRUCTIONS WITH A PREDETERMINED RESULT ? IF COMPUTED VALUE DOES NOT EQUAL THE EXPECTED RESULT, A FAILURE FLAG IS RETURNED TO THE CALLER

RAM ADDRESS TEST UNIT (1104)

- IMPLEMENTED AS A FUNCTION
- EXAMINES PAIRS OF RAM LOCATIONS CHOSEN SUCH THAT AN ADDRESS BIT FAILURE CAUSES THE LOCATIONS TO MAP TOGETHER
- FOR EACH PAIR OF WORDS SELECTED
  - WRITES A ONE - ZERO PATTERN TO THE LOCATION
  - ZEROES BOTH LOCATIONS
  - WRITES A MON - ZERO PATTERN TO ONE LOCATION
  - VERIFIES THAT THE OTHER LOCATION HAS REMAINED ZERO
- A TEST FAILURE WILL GENERATE A MEMORY INTERFACE CONTROL FAIL (I/CF) ANNUNCIATION TO THE DAC AND SPC (I/F?)

RAM READ/WRITE TEST UNIT (1105)

- IMPLEMENTED AS A FUNCTION (ONLY WHEN INTERRUPTS DISABLED)
- EXAMINES EACH USED RAM LOCATION AND TESTS IT FOR STUCK AT FAULTS
- FOR EACH TEST WORD
  - SAVES THE CONTENTS OF THE LOCATION
  - WRITES A MON - ZERO PATTERN AT THE LOCATION
  - READS THE LOCATION AND VERIFIES THAT THE THE LOCATION HAS REMAINED UNCHANGED
  - REPEATS THE TEST WITH THE COMPLEMENT OF THE SELECTED DATA PATTERN
- GENERATES AN INTERFACE CONTROL FAIL (I/CF) ANNUNCIATION TO DAC AND SPC
- RETURNS TEST RESULT TO CALLER

11 NEW MCIU DET F/W 3

SIGNATURE	DATE	NATIONAL AERONAUTICS AND SPACE ADMINISTRATION L'NDON B. JOHNSON SPACE CENTER HOUSTON, TEXAS
DSGN: A.A. GILLESPIE	9/13/90	
CK: A.S. URQUHART	10/10/90	NEW MCIU DETAILED FIRMWARE
ENGR: RONALD L. KENN		
ENGR: Ronald Kenn 11/7/90		
MGR: R. Mayo for R.D. 11/7/90		
MGR: R.T. Lund 11/7/90		
APPVL: M.S. Caldwell 11-28-90	SPACE SHUTTLE / ALL FLIGHTS	DWG NO 14.11
SIM: N/A	PROG: N/A	SHEET 1 OF 1

BASIC REV E

BASIC REV E

11 F/W MEMORY 4

NEW MCI/SCI FIRMWARE MEMORY MAP

DRAWN	
CHECKED	
ENGR APPROVAL	
MFG APPROVAL	
QUALITY APPROVAL	
PROJECT ENGINEER	
MATERIAL	
FINISH	
NEXT ASSY	
PROPRIETARY NOTICE	

MATERIAL DESIGNATED BY ENGR AUTHORITY ONLY. SEE ENGR DRAWING FOR APPLICABLE MILSTDS, ETC.

DO NOT SCALE DRAWING

UNLESS OTHERWISE SPECIFIED DIMENSIONS ARE IN INCHES. TOLERANCES ARE: FRACTIONS ±1/64 DECIMALS .XX ±.01 .XXX ±.005 ANGLES ±1°

SPACE ASSETS, INC.

SIZE: B | CAGE CODE: 14.11 | SHEET 1 OF 1

BASIC REV E

RAM MEMORY MAP



ROM MEMORY MAP

VECTORED INTERRUPT TABLE

TYPE	FUNCTION	LEVEL
0	SYSTEM RT CLOCK	5/0
1	SYNCHRO STROBE	5/0
2	SYNCHRO STROBE - INCREMENT	5/0
3	NOT USED	5/0
4	ERROR/Spare	5/0
5/6	NOT USED	5/0
7	SPARE	5/0
8	ABS DATA READY	5/0
9	ABS DATA ERROR	5/0
10	TRANSMIT REQUEST	5/0
11	MEDIUM ASSEMBLY	5/0
12	SPARE (ERR, ABSENT)	5/0
13	NOT USED	5/0
14	UNEXPECTED ERROR	5/0
15	NOT USED	5/0
16/255		

DATA TABLES

LOCATION	DESCRIPTION	LEVEL/ UNIT	USAGE	SIZE (WORDS)	INITIAL VALUE
ABS_COMM_BUF	ABS COMMUNICATION BUFFER	1/45	L	45	
ABS_COMM_BUF_PTR	ABS COMMUNICATION BUFFER POINTER	1/45	L	1	
ABS_COMM_FLG	ABS COMMUNICATION BUFFER FLG FLAGS	1/45	L	1	0
ABS_COMM_FLG_CLR	ABS COMMUNICATION BUFFER FLG CLEAR	1/45	L	1	0
ABS_FULL_FLAGS	ABS JOURNEY FLAG FLAGS	1/45	L	1	0
ABS_FULL_MASK	ABS FAILURE MASK STATUS FLAG	1/45	L	1	0
ABS_FAIL_ST	ABS FAILURE STATUS	1/45	L	1	0
ABS_FAIL_STATUS	ABS FAILURE STATUS	1/45	L	1	0
ABS_FULL_MASK	ABS FAILURE MASK	1/45	L	1	0
ABS_OUT	NO-HI-ABS WORD OUT	1/45	L	1	0
ABS_OUT_BUF	ABS BITE DISORDER BUFFER	1/45	L	1	0
ABS_DISORD_CTR	ABS BITE DISORDER ENABLE	1/45	L	1	0
ABS_RET	ABS BITE DISORDER RETURN	1/45	L	1	0
ADDRESS1	ERROR READ FUNCTION INPUT PARAMETER	1/47	L	1	N/A
ADDRESS2	ERROR READ FUNCTION INPUT PARAMETER	1/47	L	1	N/A
ADDRESS3	ERROR READ FUNCTION INPUT PARAMETER	1/47	L	1	N/A
ADDRESS4	ERROR READ FUNCTION INPUT PARAMETER	1/47	L	1	N/A
ADJ_BUT_0	PAGE DATA	1/45	L	1	0
ADJ_BUT_1		1/45	L	1	0
ADJ_BUT_2	PAGE ADDRESS DATA	1/45	L	1	0
ADJ_BUT_3		1/45	L	1	0
ADJ_BUT_4	PAGE ADDRESS DATA	1/45	L	1	0
ADJ_BUT_5		1/45	L	1	0
ALL_BRAKES_ON	ALL BRAKES ON/OFF COMMAND (ZERO) STATUS	1/45	L	1	0
ALL_BRAKES_ON_FLG	ALL BRAKES ON FLAG FLAGS	1/45	L	1	0
ALL_BRAKES_ON	ALL BRAKES ON STATUS	1/45	L	1	0
ANALOG_IN	ANALOG INPUT DIAGNOSTIC	1/45	L	1	0
APM_POWER	APM POWER STATUS FLAG	1/45	L	1	0
AUTOBRAKES	AUTOBRAKES FLAG	1/45	L	1	0
AUTOBRAKES_LATCH_FAIL	S/W AUTOBRAKES LATCH FAILURE FLAG	1/45	L	1	0
BLANK_FAIL_CTR	S/W # OF MCI T/A BLANK/NO STRB INTERNAL COUNTER	1/45	L	1	0
BLANK_FAIL_CTR	S/W # OF MCI T/A BLANK/NO STRB INTERNAL COUNTER	1/45	L	1	0
BLANK_FAIL_STATUS	S/W # OF MCI T/A BLANK FLAG	1/45	L	1	0
BRAKE_TEST_ST	BRAKE PULSE TEST ENABLE FLAG	1/45	L	1	0
BR_PULSE	BRAKE PULSE TEST EXECUTION STATUS	1/45	L	1	N/A
BRK_STATUS	BRAKE PULSE TEST EXECUTION STATUS	1/45	L	1	N/A
BRK	BITE STATUS REGISTER	1/45	L	1	0
	BIT 15				
	BIT 14				
	BIT 13				
	BIT 12				
	BIT 11				
	BIT 10				
	BIT 9				
	BIT 8				
	BIT 7				
	BIT 6				
	BIT 5				
	BIT 4				
	BIT 3				
	BIT 2				
	BIT 1				
	BIT 0				
BRK_BITS	BRK BIT 0 STATUS	1/45	L	1	0
CHECKSUM_FAIL	SYRAN CHECKSUM FAILURE COUNTER	1/45	L	1	0
CHECKSUM_VAL1/2	CHECKSUM STATUS FLAG	1/45	L	1	0
CHECK_CNT	CHECK CNT COUNTDN	1/45	L	1	0
COMM_SYNRM-DC_ST	COMMUNICATION SYNRM-DISC STATUS H-STORY	1/45	L	1	0
COMM_VAT	COMMUNICATION VECTORIZED STATUS WORD	1/45	L	1	0
	# = SYNRM-DISC ERROR, T = TIMEOUT, V = VAT ERROR, OT = OUT OF SEQ				
CPU_VAT_ERROR	CPU VAT ERROR STATUS	1/45	L	1	0
CPU_ERROR	CPU ERROR LATCH PORT ADDRESS	1/45	L	1	0xFFDD
CPU_STATUS	CPU ERROR LATCH PORT STATUS	1/45	L	1	0
CPU_TEST	CPU INSTRUCTION TEST TEST FAILURE STATUS	1/45	L	1	N/A
CPU_TEST_CTR	CPU TEST FAILURE COUNTER	1/45	L	1	N/A
CPU_TEST_FAIL	CPU TEST FAILURE STATUS	1/45	L	1	N/A
DATA_IN	SELECT COUNTER/ON INPUT PARAMETER	1/45	L	1	N/A
DATA_IN	SELECT COUNTER/ON INPUT PARAMETER	1/45	L	1	N/A
DATA_IN	SELECT COUNTER/ON INPUT PARAMETER	1/45	L	1	N/A
DATA_IN	SELECT COUNTER/ON INPUT PARAMETER	1/45	L	1	N/A
DCOUT	FUNCTION RETURN VALUE	1/45	L	1	N/A
DCOUT_ON	FUNCTION RETURN VALUE	1/45	L	1	N/A
DC-IO-S	DAU/MCU INPUT COUNTER	1/45	L	1	0
DC_OUT	MCU-to-DAU OUTPUT DATAWORD	1/45	L	1	0x0004
DC_TESTWRD	DAU TESTWORD TIME COUNTER	1/45	L	1	0
DDD1=DAT_CNT	DISTRIB. INTERFACE STATUS WORD PORT ADDRESS	1/45	L	1	0xFFD9
DIS_OUT	DISTRIB. INTERFACE STATUS WORD PORT ADDRESS	1/45	L	1	0xFFD9
DMA_CHNL_TC	DMA CHANNEL 0 ADDRESS REGISTER	1/45	L	1	0
DMA_CHNL_TC	DMA CHANNEL 1 TERMINAL COUNT	1/45	L	1	0
DMA_CHNL_TC	DMA CHANNEL 1 ADDRESS REGISTER	1/45	L	1	0
DMA_CHNL_TC	DMA CHANNEL 1 TERMINAL COUNT	1/45	L	1	0x0001
DMA_CNTL	DMA CONTROLLER UPDATE FUNCTION RETURN	1/45	L	1	0
DMA_MODE	DMA CONTROLLER MODE REGISTER	1/45	L	1	0
DMA_STATUS	DMA STATUS	1/45	L	1	0xFFD8
DUAL_CHANNEL	DUAL CHANNEL READ FLAG	1/45	L	1	N/A
DUAL_CHNL_ENABLE	DUAL CHANNEL ENABLE FLAG	1/45	L	1	N/A
EC_CAPTURE	EC CAPTURE MODE STATUS FLAG	1/45	L	1	0
EC_CAPT_CTR	EC CAPTURE MODE COUNTER	1/45	L	1	0
EC_CMD_ST	END EFFECTOR COMMAND STATUS	1/45	L	1	0
EC_DAT	EC CONTROL TABLE DATA	1/45	L	1	0
EC_FAIL	EC STATUS FAILURE COUNTER	1/45	L	1	0
EC_FAIL_FAIL	EC STATUS FAILURE FAILURE COUNTER	1/45	L	1	0
EE_MODE	SAW EFFECTOR MODE STATUS	1/45	L	1	0
EE_COMMAND	EE COMMAND MONITOR EXPECTED VALUE	1/45	L	1	0
EE_MON_FAIL	EE MONITOR FAILURE COUNTER	1/45	L	1	0
EE_MON_ST	SAW EFFECTOR COMMAND OUTPUT MONITOR STATUS	1/45	L	1	0
EE_OUT	EE CONTROL OUTPUT	1/45	L	1	0
EE_OUT_ST	SAW EFFECTOR CONTROL STATUS	1/45	L	1	0
EE_STATUS	SAW EFFECTOR STATUS FLAGS	1/45	L	1	0
EEEE1/0 BIT TEST	EEEE1/0 BIT TEST STATUS	1/45	L	1	0
EEEE1/0_ST	EEEE1/0 STATUS	1/45	L	1	0
EEPROM_ADDR	EEPROM ADDRESS	1/45	L	1	0
EEPROM_DATA	EEPROM DATA	1/45	L	1	0
EEPROM_ERR_CTR	EEPROM ERROR COUNTER	1/45	L	1	0
EEPROM_FAIL	EEPROM FAILURE STATUS	1/45	L	1	0
EEPROM_FAIL_CTR	EEPROM FAILURE COUNTER	1/45	L	1	0
EEPROM_FAIL_ST	EEPROM FAILURE STATUS	1/45	L	1	0
EEPROM_WRITE	EEPROM WRITE ENABLE	1/45	L	1	0
EEPROM_WRITE_CTR	EEPROM WRITE COUNTER	1/45	L	1	0
EE_PARITY	EE PARITY STATUS	1/45	L	1	0
EE_PARITY_CTR	EE PARITY COUNTER	1/45	L	1	0
EE_PARITY_FAIL	EE PARITY FAILURE STATUS	1/45	L	1	0
EE_PARITY_FAIL_CTR	EE PARITY FAILURE COUNTER	1/45	L	1	0
EE_PARITY_FAIL_ST

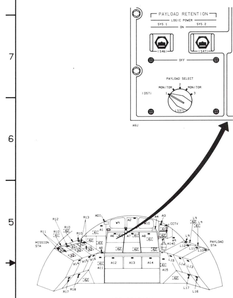

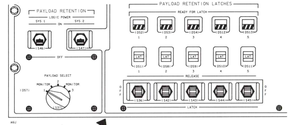

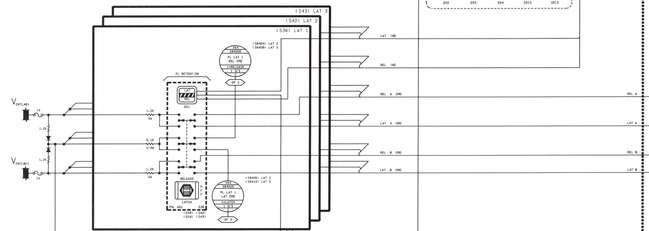

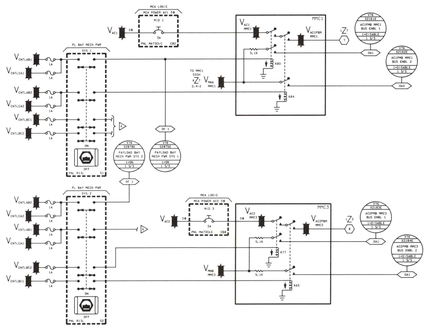

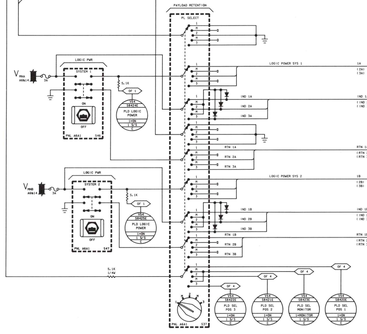

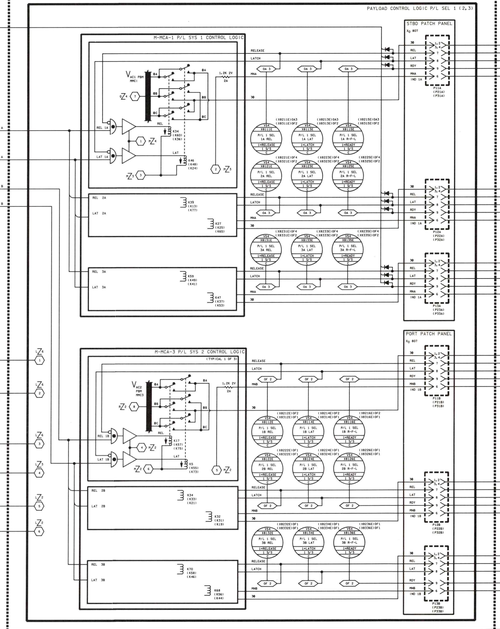

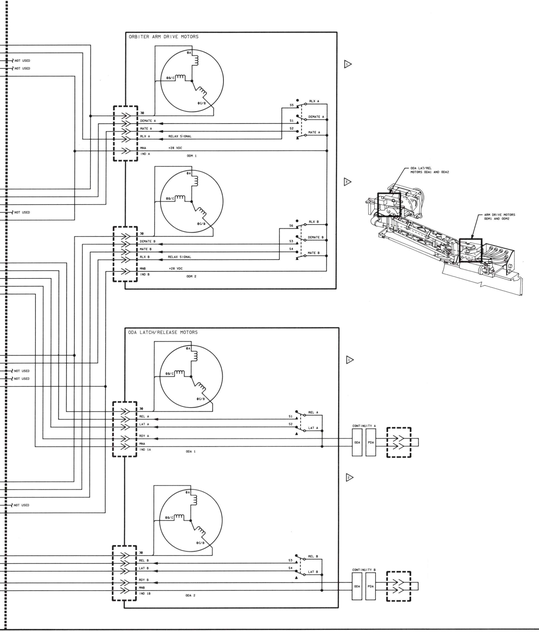

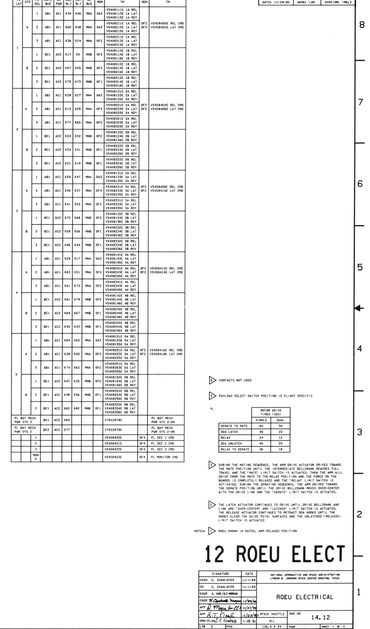

P	SYS	PL SEL	PL RET MECH	PL RET LATCH	PL RET RELEASE	PL RET DEPLOY	MDM	TB	MDM	TB
		1	A1	A1	A14	MA	MA	1B4A01A1 14 A1 1B4A01A2 14 A1		
	A	2	A1	A1	A15	MA	MA	1B4A01A1 14 B1 1B4A01A2 14 B1	AF1 AF2	4S4A04A2 REL 2ND 4S4A04A2 LAT 2ND
		3	A1	A1	A16	MA	MA	1B4A01A1 14 C1 1B4A01A2 14 C1		
1		1	B1	A2	A17	MA	MB	1B4A01A1 28 A1 1B4A01A2 28 A1		
	B	2	B1	A2	A18	MA	MB	1B4A01A1 28 B1 1B4A01A2 28 B1	AF3	4S4A04A1 REL 2ND
		3	B1	A2	A19	MA	MB	1B4A01A1 28 C1 1B4A01A2 28 C1		
		1	A1	A3	A20	MA	MA	1B4A02A1 14 A1 1B4A02A2 14 A1		
	A	2	A1	A3	A21	MA	MA	1B4A02A1 14 B1 1B4A02A2 14 B1	AF1 AF2	4S4A04A2 REL 2ND 4S4A04A2 LAT 2ND
		3	A1	A3	A22	MA	MA	1B4A02A1 14 C1 1B4A02A2 14 C1		
2		1	B1	A4	A23	MA	MB	1B4A02A1 28 A1 1B4A02A2 28 A1		
	B	2	B1	A4	A24	MA	MB	1B4A02A1 28 B1 1B4A02A2 28 B1	AF3	4S4A04A1 REL 2ND
		3	B1	A4	A25	MA	MB	1B4A02A1 28 C1 1B4A02A2 28 C1		
		1	A1	A5	A26	MA	MA	1B4A03A1 14 A1 1B4A03A2 14 A1		
	A	2	A1	A5	A27	MA	MA	1B4A03A1 14 B1 1B4A03A2 14 B1	AF1 AF2	4S4A04A2 REL 2ND 4S4A04A2 LAT 2ND
		3	A1	A5	A28	MA	MA	1B4A03A1 14 C1 1B4A03A2 14 C1		
3		1	B1	A6	A29	MA	MB	1B4A03A1 28 A1 1B4A03A2 28 A1		
	B	2	B1	A6	A30	MA	MB	1B4A03A1 28 B1 1B4A03A2 28 B1	AF3	4S4A04A1 REL 2ND
		3	B1	A6	A31	MA	MB	1B4A03A1 28 C1 1B4A03A2 28 C1		
		1	A1	A7	A32	MA	MA	1B4A04A1 14 A1 1B4A04A2 14 A1		
	A	2	A1	A7	A33	MA	MA	1B4A04A1 14 B1 1B4A04A2 14 B1	AF1 AF2	4S4A04A2 REL 2ND 4S4A04A2 LAT 2ND
		3	A1	A7	A34	MA	MA	1B4A04A1 14 C1 1B4A04A2 14 C1		
4		1	B1	A8	A35	MA	MB	1B4A04A1 28 A1 1B4A04A2 28 A1		
	B	2	B1	A8	A36	MA	MB	1B4A04A1 28 B1 1B4A04A2 28 B1	AF3	4S4A04A1 REL 2ND
		3	B1	A8	A37	MA	MB	1B4A04A1 28 C1 1B4A04A2 28 C1		
		1	A1	A9	A38	MA	MA	1B4A05A1 14 A1 1B4A05A2 14 A1		
	A	2	A1	A9	A39	MA	MA	1B4A05A1 14 B1 1B4A05A2 14 B1	AF1 AF2	4S4A04A2 REL 2ND 4S4A04A2 LAT 2ND
		3	A1	A9	A40	MA	MA	1B4A05A1 14 C1 1B4A05A2 14 C1		
5		1	B1	A10	A41	MA	MB	1B4A05A1 28 A1 1B4A05A2 28 A1		
	B	2	B1	A10	A42	MA	MB	1B4A05A1 28 B1 1B4A05A2 28 B1	AF3	4S4A04A1 REL 2ND
		3	B1	A10	A43	MA	MB	1B4A05A1 28 C1 1B4A05A2 28 C1		
		1	A1	A11	A44	MA	MA	1B4A06A1 14 A1 1B4A06A2 14 A1		
	A	2	A1	A11	A45	MA	MA	1B4A06A1 14 B1 1B4A06A2 14 B1	AF1 AF2	4S4A04A2 REL 2ND 4S4A04A2 LAT 2ND
		3	A1	A11	A46	MA	MA	1B4A06A1 14 C1 1B4A06A2 14 C1		
6		1	B1	A12	A47	MA	MB	1B4A06A1 28 A1 1B4A06A2 28 A1		
	B	2	B1	A12	A48	MA	MB	1B4A06A1 28 B1 1B4A06A2 28 B1	AF3	4S4A04A1 REL 2ND
		3	B1	A12	A49	MA	MB	1B4A06A1 28 C1 1B4A06A2 28 C1		
		1	A1	A13	A50	MA	MA	1B4A07A1 14 A1 1B4A07A2 14 A1		
	A	2	A1	A13	A51	MA	MA	1B4A07A1 14 B1 1B4A07A2 14 B1	AF1 AF2	4S4A04A2 REL 2ND 4S4A04A2 LAT 2ND
		3	A1	A13	A52	MA	MA	1B4A07A1 14 C1 1B4A07A2 14 C1		
7		1	B1	A14	A53	MA	MB	1B4A07A1 28 A1 1B4A07A2 28 A1		
	B	2	B1	A14	A54	MA	MB	1B4A07A1 28 B1 1B4A07A2 28 B1	AF3	4S4A04A1 REL 2ND
		3	B1	A14	A55	MA	MB	1B4A07A1 28 C1 1B4A07A2 28 C1		
		1	A1	A15	A56	MA	MA	1B4A08A1 14 A1 1B4A08A2 14 A1		
	A	2	A1	A15	A57	MA	MA	1B4A08A1 14 B1 1B4A08A2 14 B1	AF1 AF2	4S4A04A2 REL 2ND 4S4A04A2 LAT 2ND
		3	A1	A15	A58	MA	MA	1B4A08A1 14 C1 1B4A08A2 14 C1		
8		1	B1	A16	A59	MA	MB	1B4A08A1 28 A1 1B4A08A2 28 A1		
	B	2	B1	A16	A60	MA	MB	1B4A08A1 28 B1 1B4A08A2 28 B1	AF3	4S4A04A1 REL 2ND
		3	B1	A16	A61	MA	MB	1B4A08A1 28 C1 1B4A08A2 28 C1		
PL RET MECH PWR			B11	A12	A62			4T6A03A2		PL RET MECH
PL RET MECH PWR SYS 2			B12	A13	A13			4T6A04A2	AF4	PL RET MECH PWR SYS 2 CNA
								4S4A04A2	AF4	PL SEL 1 CNA
								4S4A04A2	AF4	PL SEL 2 CNA
								4S4A04A2	AF4	PL SEL 3 CNA
								4S4A04A2	AF4	PL MAN TERM CNA

DEPLOY DRIVES (1B4A1-1A22)	
CONNECTS TO MDA	1A
MDA LATCH	2A
MDA RELEASE	3A
SDA RELEASE	4A
RELAYS TO CONNECTS	5A

RETRACT DRIVES (1B4A1-1A22)	
CONNECTS TO MDA	6A
MDA LATCH	7A
MDA RELEASE	8A
SDA RELEASE	9A
RELAYS TO CONNECTS	10A

DATE: 11/29/95	NAME: LAP	VERS:ORB OPS/3
DATE: 11/29/95	NAME: MFR	VERS:ORB OPS/3
DATE: 11/29/95	NAME: LAP	VERS:ORB OPS/3

CONTACTS NOT USED

PAYLOAD SELECT SWITCH POSITION IS PL1/AFT SPECIFIC

DURING THE MATING SEQUENCE, THE ARM DRIVE ACTUATOR DRIVES TOWARD THE MATE POSITION UNTIL THE EXTENDABLE MILLIONAIR SQUARES FULLY ENGAGE THE MATE TO THE PAYLOAD. THE ACTUATOR THEN BEGINS TO RETRACT, DRIVING THE MATE TO THE PAYLOAD PULL-IN POSITION. AS THE ACTUATOR RETRACTS, IT ALSO DRIVES THE ADM LATCH TO THE LATCHED POSITION. AFTER THE ACTUATOR IS RETRACTED, CAUSING THE SWITCH TO OPEN, THE ARM DRIVE MOTOR DRIVES THE CONNECTS POSITION UNTIL THE DRIVE MILLIONAIR PROVES OVER-CENTER WITH THE DRIVE LINK AND THE CONNECTS LIMIT SWITCH IS ACTUATED.

THE LATCH ACTUATOR CONTINUES TO DRIVE UNTIL DRIVE MILLIONAIR AND LATCH MILLIONAIR PROVE OVER-CENTER WITH THE LATCH LINK AND THE MILLIONAIR ACTUATORS ARE DRIVEN TO THEIR HARD LIMITS. THIS HARDS CLEAR THE GLOVE PETAL SURFACES AND THE UNLATCHED (RELEASED) LIMIT SWITCHES ACTUATED.

NOTES: ROEU SHOWN IN MATED, ARM RELEASED POSITION

12 ROEU ELECT

SIGNATURE	DATE
CDDR: L. EDWARDS	11/29/95
QA: L. EDWARDS	11/29/95
CHIEF, S&MA MGR/MMOD	
CHIEF, Mechanical Systems Engineering	11/29/95
CHIEF, Electrical Systems Engineering	11/29/95
CHIEF, Flight Systems Engineering	11/29/95
CHIEF, Mechanical Design	11/29/95
CHIEF, Electrical Design	11/29/95

MATERIAL APPROVED FOR PUBLIC DISTRIBUTION
THERE IS UNKNOWN EXPORT CONTROL RESTRICTION

ROEU ELECTRICAL

SPACE SHUTTLE	DWG NO
PROGRAM	14.12
SCALE: NONE	SHEET 1 OF 1

BASIC REV E

DATE: 11/15/82 NAMO: MFR VERSION: ORL1

ROEU CONFIGURATION

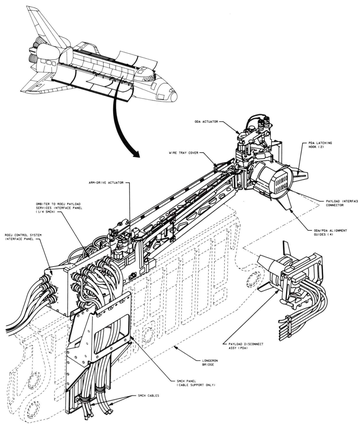

ROEU ORBITER INTERFACE - INBOARD FACE
DEPICTED POSITION

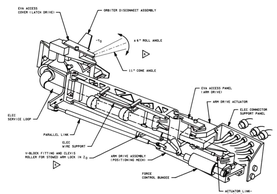

ORBITER ARM-DRIVE MECHANISM (-1DM) - OUTBOARD FACE
DEMATED POSITION

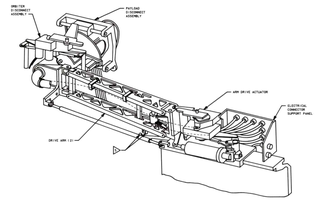

ORBITER ARM-DRIVE MECHANISM (-1DM) - OUTBOARD FACE
MATED AND LATCHED POSITION

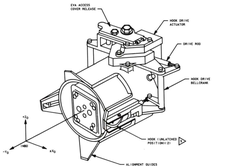

ORBITER DISCONNECT ASSEMBLY (-1DA1) ▷▷

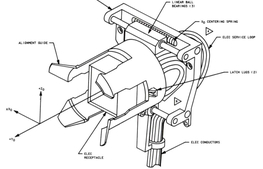

PAYLOAD DISCONNECT ASSEMBLY (-1PDA)

LATCHING OPERATIONS

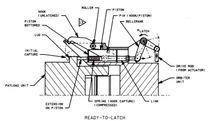

READY-TO-LATCH

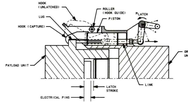

HOOK CAPTURE

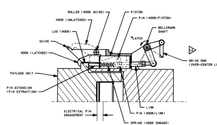

LATCHED POSITION

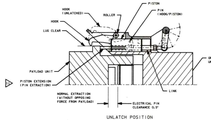

UNLATCH POSITION

ROEU ENVELOPE

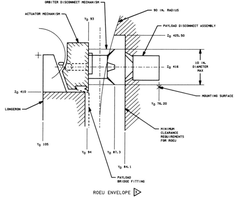

ROEU ENVELOPE ▷

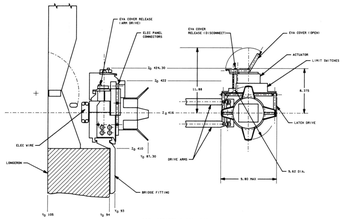

ROEU ORBITER DISCONNECT

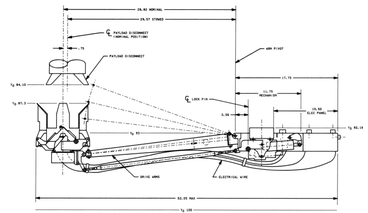

ROEU DEMATED (STOWED)
PLAN VIEW

1. A ROLLER HOLDER CONTROLS HOOK 4 CONTACT (3) IF THE P-STUB DEPENDED (-1), OR OPPOSITE (-2)HOOK ARE APPLIED FROM THE PAYLOAD SIDE OF THE SYSTEM

2. IN THE FULLY LATCHED POSITION, THE DRIVEN(-1)ARM OR (-2)HOOK ROLLER IS POSITIVELY RELATIVE TO THE ACTUATOR BELLCRANK

3. THE LATCHING SYSTEMS HAVE NO EXTENSION AT ONE END THAT PERMITS ANY HOOK OR THE PDA LUGS TO DETRACT THE PDA P/AS FROM THE SSA VALVES DURING THE RELEASE OPERATION

VOL	PROV WEIGHTS
ORB	74.75 LBS
PDA	35.00 LBS (-4/5)

4. THE LATCHING MECHANISM APPLIES A MINIMUM OF PULL-IN/PUSH-OUT FORCE FOR THE FINAL ENGAGEMENT/DISENGAGEMENT OF THE SSA AND PDA

5. THE SSA PROVIDES THE DUAL LATCHING MECHANISM (-1MOTOR) AND (-2)HOOK) THAT PERFORMS THE FINAL MATE AND INITIAL DEMATE FUNCTIONS. THE PDA PROVIDES THE LATCHING LUGS

6. THE SSA PROVIDES THE VALVES FOR THE ELECTRICAL (-1P/A) (-2)AL. THE PDA PROVIDES THE P/AS

7. THE SSA IS SUPPORTED BY A SPHERICAL BEARING WHICH ALLOWS FOR AN ANGULAR (CONE) MISS OF 11.7° MAXIMUM (HOOK ANGLE SELECTED) AND 11.7° ROLL ABOUT THE y_B CENTERLINE OF THE SSA

8. THE SSA IS PRESTROKED IN THE FULLY DEPARTED POSITION BY OVER-CENTER SPRING FORCE. THE SSA IS PRESTROKED TO THE FULLY LATCHED AND (-2)ELECTRICALLY MOTOR FOR THE y_B DIRECTION

9. THE PDA ALLOWS FOR A (-) DISPLACEMENT IN THE y_B AXIS BY MEANS OF A CENTERLINE SPRING

10. THE SSA ALLOWS FOR A MATING ENVELOPE OF 0.75" TOWARD THE SSA AND 0.50" AWAY FROM THE SSA WHEN THE y_B AXIS IS WITH RESPECT TO THE MATING PDA FACE PLANE

11. THE DRIVE MOTOR AND GEAR TRAIN ASSY FOR THE ARM-DRIVE MECHANISM APPLIES POWER AT THREE TO CONTACT AS FOR THE SSA AND PDA BY INTERLOCKING THE SSA AND PDA CONTROL ALIGNMENT GUIDES

NOTES: ▷ THE PDA CAN BE MOUNTED ON A STANDARD ORB/TDA BRIDGE AND CAN BE INSTALLED FACING FORWARD OR AFT. POSITION (-1 THE LEFT-HANDED ROEU AND POSITION (-2 THE RIGHT-HANDED ROEU.

12 ROEU MECH O/V 2

SIGNATURE	DATE
DOUG S. STAHLHUTH	11/15/82
DR. - R.L. TEDESCO	11/15/82
CHIEF ENGR. (S.S.PROGRAM)	11/15/82
CHIEF ENGR. (S.S.PROGRAM)	
APP. BY C. Rowe for BC Gordon	11/15/82
APP. BY C. Rowe	11/15/82
APP. BY C. Rowe	11/15/82

NATIONAL AERONAUTICS AND SPACE ADMINISTRATION
GEORGE C. MARSHALL SPACE FLIGHT CENTER, HUNTSVILLE, ALABAMA

REMOTELY OPERATED ELECTRICAL UMBILICAL MECHANICAL OVERVIEW

SIZE: A | DWG NO: 14.12

SCALE: NONE | WEIGHT: | SHEET 1 OF 1

DATE: 11/5/90 | NAME: MFB | VERSION: INAL1

DATE: 10/25/90 | NAME: MSU | VERSION: BPL2
DATE: 11/5/90 | NAME: MFB | VERSION: INAL1

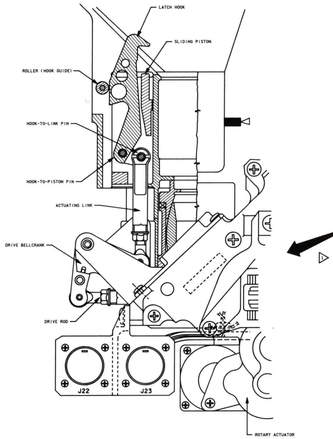

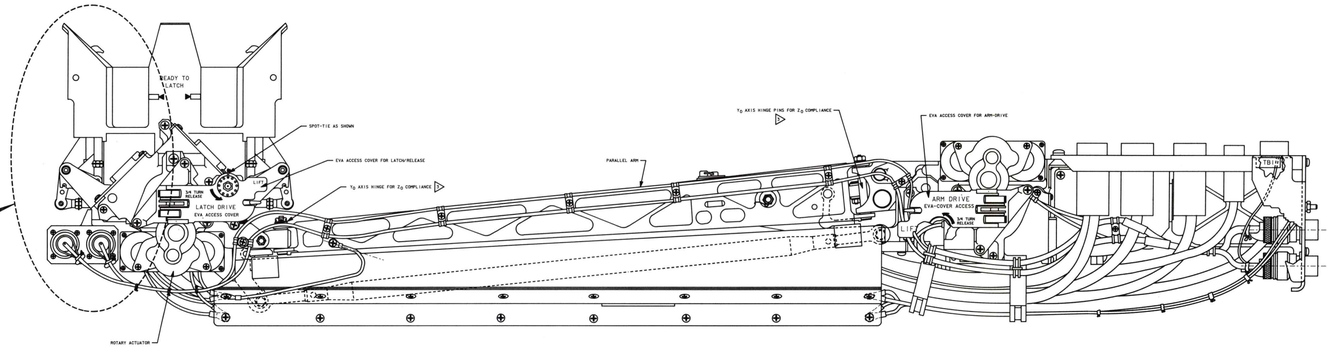

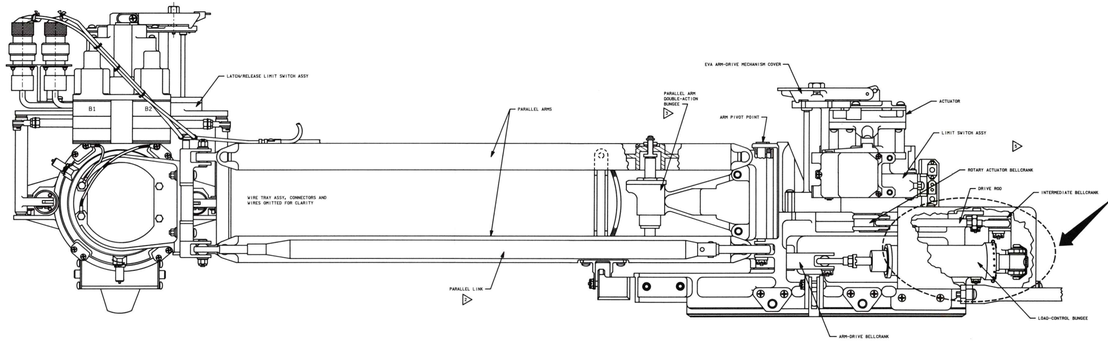

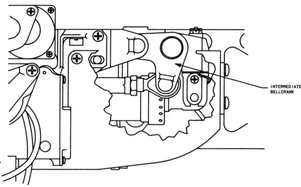

8. THE ROEU HAS 2 SEPARATE EVA INTERFACES TO ALLOW FOR EVA MATE/DEMATE AND LATCH/RELEASE, BOTH EVA INTERFACES OPERATE THE SAME. AFTER THE 5/16" HEX BOLT IS BACKED OUT ~3/4 TURN, THE COVER IS ROTATED ABOUT THE HINGE PINS UNTIL STOPS WILL HOLD IT. THIS MOTION DEPRESSES A SHAFT-SEAL TO DISENGAGE THE LOCKING MECHANISM. TO ALLOW FOR EVA OPERATION OF THE MECHANISM, A RATCHET LEVER IS MANUALLY MOVED TO THE DESIRED POSITION (STOW/MATE OR LATCH/RELEASE) AND THE 5/16" HEX DRIVE BOLT IS ROTATED TO THE DESIRED POSITION. THE COVER IS THEN ROTATED BACK TO THE NEUTRAL POSITION AND THE COVER IS CLOSED AND SECURED.

7. RELEASE OPERATION: AFTER THE LATCH HOOKS PULL THE ORA AND PDA TOGETHER, THE ARM-DRIVE MECHANISM IS DRIVEN THROUGH THE DONATE DIRECTION. THE INTERMEDIATE BELLCRANK ROTATES UNTIL THE COMPRESSION FORCE ON THE BUNGEE IS COMPLETELY RELEASED. AN INTERMEDIATE LIMIT SWITCH WILL STOP THE ACTUATOR. THIS POSITION IS DESIGNED TO BE AT THE POINT WHERE A MAXIMUM OF 5 LBF OR T_Q AXIS FORCE IS APPLIED TO THE PAYLOAD DUE TO SPRING FORCE.

6. DONATE-TO-MATE OPERATION: THE INITIAL ARM-DRIVE ACTUATOR ROTATION MOVES THE ACTUATOR BELLCRANK AND THE DRIVE LINK THROUGH THE OVER-CENTER LOCK POSITION RELATIVE TO THE ACTUATOR. THE ARM SHOULD NOT MOVE UNTIL THE PRELOAD ON THE BUNGEE IS TAKEN UP BY THE INTERMEDIATE BELLCRANK TRAVEL. THE BELLCRANK CONTINUES TO ROTATE AND COMPRESS THE BUNGEE UNTIL FULL TRAVEL OF THE INTERMEDIATE BELLCRANK ACTUATES THE MATE LIMIT SWITCH

▷ ARM-DRIVE MECHANISM: THE ROTARY ACTUATOR IS ATTACHED TO A PARALLEL ARM WHICH IS ATTACHED TO THE ARM-DRIVE INTERMEDIATE BELLCRANK WHICH ATTACHES TO A LOAD-CONTROL SPRING CARTRIDGE (BUNGEE). THE BUNGEE IS ATTACHED TO THE ARM-DRIVE BELLCRANK

4. IN THE STOWED POSITION, THE DRIVE ROD IS AT AN OVER-CENTER LOCK POSITION RELATIVE TO THE ACTUATOR BELLCRANK AND THE BUNGEE IS IN TENSION

▷ THE DOM ALLOWS FOR THERMAL AND STRUCTURAL DISTORTIONS WHILE MATED IN THE Z_D AXIS OF ± 1" BY MEANS OF Y_D HINGE PINS AT BOTH ENDS OF THE PARALLEL ARMS. A DOUBLE-ACTION SPRING CARTRIDGE (BUNGEE) IS USED TO MAINTAIN THE NORMAL CENTERLINE POSITION

▷ THE PARALLEL LINK ON THE DRIVE ARM MAINTAINS THE CENTERLINE OF THE ORA NORMAL TO THE Y_D AND Z_D PLANE AS THE POSITIONING ARM DRIVES TO THE MATE/DEMATE POSITION

NOTES: ▷ LATCHING MECHANISM: THE ORA HOOK MECHANISM CONSISTS OF A PAIR OF OPPOSING HOOKS. THE HOOKS ARE CONNECTED TO SLIDING PISTONS WHICH ARE DRIVEN BY DRIVE RODS CONNECTED TO A COMMON ACTUATOR BELLCRANK. THE PISTONS ARE SPRING LOADED TO THE LATCH POSITION AND APPLY A FORCE TO ANOTHER BELLCRANK THAT ROTATES THE DRIVE ROD AND ACTUATING LINK. THIS CREATES A MOMENT ABOUT THE HOOK/LINK PINS AND TENDS TO CHARGE THE HOOKS. THE LINKS ARE CONNECTED TO DRIVE BELLCRANKS WHICH ARE DRIVEN BY DRIVE RODS CONNECTED TO A COMMON ACTUATOR BELLCRANK

12 ROEU MECH 3

SIGNATURE	DATE	NATIONAL AERONAUTICS AND SPACE ADMINISTRATION LYNDON B. JOHNSON SPACE CENTER HOUSTON, TEXAS
DSGN: VICKI S. HUNTER	10/5/90	
DR		ROEU MECHANICAL
CHKR: A. CARLISLE-MORGAN		
CHKR:		
APP:		DWG NO
APP:		14, 12
DWG PLAN:	ALL	
LTR E	PCN	83,5 X 34 SHEET 3 OF 3

BASIC REV E

FOR DETAILED COMPONENT AND LOGIC INFORMATION REFER TO:

SSSH DWG NO.	SSSH DWG TITLE	VENDOR NAME	VENDOR DWG NO.	VENDOR SHEET NO.	REV	DATE	VENDOR DRAWING TITLE
14.1 (SHEET 1)	PAYLOAD BAY DOORS/ RADIATOR OVERVIEW	ROCKWELL	VO70-370002	ALL	H	9/17/87	PAYLOAD BAY DOORS ASSY-COMPLETE
			VO70-594125	ALL	D	3/5/80	ACTUATION MECHANISM INSTALLATION, PAYLOAD BAY DOOR
			VO70-594126	ALL	-	7/28/78	BELLCRANK - ACTUATING MECHANISM, PAYLOAD BAY DOOR, ASSY OF
			VO70-594145	ALL	-	12/26/83	UPPER ROD INSTL - ACTUATION MECHANISM, PAYLOAD BAY DOOR
			VO70-594160	ALL	C	8/20/82	FWD LATCHING MECHANISM INSTALLATION - PAYLOAD BAY DOOR
			VO70-594185	ALL	D	2/22/83	FWD LATCHING MECHANISM INSTALLATION - BULKHEAD, PAYLOAD BAY DOOR
			VO70-594222	ALL	A	8/5/82	SWITCH MODULE, PAYLOAD BAY DOOR, ASSY
			VO70-594260	ALL	D	8/31/82	AFT LATCHING MECHANISM INSTALLATION - PAYLOAD BAY DOOR
			VO70-594263	ALL	A	3/12/80	BELLCRANK - ACTUATING LATCH NO. 2, AFT LATCHING MECH, PAYLOAD BAY DOOR, ASSY OF
			VO70-594265	ALL	A	4/3/80	BELLCRANK, ACTUATING, LATCH NO. 3, AFT LATCHING MECH, PAYLOAD BAY DOOR, ASSY OF
			VO70-594276	ALL	A	3/6/80	BELLCRANK-LOCKING, LATCH NO. 1, AFT LATCHING MECH, PAYLOAD BAY DOOR, ASSY OF
			VO70-594281	ALL	A	1/17/80	BELLCRANK, LOCKING, LATCH 1 FWD LATCHING MECHANISM PAYLOAD BAY DOOR, ASSY OF
			VO70-594285	ALL	D	8/9/82	AFT LATCHING MECHANISM INSTL., BULKHEAD-PAYLOAD BAY DOOR
			VO70-594302	ALL	-	9/15/76	SHEAR FITTING ASSY - CENTERLINE LATCHING MECHANISM, PAYLOAD BAY DOOR
			VO70-594330	ALL	B	9/8/82	HANGER ASSY - LATCH, CENTERLINE LATCHING MECHANISM, PAYLOAD BAY DOOR
			VO70-594360	ALL	E	8/16/82	CENTERLINE LATCHING MECHANISM INSTALLATION - PAYLOAD BAY DOORS
			VO70-594400	ALL	A	4/28/80	DEPLOYMENT INSTALLATION, RADIATOR MECHANISM
			VO70-594401	ALL	-	3/23/84	LINK INSTALLATION - RADIATOR DEPLOYMENT
			VO70-594450	ALL	A	2/7/80	LATCH MECHANISM INSTALLATION - RADIATOR
14.1 (SHEET 2)	PL BAY DOOR LATCH CLEAR TO OPEN/CLOSE INDICATIONS	ROCKWELL	VO70-362003	ALL	D	1/17/86	MARKING-PAYLOAD BAY INTERIOR, INSTALLATION

DWG	SIGNATURE	DATE	DWG	SIGNATURE	DATE
14.1-1,2	ENGR J. PEJZA			ENGR	
	ENGR Janet Y. Pejza	10/23/90		ENGR	
	ENGR			ENGR	
	ENGR			ENGR	
	ENGR			APP Ralf Ge	2 Nov 90
	ENGR			APP R Neal	11/15/90
	ENGR			OMNIPLAN	
	ENGR			LTR E PCN	

NATIONAL AERONAUTICS AND SPACE ADMINISTRATION
LYNDON B. JOHNSON SPACE CENTER HOUSTON, TEXAS

VENDOR DRAWING REFERENCES

SPACE SHUTTLE ALL | TBL NO 14-I | PAGE 14.I-1 | SHEET 1 OF 11

BASIC REV E

FOR DETAILED COMPONENT AND LOGIC INFORMATION REFER TO:

SSSH DWG NO.	SSSH DWG TITLE	VENDOR NAME	VENDOR DWG NO.	VENDOR SHEET NO.	REV	DATE	VENDOR DRAWING TITLE
14.1 (SHEET 3)	RADIATORS DEPLOY/ STOW	ROCKWELL	VS70-590402	ALL	G	3/12/83	SCHEMATIC DIAGRAM - FREON RADIATOR DEPLOYMENT SUBSYSTEM (OV-102)
			VS70-590409	ALL	A	7/9/81	SCHEMATIC DIAGRAM - FREON RADIATOR DEPLOYMENT SUBSYSTEM (OV-103 & SUBS)
			VS70-760702	ALL	H	8/15/86	SCHEMATIC DIAGRAM - MOTOR CONTROL ASSY POWER DISTRIBUTION (OV-102)
			VS70-760709	ALL	D	8/15/86	SCHEMATIC DIAGRAM - MOTOR CONTROL ASSY POWER DISTRIBUTION (OV-103 & SUBS)
14.2 (SHEET 1)	PLBD OPEN/CLOSE H/W OVERVIEW	ROCKWELL	VS70-540302	ALL	J	6/25/86	SCHEMATIC DIAGRAM - PAYLOAD BAY DOOR CONTS SUBSYSTEM (OV-102)
			VS70-540309	ALL	E	6/20/86	SCHEMATIC DIAGRAM - PAYLOAD BAY DOOR CONTS SUBSYSTEM (OV-103 & SUBS)
			VS70-760702	ALL	H	8/15/86	SCHEMATIC DIAGRAM - MOTOR CONTROL ASSY POWER DISTRIBUTION (OV-102)
			VS70-760709	ALL	D	8/15/86	SCHEMATIC DIAGRAM - MOTOR CONTROL ASSY POWER DISTRIBUTION (OV-103 & SUBS)
14.2 (SHEET 2)	PLBD SOFTWARE OVERVIEW (PASS AND BFS	IBM	SS-P-0002-580G	PAYLOAD BAY DOOR SEQUENCE	G		SPACE SHUTTLE PROGRAM ORBITER PROJECT COMPUTER PROGRAM DEVELOPMENT SPECIFICATION, VOLUME V, BOOK 8: SYSTEMS MANAGEMENT LEVEL B SOFTWARE REQUIREMENTS
		ROCKWELL	MG038101	PAYLOAD BAY DOOR SEQUENCE	L	10/14/88	BFS PROGRAM REQUIREMENTS DOCUMENT
		IBM	OF350100. APPL. SSBPLBAY. LIT. T7314212	ALL		11/10/87	PAYLOAD BAY DOOR HAL CODE
		IBM	NAS 9-16920	PAYLOAD BAY DOOR SEQUENCE	1	9/9/87	SPACE SHUTTLE PROGRAMS ORBITER AVIONICS SOFTWARE OPERATIONAL DETAILED DESIGN SPECIFICATION VOL III PART 2 SM
14.3 (SHEET 1)	PAYLOAD RETENTION LATCH ELECTRICAL	R.I.	VS70 764412	2,4,5,6	G	9/17/82	SCHEMATIC DIAGRAM - MID MOTOR CONT ASSY NO. 1 RIGHT FWD MID FUSELAGE
			VS70-760702	ALL	H	8/15/86	SCHEMATIC DIAGRAM MOTOR CONTROL ASSY POWER DISTRIBUTION
			VS70-733199	1 AND 2	C	9/30/86	SCHEMATIC DIAGRAM D&C PANEL R13A2 RIGHT HAND CONSOLE
			VS70-733709	4	D	5/10/84	SCHEMATIC DIAGRAM PANEL A6A1 AFT ON ORBIT STA
			VS70-733897	1 AND 2	B	5/8/85	SCHEMATIC DIAGRAM D&C PANEL MA73C MID DECK BAY 3B
			VS70-540229	1 - 4	C	4/1/85	SCHEMATIC DIAGRAM PAYLOAD RETENTION SUBSYS (STS-23)
			VS70-540202	1 - 17	J	10/30/86	SCHEMATIC DIAGRAM PAYLOAD RETENTION SUBSYSTEM

DWG	SIGNATURE	DATE	DWG	SIGNATURE	DATE
14.1-3	ENGR J. PEJZA			ENGR	
	ENGR Janet Y. Pejza	10/23/90		ENGR	
14.2-1, 2	ENGR J. PEJZA			ENGR	
	ENGR Janet Y. Pejza	10/23/90		ENGR	
14.3-1	ENGR J. OLANSEN			APP Robert Falk	2 Nov 90
	ENGR J. Olansen	11/23/90		APP R18 Leal	11/15/90
	ENGR			OMNIPLAN	
	ENGR			LTR E PCN	

NATIONAL AERONAUTICS AND SPACE ADMINISTRATION
LYNDON B. JOHNSON SPACE CENTER HOUSTON, TEXAS

VENDOR DRAWING REFERENCES

SPACE SHUTTLE | TBL NO 14-I
ALL

BASIC REV E

FOR DETAILED COMPONENT AND LOGIC INFORMATION REFER TO:

SSSH DWG NO.	SSSH DWG TITLE	VENDOR NAME	VENDOR DWG NO.	VENDOR SHEET NO.	REV	DATE	VENDOR DRAWING TITLE
14.3 (SHEET 2)	PAYLOAD RETENTION LATCH - MECH	R. I.	V073-340101	1	A	6/29/82	FITTING - LONGERON BRIDGE, X0 636.00 TO X0 693.00, MID FUSELAGE, ASSY OF
			V073-544100	1	-	2/28/84	LATCH ASSY - LIGHTWEIGHT LONGERON ((COMPLETE)
			V073-544210	1	-	7/27/83	GEARBOX ASSEMBLY - MECHANISM DRIVE, LIGHTWEIGHT LONGERON LATCH
			V073-544230	1	-	4/18/84	LATCH ASSY - MIDDLEWEIGHT LONGERON COMPLETE
			V073-544300	1	A	12/14/84	LATCH ASSEMBLY - KEEL, LIGHTWEIGHT
			VO73-544100	1 - 4	-	4/20/83	DESIGN LAYOUT - LIGHT WT LONGERON RETENTION LATCH
			V073-340330	1 AND 2	-	9/15/82	BRIDGE FITTING - KEEL LT WT. BAY NO 2 ASSY OF
			V073-544110	1 - 3	-	8/12/83	FRAME SET - LIGHTWEIGHT LONGERON LATCH, ASSEMBLY
			V073-544221	1	-	3/1/83	GUIDE - EXTENDED LIGHTWEIGHT LONGERON LATCH
			V073-544227	1 - 3	A	12/7/84	FRAME - MIDDLEWEIGHT LONGERON LATCH ASSY
			V073-544302	1	A	1/23/85	GUIDE, SHORT END FINISHED
			V073-544552	1 AND 2	A	10/10/88	GUIDE ASSY - 18 INCH, SHORT END, PRLA
			V073-544301	1	-	2/5/81	GUIDE, LONG END FINISHED
			V073-544302	1	A	1/23/88	GUIDE, SHORT END FINISHED
			V073-544580	1	-	2/84	GUIDE ASSY - SHORT END, PRLA
			V776-544600	1	-	3/15/84	LATCH ASSEMBLY - MODIFIED MIDDLE WEIGHT (COMPLETE)
			V073-544240	1 AND 2	-	4/27/84	GUIDE ASSY - LIGHTWEIGHT LONGERON LATCH
14.3 (SHEET 3)	PROTECTIVE COVER REMOVAL SYSTEM	R.I.	V739-290001	1 AND 2	A	4/4/90	SCHEMATIC DIAGRAM MISSION KIT PROTECTIVE COVER REMOVAL SYSTEM
		R.I.	V739-544021	2,4	-	11/8/89	LANYARD DETAIL ASSEMBLY
		R.I.	V739-544002	1	-	7/24/89	PROTECTIVE COVER REMOVAL SYSTEM-MECHANICAL INSTL
		R.I.	V739-544001	1	-	3/15/89	ACTUATOR MECHANISM - ASSY OF, PROTECTIVE COVER REMOVAL MECHANISM
		SANDIA	R25746	1	A	5/11/90	AAOU SUNSHADES SOFT COVER / (INFLIGHT)
			R25747	1	A	5/11/90	ADVY SUNSHADES SOFT COVER / (INFLIGHT)

DWG	SIGNATURE	DATE	DWG	SIGNATURE	DATE
14.3-2,3	ENGR J. OLANSEN			ENGR	
	ENGR J. Olansen	10/23/90		ENGR	
	ENGR			ENGR	
	ENGR			ENGR	
	ENGR			APP Paul F. Dye	2 Nov 90
	ENGR			APP R. I. Neal	11/15/90
	ENGR			OMNIPLAN	
	ENGR			LTR E	PCN

NATIONAL AERONAUTICS AND SPACE ADMINISTRATION
LYNDON B. JOHNSON SPACE CENTER HOUSTON, TEXAS

VENDOR DRAWING REFERENCES

SPACE SHUTTLE | TBL NO 14-I
ALL

BASIC REV E

FOR DETAILED COMPONENT AND LOGIC INFORMATION REFER TO:

SSSH DWG NO.	SSSH DWG TITLE	VENDOR NAME	VENDOR DWG NO.	VENDOR SHEET NO.	REV	DATE	VENDOR DRAWING TITLE
14.4 (SHEET 1)	RMS D&C PANEL	CAE	ED85511.01. 1.300	1-3	E	1/79	POWER AND GROUNDING SRMS D&C SUBSYSTEM
		CAE	ED87300.01. 1.268	1-2	C	5/82	PRINTED WIRING ASSEMBLY DISCRETE INPUT/OUTPUT
		CAE	ED87305.01. 1.268	1-2	D	5/82	CIRCUIT CARD ASSEMBLY MCIU INTERFACE AND ADDRESS DECODER
		CAE	ED87310.01. 1.268	1	B	5/82	PRINTED WIRING ASSEMBLY NUMERIC READ OUT DRIVE
		CAE	ED87315.01. 1.268	1	A	10/78	CIRCUIT CARD ASSEMBLY D/A CONVERTER A1
		CAE	ED87325.51. 1.268	1	D	11/77	PRINTED WIRING BOARD HAND CONTROLLER DEMOD INTERFACE
		CAE	ED87775.01. 1.835	1	B	2/80	TRANSLATION HAND CONTROLLER (THC) A2A2
		CAE	ED87899.51. 1.840	1	B	6/77	CIRCUIT CARD ASSEMBLY R.H.C. & T.H.C. OSCILLATOR CIRCUIT
		CAE	ED92020.01. 1.834	1-7	C	5/82	SRMS D&C SUBSYSTEM
		CAE	ED94385.01. 1.268	1	C	5/82	CIRCUIT CARD ASSEMBLY MASTER ALARM & HARD WIRED SWITCHING CIRCUIT
		CAE	ED96400.01. 1.268	1	C	1/81	CIRCUIT CARD ASSEMBLY MONITOR A1A2A6
		CAE	ED96402.01. 1.268	1-3	C	8/79	CIRCUIT CARD ASSEMBLY INTERFACE A1A2A2
		CAE	ED96404.01. 1.268	1-2	A	6/81	CIRCUIT CARD ASSEMBLY D&C PROTECTION A1A2A8
		NASA	SIE33103307	1	-	3/84	WIRING DIAGRAM RMS D&C IFM

DWG	SIGNATURE	DATE	DWG	SIGNATURE	DATE
14.4-1	ENGR A. MAGH			ENGR	
	ENGR Alberto J. Magh	10-26-90		ENGR	
	ENGR			ENGR	
	ENGR			ENGR	
	ENGR			APP Ernest Smith	11-14-90
	ENGR			APP [illegible]	11/15/90
	ENGR			OMNIPLAN	
	ENGR			LTR E PCN	

NATIONAL AERONAUTICS AND SPACE ADMINISTRATION
LYNDON B. JOHNSON SPACE CENTER HOUSTON, TEXAS

VENDOR DRAWING REFERENCES

SPACE SHUTTLE | TBL NO 14-I
ALL

BASIC REV E

FOR DETAILED COMPONENT AND LOGIC INFORMATION REFER TO:

SSSH DWG NO.	SSSH DWG TITLE	VENDOR NAME	VENDOR DWG NO.	VENDOR SHEET NO.	REV	DATE	VENDOR DRAWING TITLE
14.4 (SHEET 2)	RMS MCIU	SPAR	2563740	1 OF 1	6A	2/10/78	CONDITIONER, POWER MANIPULATOR CONTROLLER SCHEMATIC DIAGRAM
			2563743	1 AND 2	-	1/30/78	INTERFACE UNIT, MANIPULATOR CONTROLLER SCHEMATIC DIAGRAM
			2563749	1 OF 1	-	1/30/78	INTERFACE UNIT, MANIPULATOR CONTROLLER BLOCK DIAGRAM
			2563751	1 OF 1	7	1/25/78	DETECTOR, FAILURE SCHEMATIC DIAGRAM
			2563752	1 OF 1	3	1/25/78	INTERFACE, ANALOG SCHEMATIC DIAGRAM
			2563754	1 OF 1	9	7/1/78	INTERFACE, COMPUTER SCHEMATIC DIAGRAM
			2563755	1 OF 1	3	1/19/78	INTERFACE, DIGITAL SCHEMATIC DIAGRAM
			2563756	1 AND 2	24	2/10/78	MEMORY, COMPUTER SCHMATIC DIAGRAM
			2567757	1 OF 1	-	2/10/78	COMPUTER, MICROPROCESSOR SCHEMATIC DIAGRAM
14.4 (SHEET 3)	RMS SPA	SPAR	2558977	1/1	2	7-81	GENERATOR, PULSE-WIDTH MODULATOR
			2563712	1/1	1	7-78	ELECTRONICS SUB-ASSY. PWR SWITCH
			2563717	1 AND 2/2	7B	11-82	CONTROLLER, PWR SIGNAL
			2563718	1/1	3	4-81	LIMITER, CURRENT
			2563719	1/1	5	6-81	DRIVER, INDUCTOSYN TIMER
			2563721	1/1	3A	11-82	COMPARATOR, RATE
			2563722	1/FIN	3A	11-82	INTERFACE ELECTRONICS
			2563723	1/1	5	3-82	ENCODER, PHASE LOCKED LOOP
			51140E2120	1/1	P	9-84	ENCODER, JOINT
			51140E2121	1/2	P	9-84	JOINT, COMMUTATOR SCANNER ASSY.
14.4 (SHEET 4)	RMS BDA	SPAR	2559029	1/FIN	2	4-81	PROCESSOR, ANALOG
		SPAR	2559039	1/1	0	10-82	GENERATOR, PULSE-WIDTH MODULATOR
		SPAR	2559044	1 AND 2/2	7	4-81	CONTROLLER, POWER CONDITIONER
		SPAR	2563712	1/1	1	7-78	ELECTRONICS SUB-ASSY. PWR SWITCH
		SPAR	2563735	1/1	OA	11-82	AMPLIFIER, BACKUP DRIVE
		SPAR	2563737	1/FIN	OB	10-82	CONTROLLER, PWR SIGNAL
		SPAR	2563739	1/1	7	8-78	CONVERTER, POWER
		SPAR	51140E2121	2/2	P	9-84	JOINT, COMMUTATOR SCANNER ASSY
		CAE	ED92020	1-3/7	B	6-80	SRMS D&C SUBSYSTEM
14.4 (SHEET 5)	RMS CONTROL SYSTEM (EEEU AND MOTOR CONTROL)	SPAR	2559082		2A	7/81	POWER CONDITIONER SUBASSEMBLY
			2563764		5B	12/81	EE ELECTRONIC UNIT SCHEMATIC DIAGRAM
			2563765		5B	12/81	COMMAND AND COMMUTATION LOGIC SCHEMATIC DIAGRAM
			2571253-5501			10/82	POWER CONDITIONER

DWG	SIGNATURE	DATE	DWG	SIGNATURE	DATE
14.4-2	ENGR S. FERRARA		14.4-5	ENGR D. GOODWIN	
	ENGR L. Ferrara	10/26/90		ENGR Daniel Goodwin	11/2/90
14.4-3,4	ENGR A. LEE			ENGR	
	ENGR Albert J. Lee	10-26-90		ENGR	
	ENGR			APP Ernest Smith	11/14/90
	ENGR			APP [illegible]	11/15/90
	ENGR			OMNIPLAN	
	ENGR			LTR E PCN	

NATIONAL AERONAUTICS AND SPACE ADMINISTRATION
LYNDON B. JOHNSON SPACE CENTER HOUSTON, TEXAS

VENDOR DRAWING REFERENCES

SPACE SHUTTLE	TBL NO 14-I	
ALL	PAGE 14.I-5	SHEET 5 OF 11

BASIC REV E

FOR DETAILED COMPONENT AND LOGIC INFORMATION REFER TO:

SSSH DWG NO.	SSSH DWG TITLE	VENDOR NAME	VENDOR DWG NO.	VENDOR SHEET NO.	REV	DATE	VENDOR DRAWING TITLE
14.4 (SHEET 5) (CONC'D)		SPAR	2571253-5502			10/82	EEEU FUNCTIONAL DIAGRAM
			2572811-			10/82	POWER CONDITIONER CONTROLLER
			2572811-5501			10/82	POWER CONDITIONER CONTROLLER
			2572980-5502			10/82	COMMAND AND COMMUTATION LOGIC, FUNCTIONAL DIAGRAM
			2578223			10/82	MCIU SOFTWARE DOCUMENTATION
14.4 (SHEET 6)	RMS THERMOSTAT/ HEATER ELEMENTS	SPAR	SPAR-RMS-M-1140-1		2	5/2/83	INTERMEDIATE MAINTENANCE MANUAL, MANIPULATOR ARM
		SPAR	SPAR-RMS-M-1140-3		1	5/30/83	DEPOT, REPAIR, AND OVERHAUL MANUAL ELBOW JOINT SRU
		SPAR	SPAR-RMS-M-1140-4			2/28/83	DEPOT, REPAIR, AND OVERHAUL MANUAL, SHOULDER JOINT SRU
		SPAR	SPAR-RMS-M-1140-7			10/25/83	DEPOT, REPAIR, AND OVERHAUL MANUAL, END EFFECTOR LRU
		R.I.	VS72-956099 56NA		A	11/22/85	ELECTRICAL SCHEMATIC, REMOTE MANIPULATOR ARM
		R.I.	VS72-956102 56NA		E	6/9/86	ELECTRICAL SCHEMATIC, REMOTE MANIPULATOR ARM
14.4 (SHEET 7)	RMS MECHANICAL OVERVIEW	SPAR	RMS-M-1140-3-052	1		5/83	ELBOW JOINT MECHANICAL ASSEMBLY
		SPAR	RMS-M-1140-3-053	2		5/83	ELBOW JOINT MECHANICAL ASSEMBLY
		SPAR	RMS-M-1140-3-054	3		5/83	ELBOW JOINT MECHANICAL ASSEMBLY
		SPAR	RMS-M-1140-3-055			5/83	ELBOW JOINT G1 GEARBOX
		SPAR	RMS-M-1140-1-004			5/83	MANIPULATOR ARM OVERALL DIMENSIONS
		SPAR	RMS-M-1140-2-001			3/82	JOINT MOTOR MODULE FRONT/PIECE
		SPAR	RMS-M-1140-2-002			3/82	MAIN COMPONENTS OF TYPICAL JOINT MOTOR MODULE
		SPAR	RMS-M-1140-2-018			3/82	MOTOR MODULE ASSEMBLY
		SPAR	RMS-M-1140-3-003			5/83	ELBOW JOINT OVERALL DIMENSIONS
		SPAR	RMS-M-1140-3-004			5/83	ELBOW JOINT MAJOR COMPONENTS (PORT VIEW)
		SPAR	RMS-M-1140-3-005			5/83	ELBOW JOINT MAJOR COMPONENTS (STARBOARD VIEW)
		SPAR	RMS-M-1140-3-026			5/83	ASSEMBLY OF POSITION ENCODER
		SPAR	RMS-M-1140-3-050			5/83	ELBOW JOINT SRU
		SPAR	RMS-M-1140-4-014	2 OF 6		2/83	SHOULDER JOINT SRU

DWG	SIGNATURE	DATE	DWG	SIGNATURE	DATE
14.4-5	ENGR D. GOODWIN			ENGR	
	ENGR D. Goodwin	11/2/90		ENGR	
14.4-6	ENGR D. CULP			ENGR	
	ENGR DRCulp	10-26-90		ENGR	
14.4-7	ENGR J. HUGHES			APP Ernest Smith	11-14-90
	ENGR JM Hughes	11/2/90		APP [illegible]	11/15/90
	ENGR			OMNIPLAN	
	ENGR			LTR E	PCN

NATIONAL AERONAUTICS AND SPACE ADMINISTRATION
LYNDON B. JOHNSON SPACE CENTER HOUSTON, TEXAS

VENDOR DRAWING REFERENCES

SPACE SHUTTLE | TBL NO 14-I
ALL

BASIC REV E

FOR DETAILED COMPONENT AND LOGIC INFORMATION REFER TO:

SSSH DWG NO.	SSSH DWG TITLE	VENDOR NAME	VENDOR DWG NO.	VENDOR SHEET NO.	REV	DATE	VENDOR DRAWING TITLE
14.4 (SHEET 7) (CONC'D)		SPAR	RMS-M-1140-4-041			2/83	SHOULDER JOINT OVERALL DIMENSIONS
		SPAR	RMS-M-1140-4-042			2/83	SHOULDER JOINT (PORT VIEW)
		SPAR	RMS-M-1140-4-049			2/83	SECTIONAL VIEW OF SHOULDER YAW ASSEMBLY
		SPAR	RMS-M-1140-5-002			5/84	WRIST JOINT (PORT VIEW)
		SPAR	RMS-M-1140-5-023	1		5/84	WRIST PITCH/YAW ASSEMBLY
		SPAR	RMS-M-1140-5-024	2		5/84	WRIST PITCH/YAW ASSEMBLY
		SPAR	RMS-M-1140-5-025	3		5/84	WRIST PITCH/YAW ASSEMBLY
		SPAR	RMS-M-1140-5-026	4		5/84	WRIST PITCH/YAW ASSEMBLY
		SPAR	RMS-M-1140-5-032	1		5/84	WRIST ROLL ASSEMBLY
		SPAR	RMS-M-1140-5-033	2		5/84	WRIST ROLL ASSEMBLY
		SPAR	RMS-M-1140-5-035			5/84	WRIST G1 DRIVE ASSEMBLY
		SPAR	RMS-M-1140-7-024			1/85	END EFFECTOR MAJOR COMPONENTS
		SPAR	RMS-M-1140-7-026			1/85	END EFFECTOR SNARE AND RIGIDIZE GEAR TRAIN
		SPAR	31140-D-456			7/78	PRECAPTURE MISALIGNMENT ENVELOPE
		SPAR	GRS-0046				7/87ELBOW JOINT GEAR TRAIN
		SPAR	RMS ICD 17, F, FIG 3-3		F	6/82	CCTV AND LIGHT DESIGN CONFIGURATION
		NASA	FIG. 3.1.2.1.3-1	2 AND 3		1/88	ON-ORBIT DEPLOYMENT/RETRIEVAL CLEARANCES SHUTTLE ORBITER/CARGO STANDARD INTERFACES (ICD 2-19001, VOL XIV, ATT 1)
		NASA	FIG. 3.1.2.1.4-1	7 OF 8		1/88	PAYLOAD CLEARANCE ENVELOPE INTRUSIONS SHUTTLE ORBITER/CARGO STANDARD INTERFACES (ICD 2-19001, VOL XIV, ATT 1)
14.4 (SHEET 8)	RMS ELEC OV	ROCKWELL	VS70-540552	1-5	B	11/30/85	SCHEMATIC DIAGRAM - REMOTE MANIPULATOR ARM SUBSYSTEM
			VS70-540559	1-5	-	1/31/84	SCHEMATIC DIAGRAM - REMOTE MANIPULATOR ARM SUBSYSTEM
			VS72-956099	56NA	A	2/23/88	ELECTRICAL SCHEMATIC REMOTE MANIPULATOR ARM
			VS72-956102	56NA	E	8/15/87	ELECTRICAL SCHEMATIC REMOTE MANIPULATOR ARM
			VS70-764512	1-8	A	7/21/86	SCHEMATIC DIAGRAM - MID MCA #1 RIGHT FWD MID FUS
			VS70-764419	1-8	C	6/20/86	SCHEMATIC DIAGRAM - MID MCA #1 RIGHT FWD MID FUS
			VS70-764522	1-13	B	7/21/86	SCHEMATIC DIAGRAM - MID MCA #2 RIGHT FWD MID FUS

DWG	SIGNATURE	DATE	DWG	SIGNATURE	DATE
14.4-7	ENGR J. HUGHES			ENGR	
	ENGR J. M. Hughes	11/2/90		ENGR	
14.4-8	ENGR D. WAGNER			ENGR	
	ENGR D. Wagner	10/26/90		ENGR	
	ENGR			APP Ernest Smith	11-14-90
	ENGR			APP R D Lee	11/15/90
	ENGR			OMNIPLAN	
	ENGR			LTR E PCN	

NATIONAL AERONAUTICS AND SPACE ADMINISTRATION
LYNDON B. JOHNSON SPACE CENTER HOUSTON, TEXAS

VENDOR DRAWING REFERENCES

SPACE SHUTTLE ALL

TBL NO 14-I

BASIC REV E

FOR DETAILED COMPONENT AND LOGIC INFORMATION REFER TO:

SSSH DWG NO.	SSSH DWG TITLE	VENDOR NAME	VENDOR DWG NO.	VENDOR SHEET NO.	REV	DATE	VENDOR DRAWING TITLE
14.4 (SHEET 8) (CONC'D)			VS70-764429	1-13	F	6/20/86	SCHEMATIC DIAGRAM - MID MCA #2 RIGHT FWD MID FUS
			VS70-764532	1-11	B	7/21/86	SCHEMATIC DIAGRAM - MID MCA #3 MID FUSELAGE
			VS70-764439	1-11	E	6/20/86	SCHEMATIC DIAGRAM - MID MCA #3 MID FUSELAGE
			VS70-764442	1-12	J	7/23/86	SCHEMATIC DIGRAM - MID MICA #4 RIGHT FWD MID FUS
			VS70-764449	1-12	F	6/20/86	SCHEMATIC DIAGRAM - MID MCA #4 RIGHT FWD MID FUS
			VS70-976099	76AS	A	3/23/89	PRE-FLT BUS 1 & 2 CONT, MONITOR, AND DISTRIBUTION
			VS70-976102	76AS	G	6/5/87	PRE-FLT BUS 1 & 2 CONT, MONITOR, AND DISTRIBUTION
14.5 (SHEET 1)	RMS SW OV	IBM	NAS9-14444		OI-20	6/18/90	OPERATIONAL DETAILED DESIGN SPECIFICATION
		IBM					RMS SOFTWARE CODE LISTING
		IBM	SS-P-0002-170				CPDS LEVEL A
14.5 (SHEET 2)	RMS SW OV	IBM	NAS9-14444		OI-20	6/18/90	OPERATIONAL DETAILED DESIGN SPECIFICATION
		IBM					RMS SOFTWARE CODE LISTING
14.6 (SHEET 1)	RMS MPM/MRL ELEC	ROCKWELL	VS70-540512	1 & 2	B	6/5/84	SCHEMATIC DIAGRAM-PORT MANIPULATOR DEPLMT CONTROL SUBSYSTEM
		ROCKWELL	VS70-540519	1 & 2	A	5/11/84	SCHEMATIC DIAGRAM PORT MANIPULATOR DEPLMT CONTROL SUBSYSTEM
		ROCKWELL	VS72-956099	56 HA & 56 HB	A	2/23/88	PORT MANIPULATOR DEPLOYMENT SYSTEM 1
		ROCKWELL	VS72-956102	56 HA & 56 HB	E	4/22/85	PORT MANIPULATOR DEPLOYMENT SYSTEM 1
		ROCKWELL	VS70-540702	1-3	L	5/3/84	SCHEMATIC DIAGRAM PORT MANIP RETTN LATCH CONTROL SUBSYSTEM
		ROCKWELL	VS70-540709	1 -2	A	3/16/81	SCHEMATIC DIAGRAM PORT MANIP RETTN LATCH CONTROL SUBSYSTEM
		ROCKWELL	VS72-956099	56 KA & 56 KB	A	2/11/85	SCHEMATIC DIAGRAM PORT MANIP RETTN LATCH CONTROL SUBSYSTEM
		ROCKWELL	VS72-956102	56 KA & 56 KB	E	4/22/85	SCHEMATIC DIAGRAM PORT MANIP RETTN LATCH CONTROL SUBSYSTEM
14.6 (SHEET 2)	MPM/MRL MECH 2	ROCKWELL	V082-544600	1	A	5/1/79	MECHANISM ASSEMBLY - MPM SHOULDER
		ROCKWELL	V082-544601	1, 2	A	8/4/81	FITTING ASSEMBLY - LOWER SHOULDER, MPM
		ROCKWELL	V082-544650	2, 3	A	6/14/79	MECHANISM ASSEMBLY - RETENTION PEDESTAL
		ROCKWELL	V082-544651	1	A	8/25/81	FITTING ASSEMBLY - LOWER RETENTION, MPM
		ROCKWELL	V082-544835			10/23/79	MECHANISM ASSEMBLY - SWITCH MANIPULATOR LATCH MECHANISM

DWG	SIGNATURE	DATE	DWG	SIGNATURE	DATE
14.4-8	ENGR D. WAGNER			ENGR	
	ENGR D. Wagner	10/26/90		ENGR	
14.5-1,2	ENGR C. BOLE			ENGR	
	ENGR C. D. Bole	10/26/90		ENGR	
14.6-1,2	ENGR D. LINDNER			APP Ernest Smith	11-14-90
	ENGR D. Lindner	10/26/90		APP R D Leal	11/15/90
	ENGR			OMNIPLAN	
	ENGR			LTR E	PCN

NATIONAL AERONAUTICS AND SPACE ADMINISTRATION
LYNDON B. JOHNSON SPACE CENTER HOUSTON, TEXAS

VENDOR DRAWING REFERENCES

SPACE SHUTTLE | TBL NO 14-I
ALL

BASIC REV E

FOR DETAILED COMPONENT AND LOGIC INFORMATION REFER TO:

SSSH DWG NO.	SSSH DWG TITLE	VENDOR NAME	VENDOR DWG NO.	VENDOR SHEET NO.	REV	DATE	VENDOR DRAWING TITLE
14.6 (SHEET 2) (CONC'D)		ROCKWELL	V082-544851	1		7/26/79	BASE ASSEMBLY - RETENTION, MPM
		ROCKWELL	V082-544800	1	A	2/16/81	MANIPULATOR POSITIONING MECHANISM ASSEMBLY - UPPER
		ROCKWELL	V082-544740	1	NC	2/19/80	SWITCH ASSEMBLY - MODULE, READY TO LATCH, MPM
		ROCKWELL	V082-544850	1	A	8/25/81	BASE ASSEMBLY - SHOULDER, MANIPULATOR POSITIONING MECHANISM
		ROCKWELL	M072-544501	3	B	7/5/84	MECHANICAL INSTALLATION - MPM TECH ORDER INSTALLATION
		ELLANEF	A1059A010	2 & 3	E	7/14/78	LATCH ASSEMBLY - MANIPULATOR RETENTION
		ELLANEF	A1059C010	1	D	7/20/78	MANIPULATOR RETENTION LATCH ASSEMBLY
14.6 (SHEET 3)	PORT RMS JETTISON ELECT	R.I.	VS70-540809	1-5	C	4/23/87	STARBD MANIP ARM SHLDR JTSN & RETTN* LATCH SUBSYSTEM
		R.I.	VS70-540822	1-5	A	3/24/83	STARBD MANIP ARM SHLDR JTSN & RETTN* LATCH SUBSYSTEM
		R.I.	VS72-	45-48	E/EOFO6		INTEGRATED SYSTEM SCHEMATIC-ORBITER OV-102 MECHANICAL & PAYLOAD SYSTEMS
		R.I.	VS70-540909	1-5	A	2/2/83	PORT MANIP ARM SHLDR JTSN & RETTN LCH JTSN SUBSYSTEM
		R.I.	VS70-540922	1-5	B	3/24/83	PORT MANIP ARM SHLDR JTSN & RETTN LCH JTSN SUBSYSTEM
		ROCKWELL	VS72-	54-57	A/EOB08		INTEGRATED SYSTEM SCHEMATIC-ORBITER OV-299
		ROCKWELL	VS70-764372	1, 2	C	6/28/79	SCHEMATIC DIAGRAM - MIDBODY JETTISON CONTROLLER ASSEMBLY
14.7 (SHEET 1)	FRGF	SPAR	51450F1	1 TO 2 OF 2	C	9/86	OUTLINE AND INSTALLATION FLIGHT RELEASABLE GRAPPLE FIXTURE
		SPAR	SPAR-RMS. R.950	PG 14.15	-	6/84	OPERATION ANALYSIS REPORT OPERATION OF A FRGF BY A SUITED CREWMEMBER
		SPAR	51450D114	1 OF1	-	11/83	TARGET PLATE (FRGF)
14.7 (SHEET 2)	RSGF	SPAR	51574E100	1 OF 2	A	9/85	OUTLINE AND INSTALLATION RIGIDIZE SENSING GRAPPLE FIXTURE
		SPAR	51574E101	1 OF 2	C	9/87	GRAPPLE FIXTURE/EVA RELEASE ASSY
		SPAR	SPAR-RMS-PA.1064 (A)	PG 7	-	9/86	HAZARD ANALYSIS FOR RSGF

DWG	SIGNATURE	DATE	DWG	SIGNATURE	DATE
14.6-2	ENGR D. LINDNER			ENGR	
	ENGR D. Lindner	10/26/90		ENGR	
14.6-3	ENGR R. FOALE			ENGR	
	ENGR R Foale	11/4/90		ENGR	
14.7-1,2	ENGR D. GOODWIN			APP Ernest Smith	11-14-90
	ENGR D. Goodwin	10/31/90		APP K D Leal	11/15/90
	ENGR			OMNIPLAN	
	ENGR			LTR E PCN	

NATIONAL AERONAUTICS AND SPACE ADMINISTRATION
LYNDON B. JOHNSON SPACE CENTER HOUSTON, TEXAS

VENDOR DRAWING REFERENCES

SPACE SHUTTLE ALL

TBL NO 14-I

BASIC REV E

FOR DETAILED COMPONENT AND LOGIC INFORMATION REFER TO:

SSSH DWG NO.	SSSH DWG TITLE	VENDOR NAME	VENDOR DWG NO.	VENDOR SHEET NO.	REV	DATE	VENDOR DRAWING TITLE
14.8 (SHEET 1)	FIRMWARE OV	SPAR	2571302				MCIU PERFORMANCE SPEC
		SPAR	2578223		2		MCIU SOFTWARE DOCUMENTATION
		SPAR	RMS-PA.1067				SHUTTLE RMS FMEA AND CIL (VOL I)
14.8 (SHEET 2)	SYNCIR	R.I.	201640N40				PPS MICROCOMPUTER BASIC DEVICES PRODUCT
14.8 (SHEET 3)	FW MEMORY	SPAR	2571302				MCIU PERFORMANCE SPEC
		SPAR	2578223		2		MCIU SOFTWARE DOCUMENTATION
14.9 (SHEET 1)	YO ELEC	ROCKWELL	V790-54001	1, 2, 6, 7, 11, 12	B	3/22/88	SCHEMATIC DIAGRAM SPDS DEPLOYMENT SUBSYSTEM
14.9 (SHEET 2)	RDU ELEC	ROCKWELL	V790-54001	1, 2, 3, 4, 5, 11, 12	B	3/22/88	SCHEMATIC DIAGRAM SPDS DEPLOYMENT SUBSYSTEM
14.9 (SHEET 3)	P.L RELEASE & DRIVE TRANSFER	ROCKWELL	V790-54001	8, 9, 10, 11, 12	B	3/22/88	SCHEMATIC DIAGRAM SPDS DEPLOYMENT SUBSYSTEM
14.9 (SHEET 4)	SPDS MECH 1	ROCKWELL	V790-544002	1		8/8/88	SCHEMATIC DIAGRAM SPDS PRIMARY AND SECONDARY PEDESTAL ASSY.
14.9 (SHEET 5)	SPDS MECH 2	ROCKWELL	V790-544002	1		8/8/88	SCHEMATIC DIAGRAM SPDS PRIMARY AND SECONDARY PEDESTAL ASSY
14.10 (SHEET 1)	NEW RMS MCIU	SPAR	812736	1		7/4/89	ANALOG INTERFACE BLOCK DIAGRAM
		SPAR	812735	1		7/7/89	DIGITAL INTERFACE FUNCTIONAL DIAGRAM
		SPAR	812738	1		7/4/89	FAILURE DETECTOR BOARD BLOCK DIAGRAM
		SPAR	812737	1		7/6/89	COMPUTER INTERFACE FUNCTIONAL DIAGRAM
		SPAR	812798	1		10/4/89	MANIPULATOR CONTROLLER POWER CONDITIONER SCHEMATIC DIAGRAM
		SPAR	812739	1		7/10/89	MCIU CPU BOARD SCHEMATIC
		SPAR	812740	1		7/10/89	EPROM, RAM, AND PARITY BOARDS BLOCK DIAGRAM

DWG	SIGNATURE	DATE	DWG	SIGNATURE	DATE
14.8-1,2,3	ENGR R. KERR			ENGR	
	ENGR R. Kerr	11/5/90		ENGR	
14.9-1,2	ENGR D. LINDNER			ENGR	
	ENGR D. Lindner	10/.6/90		ENGR	
14.9-3,4,5	ENGR R. FOALE			APP Ernest Smith	11-14-90
	ENGR R. Foale	11/2/90		APP R.N. Tant	11/15/90
14.10-1	ENGR S. FERRARA			OMNIPLAN	
	ENGR S. Ferrara	10/26/90		LTR E	PCN

NATIONAL AERONAUTICS AND SPACE ADMINISTRATION
LYNDON B. JOHNSON SPACE CENTER HOUSTON, TEXAS

VENDOR DRAWING REFERENCES

SPACE SHUTTLE ALL | TBL NO 14-I | PAGE 14.I-10 | SHEET 10 OF 11

BASIC REV E

FOR DETAILED COMPONENT AND LOGIC INFORMATION REFER TO:

SSSH DWG NO.	SSSH DWG TITLE	VENDOR NAME	VENDOR DWG NO.	VENDOR SHEET NO.	REV	DATE	VENDOR DRAWING TITLE
14.11 (SHEET 1)	NEW FIRMWARE OV	SPAR	RML-009-88-013			7/89	FLIGHT SOFTWARE TOP LEVEL DESIGN
			RML-009-88-032			7/89	FLIGHT SOFTWARE DETAILED DESIGN
			SG 1090			10/88	MANIPULATOR CONTROLLER INTERFACE UNIT SPECIFICATION
			812831			8/2/89	FLIGHT SOFTWARE REQUIREMENTS SPECIFICATIONS
			813362			11/89	MANIPULATOR CONTROLLER INTERFACE UNIT FLIGHT SOFTWARE PROGRAM
14.11 (SHEETS 2 & 3)	NEW MCIU DETAILED FIRMWARE	SPAR	RML-009-88-013			7/89	FLIGHT SOFTWARE TOP LEVEL DESIGN
			RML-009-88-032			7/89	FLIGHT SOFTWARE DETAILED DESIGN
			SG 1090			10/88	MANIPULATOR CONTROLLER INTERFACE UNIT SPECIFICATION
			812831			8/2/89	FLIGHT SOFTWARE REQUIREMENTS SPECIFICATIONS
			813362			11/89	MANIPULATOR CONTROLLER INTERFACE UNIT FLIGHT SOFTWARE PROGRAM
14.11 (SHEET 4)	NEW MCIU MEMORY FIRMWARE	SPAR	RML-009-88-013			7/89	FLIGHT SOFTWARE TOP LEVEL DESIGN
			RML-009-88-032			7/89	FLIGHT SOFTWARE DETAILED DESIGN
			SG 1090			10/88	MANIPULATOR CONTROLLER INTERFACE UNIT SPECIFICATION
			812831			8/2/89	FLIGHT SOFTWARE REQUIREMENTS SPECIFICATIONS
			813362			11/89	MANIPULATOR CONTROLLER INTERFACE UNIT FLIGHT SOFTWARE PROGRAM
14.12 (SHEET 1)	ROEU ELECTRICAL OVERVIEW	ROCKWELL	VS70-764412	2,4,5,6	G	9/17/82	SCHEMATIC DIAGRAM MID MOTOR CONT ASSY NO. 1 RIGHT FWD MID FUSELAGE
			VS70-760702	ALL	H	8/15/86	SCHEMATIC DIAGRAM MOTOR CONTROL ASSY POWER DISTRIBUTION
			VS70-733199	1 AND 2	C	9/30/86	SCHEMATIC DIAGRAM D&C PANEL R13A2 RIGHT-HAND CONSOLE
			VS70-733709	4	D	5/10/84	SCHEMATIC DIAGRAM PANEL A6A 1 AFT ON ORBIT STA
			VS70-733897	1 AND 2	B	5/8/85	SCHEMATIC DIAGRAM D&C PANEL MA7D3C MID DECK BAY 3B
			V751-544150	ALL		5/13/86	LIMIT SWITCH ASSY - LATCH DRIVE, ORBITER DISCONNECT MECH, ROEU
			V751-544250	ALL		7/10/86	LIMIT SWITCH ASSY - ORBITER DISCONNECT MECH, ROEU
14.12 (SHEET 2)	ROEU MECHANICAL OVERVIEW	ROCKWELL	JSC-23004	ALL		7/88	ROEU USER'S MANUAL
14.13 (SHEET 3)	ROEU MECHANICAL	ROCKWELL	V751-544100	ALL		3/9/87	ORBITER DISCONNECT MECHANISM, ASSY, ROEU
			V751-544110	ALL		9/26/86	MECHANISM ASSY - ORBITER ARM DRIVE, ROEU
			V751-544200	ALL		6/24/86	ORBITER DISCONNECT ASSY - ROEU

DWG	SIGNATURE	DATE	DWG	SIGNATURE	DATE
14.11,1-4	ENGR R. KERR			ENGR	
	ENGR R. Kerr	11/13/90		ENGR	
14.12-1,2,3	ENGR K. CARLISLE-MORGAN			ENGR	
	ENGR K. Carlisle-Morgan	11-13-90		ENGR	
	ENGR			APP Ernest Smith	11-14-90
	ENGR			APP R. Neal	11/15/90
	ENGR			OMNIPLAN	
	ENGR			LTR E	PCN

NATIONAL AERONAUTICS AND SPACE ADMINISTRATION
LYNDON B. JOHNSON SPACE CENTER HOUSTON, TEXAS

VENDOR DRAWING REFERENCES

SPACE SHUTTLE	TBL NO 14-I
ALL	
	PAGE 14.1-11 SHEET 11 OF 11

*U.S.GOVERNMENT PRINTING OFFICE:1990-561-057/20067

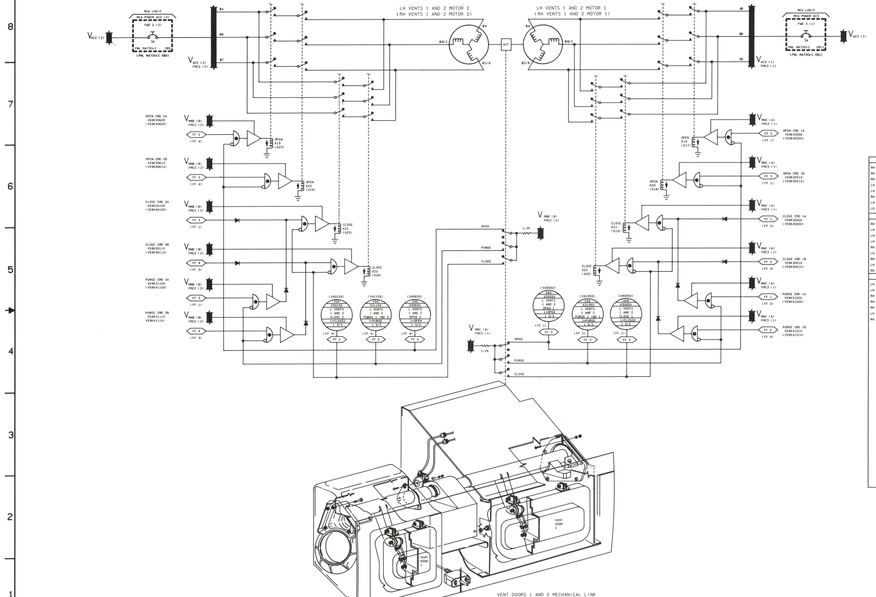

TABLE A
VENT DOOR MID-SP'S

OPEN	BIT:	VENT COMMANDS	CLOSE	
PTS	BIT:		PTS	BITS
4566360551	4566370251	1 THC VENTS 1&2 OPEN	4566360651	4566370751
4566360651	4566370251	1 THC VENTS 1&2 OPEN	4566360551	4566370751
4566360751	4566370251	1 THC VENTS 1&2 OPEN	4566360551	4566370651
4566360851	4566370251	1 THC VENTS 1&2 OPEN	4566360551	4566370651
4566360551	4566370651	1 PB VENT 1 OPEN	4566360551	4566370851
4566360651	4566370651	1 PB VENT 1 OPEN	4566360651	4566370851
4566360751	4566370651	1 PB VENT 1 OPEN	4566360751	4566370851
4566360851	4566370651	1 PB VENT 1 OPEN	4566360851	4566370851
4566360551	4566370851	1 PB VENT 2 OPEN	4566360551	4566370651
4566360651	4566370851	1 PB VENT 2 OPEN	4566360651	4566370651
4566360751	4566370851	1 PB VENT 2 OPEN	4566360751	4566370651
4566360851	4566370851	1 PB VENT 2 OPEN	4566360851	4566370651
4566360551	4566380251	1 PB/H VENT 1&2 OPEN	4566360551	4566380351
4566360651	4566380251	1 PB/H VENT 1&2 OPEN	4566360651	4566380351
4566360751	4566380251	1 PB/H VENT 1&2 OPEN	4566360751	4566380351
4566360851	4566380251	1 PB/H VENT 1&2 OPEN	4566360851	4566380351
4566360551	4566380651	1 PB VENT 1 OPEN 2	4566360551	4566380751
4566360651	4566380651	1 PB VENT 1 OPEN 2	4566360651	4566380751
4566360751	4566380651	1 PB VENT 1 OPEN 2	4566360751	4566380751
4566360851	4566380651	1 PB VENT 1 OPEN 2	4566360851	4566380751
4566360551	4566380751	1 PB VENT 2 OPEN 2	4566360551	4566380651
4566360651	4566380751	1 PB VENT 2 OPEN 2	4566360651	4566380651
4566360751	4566380751	1 PB VENT 2 OPEN 2	4566360751	4566380651
4566360851	4566380751	1 PB VENT 2 OPEN 2	4566360851	4566380651
4566360551	4566381051	1 APT VENTS 1&2 OPEN	4566360551	4566380251
4566360651	4566381051	1 APT VENTS 1&2 OPEN	4566360651	4566380251
4566360751	4566381051	1 APT VENTS 1&2 OPEN	4566360751	4566380251
4566360851	4566381051	1 APT VENTS 1&2 OPEN	4566360851	4566380251

TABLE B
POWER/CONTROL GROUPS

CNTL MB 3	I/O MA 4	A1 1	MOTOR CONTROL	MDA (OPEN)	MDA (CLOSE)
MA 1 AND 2 VENT 1	MA 1 AND 2 VENT 1	MA 1 AND 2 VENT 1	CMDA 1	MDA 07 1	
LA 1 VENT 1	LA 1 VENT 1	LA 1 AND 2 VENT 1		LA 1 AND 2 VENT 1	MOTOR 2
MA 1 VENT 1	MA 1 VENT 1	MA 1 VENT 1	CMDA 2	MA 1 VENT 1	MOTOR 2
LA 1 VENT 1	LA 1 VENT 1	MA 1&2 VENT 1		MA 1 AND 2 VENT 1	MOTOR 2
LA 2 AND 1 VENT 1	LA 2 AND 1 VENT 1	LA 1 AND 2 VENT 1		LA 1 AND 2 VENT 1	MOTOR 2
MA 2 VENT 1	MA 2 VENT 1	MA 2 VENT 1	CMDA 3	MA 2 VENT 1	MOTOR 2
LA 2 VENT 1	LA 2 VENT 1	LA 2 VENT 1		LA 2 VENT 1	MOTOR 2
LA 2 AND 1 VENT 1	LA 2 AND 1 VENT 1	LA 2 AND 1 VENT		LA 2 AND 1 VENT 1	MOTOR 2
30% DG 1	DG MA 4	A1 1	MDA 1	MDA 07 2	
MA 1 AND 2 VENT 2	MA 1 AND 2 VENT 2	MA 1 AND 2 VENT 2		MA 1 AND 2 VENT 2	MOTOR 1
LA 1 VENT 2	LA 1 VENT 2	LA 1 VENT 2	CMDA 4	LA 1 VENT 2	MOTOR 1
MA 1 VENT 2	MA 1 VENT 2	MA 1 VENT 2		MA 1 VENT 2	MOTOR 1
LA 1 VENT 2	LA 1 VENT 2	LA 1 VENT 2	MDA 2	LA 1 VENT 2	MOTOR 1
LA 2 AND 1 VENT 2	LA 2 AND 1 VENT 2	LA 2 AND 1 VENT 2		LA 2 AND 1 VENT 2	MOTOR 1
MA 2 VENT 2	MA 2 VENT 2	MA 2 VENT 2	CMDA 5	MA 2 VENT 2	MOTOR 1
LA 2 VENT 2	LA 2 VENT 2	LA 2 VENT 2		LA 2 VENT 2	MOTOR 1
LA 2 AND 1 VENT 2	LA 2 AND 1 VENT 2	LA 2 AND 1 VENT 2	MDA 3	LA 2 AND 1 VENT 2	MOTOR 1
30% DG 2	DG MA 4	A1 2		MDA 07 3	
LA 1 AND 2 VENT 1	LA 1 AND 2 VENT 1	LA 1 AND 2 VENT 1	CMDA 6	LA 1 AND 2 VENT 1	MOTOR 2
LA 1 VENT 1	LA 1 VENT 1	LA 1 VENT 1		LA 1 VENT 1	MOTOR 2
MA 1 VENT 2	MA 1 VENT 2	MA 1 VENT 2	MDA 4	MA 1 VENT 2	MOTOR 2
LA 1 VENT 2	LA 1 VENT 2	LA 1 VENT 2		LA 1 VENT 2	MOTOR 2
MA 2 VENT 1	MA 2 VENT 1	MA 2 VENT 1	CMDA 7	MA 2 VENT 1	MOTOR 2
LA 2 VENT 1	LA 2 VENT 1	LA 2 VENT 1		LA 2 VENT 1	MOTOR 2
MA 2 AND 1 VENT 1	MA 2 AND 1 VENT 1	MA 2 AND 1 VENT 1	MDA 5	MA 2 AND 1 VENT 1	MOTOR 2
			CMDA 8	MDA 07 4	
				MA 1 AND 2 VENT 2	MOTOR 1
			MDA 6	LA 1 AND 2 VENT 2	MOTOR 1
				MA 1 VENT 2	MOTOR 1
			CMDA 9	LA 1 VENT 2	MOTOR 1
				MA 2 VENT 2	MOTOR 1
			MDA 7	LA 2 VENT 2	MOTOR 1
				MA 2 AND 1 VENT 2	MOTOR 1
			CMDA 10	MDA 08 1	
				MA 1 AND 2 VENT 1	MOTOR 2
			MDA 8	LA 1 AND 2 VENT 1	MOTOR 2
				MA 1 VENT 1	MOTOR 2
			CMDA 11	LA 1 VENT 1	MOTOR 2
				MA 2 VENT 1	MOTOR 2
			MDA 9	LA 2 VENT 1	MOTOR 2
				MA 2 AND 1 VENT 1	MOTOR 2
			CMDA 12	MDA 08 2	
				MA 1 AND 2 VENT 2	MOTOR 1
			MDA 10	LA 1 AND 2 VENT 2	MOTOR 1
				MA 1 VENT 2	MOTOR 1
			CMDA 13	LA 1 VENT 2	MOTOR 1
				MA 2 VENT 2	MOTOR 1
			MDA 11	LA 2 VENT 2	MOTOR 1
				MA 2 AND 1 VENT 2	MOTOR 1
			CMDA 14	MDA 08 3	
				MA 1 AND 2 VENT 1	MOTOR 2
			MDA 12	LA 1 AND 2 VENT 1	MOTOR 2
				MA 1 VENT 1	MOTOR 2
			CMDA 15	LA 1 VENT 1	MOTOR 2
				MA 2 VENT 1	MOTOR 2
			MDA 13	LA 2 VENT 1	MOTOR 2
				MA 2 AND 1 VENT 1	MOTOR 2
			CMDA 16	MDA 08 4	
				MA 1 AND 2 VENT 2	MOTOR 1
			MDA 14	LA 1 AND 2 VENT 2	MOTOR 1
				MA 1 VENT 2	MOTOR 1
			CMDA 17	LA 1 VENT 2	MOTOR 1
				MA 2 VENT 2	MOTOR 1
			MDA 15	LA 2 VENT 2	MOTOR 1
				MA 2 AND 1 VENT 2	MOTOR 1

TABLE C
VENT LOCATION/SIZE

VENT NO	VENT CENTER LN.		PURGE OUTLET AREA	MINIMUM FREE AREA
	Z^{+}	Z^{-}	PER VENT	
1	324.35	475.27	371.01 LH AND RH 4.5 in^2	14.75 in^2 (WITH SCREEN)
2	324.13	474.74	374.58 LH AND RH 4.5 in^2	14.90 in^2 TOTAL 2 VENTS
3	324.13	4335.26	385.42	
4	324.35	4335.26	385.42	NONE REQD.
5	324.13	4335.26	385.42	
6	1321.84	4335.26	385.42 MIN. $\frac{1}{2}$ VENT OPEN 4.5 in^2 POSITION 1	15.0 in^2 (WITH SCREEN)
7	324.13	4335.26	394.28 NONE REQD.	149 in^2 (WITH VENT DOOR OPEN)
8	324.35	4414.78	393.35 LH AND RH 4.5 in^2	29.75 in^2 (WITH SCREEN)
9	324.13	4413.76	393.35 LH AND RH 30.5 in^2	264.82 in^2 TOTAL 2 VENTS

TABLE D
VENT DOOR GROUPS SEQUENCE AND POSITIONS

VG MB NO	VENT DOOR	OPEN SEQUENCE	PURGE NUMBER	OPEN POS.	PURGE POS.
1	1	FIRST	1	-5/+	----
2	2	SECOND	2	-5/+	----
3	7&10	FOURTH	3	-5/+	----
4	8&9	FOURTH	4 (NOT USED)	-5/+	----
5	3 (7)*	THIRD	5	-5/+	-10°
6	4 (8)*	FIFTH	6	-5/+	-10°

NOTES: * ---- INDICATES POSITIONS NOT APPLICABLE TO VENT DOOR

TABLE E
VENT DOOR SEQUENCING

	VENTS 1 AND 2	VENT 3	VENT 4	VENTS 5 AND 6	VENT 7	VENTS 8 AND 9
VENTS AT PGA WITH PURGE (NOTE A)						
LH VENTS TO PGA (A/N)	PG	CL	CL	CL	CL	PG
LWA VENTS TO PGA (A/N)	PG	CL	CL	CL	CL	PG
11.8 MINUTES (NOTE B)	PG	CL	CL	CL	CL	PG
TEMPERATURE CLOSED	1 NEED 1					
7+ SEC SECONDS (NOTE C)	OP/CL	OP/CL	OP/CL	OP/CL	OP/CL	OP/CL
SIDE SEP'N (Y-axis)	OP	OP	OP	OP	OP	OP
ON-ORBIT	OP	OP	OP	OP	OP	OP
PRE-E REENTRY	OP/CL	CL	CL	CL	CL	CL
E-MINUS 4 MINUTES (NOTE EA4)	OP/CL	CL(1)	CL(1)	CL(1)	CL(1)	CL(1)
ENTRY						
10K EPS SELECTED (NOTE E)	OP/CL	OP/CL	OP/CL	OP/CL	OP/CL	OP/CL
LANDING						
MM(G) (NOTE G)	CL(1)	CL(1)	CL(1)	CL(1)	CL(1)	CL(1)
10K EPS SELECTED (NOTE E)	OP/CL	OP/CL	OP/CL	OP/CL	OP/CL	OP/CL
ERASURE SEQUENCE						
ESC PURGE/TOUCH MIN MAX	PG	CL	CL	CL	CL(PG)	PG
HOLD/2 MINUTES (H-pha)	PG	CL	CL	CL	CL(PG)	PG

NOTES:

(A) VENT DOOR 6 MAY REMAIN IN PURGE POS IL, REMOTE TO PURGE POS LL, OR REMOTE TO THE CLOSED POSITION AT THE OPTION OF THE CREW AS DESCRIBED IN THE FOLLOWING SEQUENCES FOR LANDING

(B) PTS-2 PROGRAMS THE VENT DOOR TIMER TO 11.8 MINUTES AFTER THE VENT DOORS REACH PURGE (VENT 3 CLOSE PULSE HAS BEEN REISSUED TO APPROX.PA7623.1 IN) LATCH

(C) IF THE CRAFT-SENSE FWD LEAKED (SMMAC 1) TRUE, WITH ALL VENTS SENSED=ALCL, AT INITIAL AT 5.96 SECOND INTERVALS (-11=SMMAC1)

(D) PRE-FIRE VENT DOOR CHECK - THIS CHECK MONITORS FOR ALL VENT DOORS ACHIEVING THE IDLE/SEP POSITION AFTER THE VENT DOORS HAVE BEEN COMMANDED CLOSED FOR 7.5 SECONDS. IF AN INDICATION OF THE STATUS FOR EACH OF THE DOORS, AND/OR THE REDUNDANT SET LABOR SEQUENCE (SMMAC 1) INDICATES THAT ANY DOOR IS NOT IN THE IDLE/SEP POSITION, THE PRE-FIRE VENT DOOR CHECK, AND AN EPS SEQUENCE FOR THAT DOOR (1 MIN DELTA PRESSURE) SET 1 IN EPS PA7623.1, THEN THE RH 10K SEQUENCE WILL PROCEED WITH THE ERASE, IF AN EPS OVERRIDE HAS NOT BEEN SET, THE RH 10K SEQUENCE WILL HALT AND THE CREW WILL BE ALERTED BY A MASTER ALARM AND (1 OF 2 MICROSWITCHES) OR DOOR VENT DOOR 1&2 BLOCKING THE STATUS WORD.

(EA) TO CLOSE VENT DOORS

VENTS 1 AND 2 ARE CLOSED MULTI REAL TIME COMMANDS (MRTC) OR DPS UTILITY DISPLAY
DPS 2 VENTS DOORS/CLOSE DISPLAY (SPEC 052) ITEM 44 (CDR)
DPS 3 (SPEC) DOORS/CLOSE DISPLAY (SPEC 052) ITEM 44 (CDR)

TO OPEN VENT DOORS

DPS 2 AND 3 DOORS/ MULTI REAL TIME COMMANDS (MRTC) OR DPS UTILITY DISPLAY
DPS 2 VENTS DOORS/OPEN DISPLAY (SPEC 052) ITEM 43 (CDR)
DPS 3 (SPEC) DOORS/OPEN DISPLAY (SPEC 052) ITEM 43 (CDR)

(EF) OPEN ALL VENTS AT MM3 PA INTERVALS 1 / 1 (SECONDS). ALL VENTS CAN ALSO BE COMMANDED OPEN BY THE CREW USING DPS UTILITY DISPLAY (SPEC 052) TO MM003 AND MM003 USING DOORS/OPEN DISPLAY PAGES OR DPS 1 (SPEC) 052) ITEM 43 (CDR)

(I) ALL VENTS CLOSED AT MM3 PA7 INTERVALS

(H) AFTER THE VENT CLOSE COMMAND IS ISSUED, VENT GROUPS 1 AND 8 LEFT CLOSE PROPEL AT MM3SS TRANSITION, THE SOFTWARE COMMANDS ALL VENT DOORS CLOSED AND GROUP 1 AND 8 LEFT CLOSE CLOSE.

(-) NUMBERS IN PARENTHESIS(-) INDICATES THE ORDER IN WHICH THE VENT DOORS ARE BEING POSITIONED

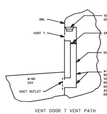

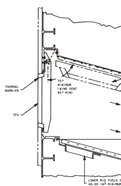

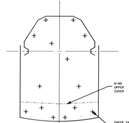

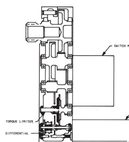

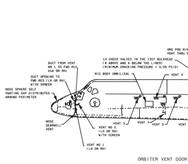

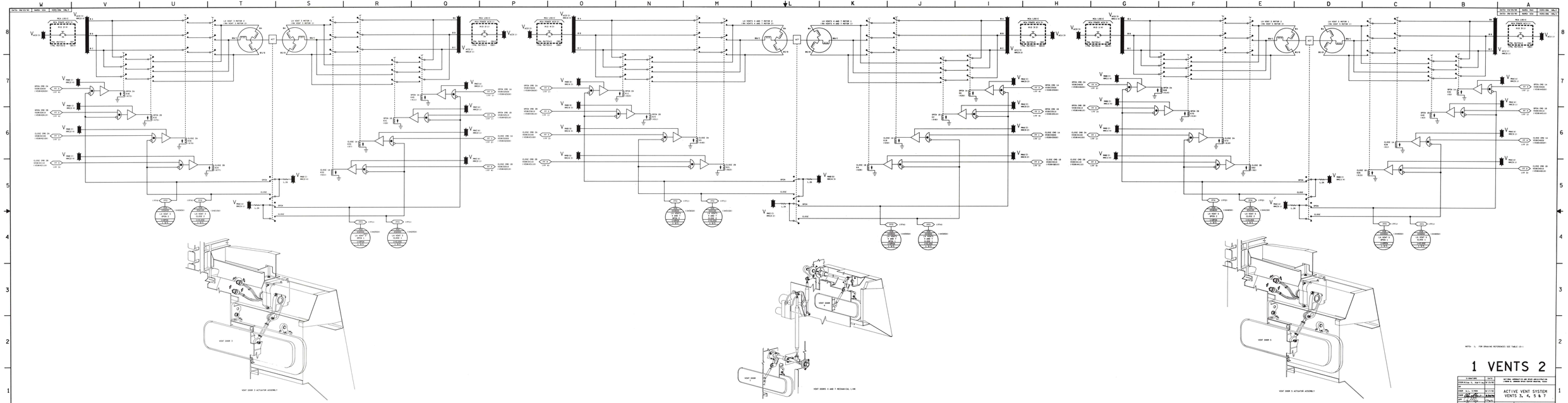
1 VENTS 2
ACTIVE VENT SYSTEM
VENTS 3, 4, 5 & 7
15.1
VENT DOOR 3
VENT DOOR 4
VENT DOOR 5
VENT DOOR 3 ACTUATOR ASSEMBLY
VENT DOORS 4 AND 5 MECHANICAL LINK
VENT DOOR 5 ACTUATOR ASSEMBLY
BASIC REV E
BASIC REV E

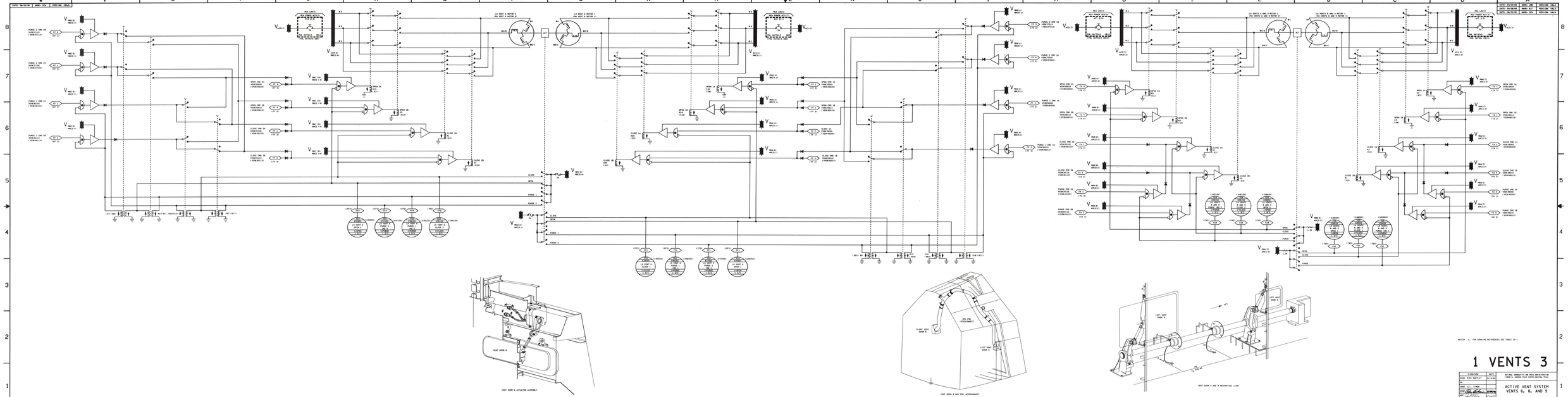

VENT DOOR 6 ACTUATOR ASSEMBLY
VENT DOOR 6 AND PSD INTERCONNECT
VENT DOOR 6 AND 9 MECHANICAL LINK
NOTES: 1. FOR DRAWING REFERENCES SEE TABLE (3-1)
1 VENTS 3
ACTIVE VENT SYSTEM
VENTS 6, 8, AND 9
15.1
BASIC REV E

DATE: 05/10/87	NAME: MDU	VERSION: INIT
DATE: 08/29/90	NAME: JMB	VERSION: INIT

PASS TIME SEQUENCE FLOW CHART

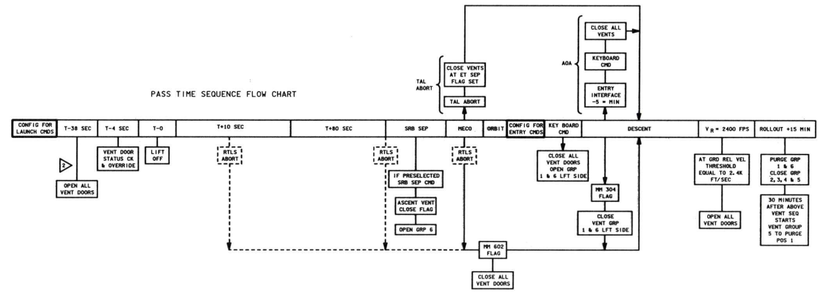

PASS SOFTWARE FLOW CHART

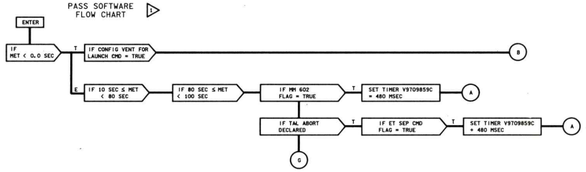

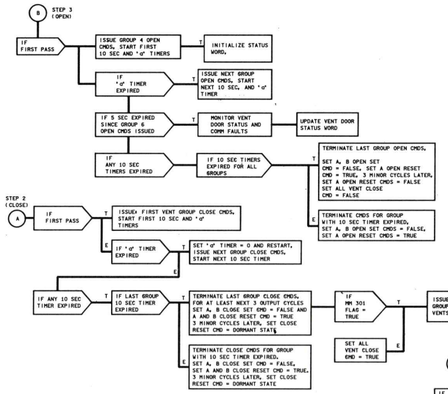

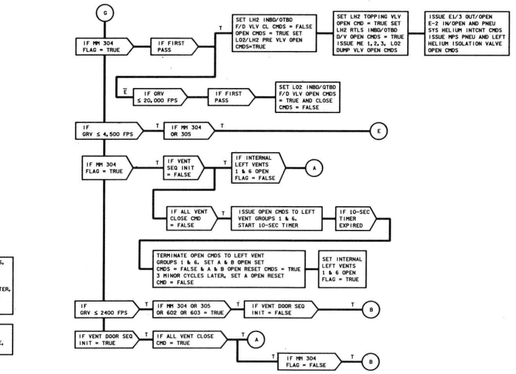

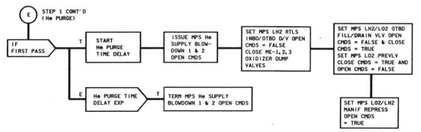

3. FOR DRAWING REFERENCES REFER TO TABLE 15-I

NOTES:
- THE OPEN COMMAND SIGNAL IS HIGH FOR TEN SECONDS. IT IS MONITORED FOR FOUR SECONDS
- DUE TO 01 B SOFTWARE CHANGES, DRAWING LOGIC IS INCOMPLETE. IT WILL BE UPDATED WHEN SOFTWARE REQUIREMENTS ARE COMPLETED

1 VENTS 4

SIGNATURE	DATE	NATIONAL AERONAUTICS AND SPACE ADMINISTRATION LYNDON B. JOHNSON SPACE CENTER HOUSTON, TEXAS
DSGN TERRI FORSYTHE		
DR J.M. BLANCHARD	6/21/87	VENT DOOR SOFTWARE
ENGR A.L. SIMON		
ENGR [signature]	9/5/90	
MGR [signature]	9/5/90	
APP R.T. Neal	9/5/90	SPACE SHUTTLE / DWG NO 15.1
OPNL PLAN S.K. Kimball	9/5/90	ALL
LTR E / PCN		66 X 34 / PAGE / SHEET 4 OF 4

BASIC REV E

BASIC REV E

DATES 8/22/80 NAMES PCR USECONN ONLY
DATES 8/23/80 NAMES BLY USECONN ONLY
DATES 8/29/80 NAMES PCR USECONN ONLY

ORB/ET UMBILICAL CLOSEOUT DOOR OPERATIONAL SEQUENCE

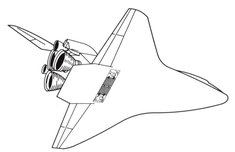

1. DOORS OPEN (CENTERLINE LATCHES LOCKED)

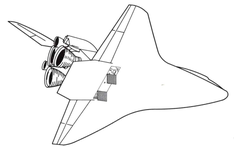

2. DOORS IN TRANSIT TO CLOSED POSITION AND CENTERLINE LATCHES STOWED

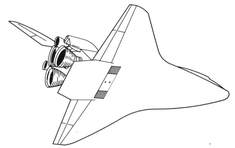

3. DOORS CLOSED, LATCHED AND CENTERLINE LATCHES STOWED

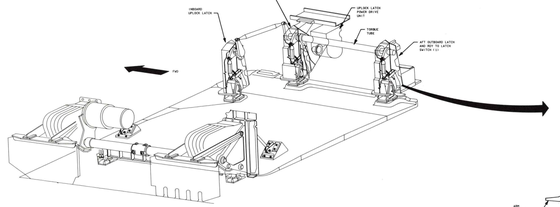

ET UMBILICAL UPLOCK LATCHING MECHANISMS

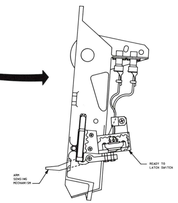

OUTBOARD UPLOCK LATCH MECHANISM WITH READY TO LATCH SWITCH (TYPICAL)

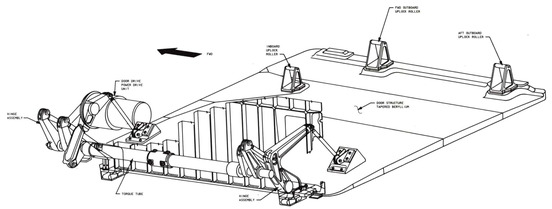

ET UMBILICAL CLOSEOUT DOOR DRIVE MECHANISM

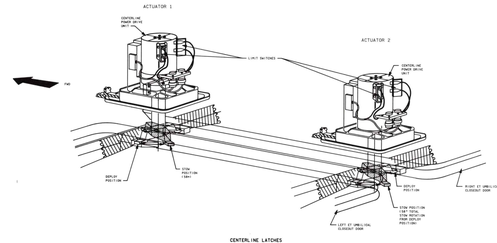

CENTERLINE LATCHES

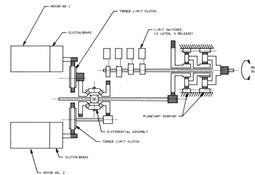

ET UMBILICAL UPLOCK LATCH POWER DRIVE UNIT

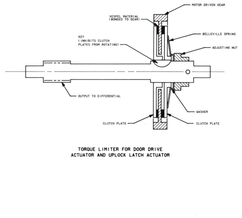

TORQUE LIMITER FOR DOOR DRIVE ACTUATOR AND UPLOCK LATCH ACTUATOR

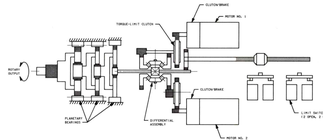

DOOR DRIVE ACTUATOR POWER DRIVE UNIT

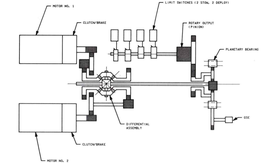

CENTERLINE LATCH ACTUATORS POWER DRIVE UNIT

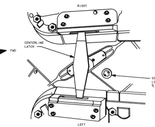

CENTERLINE LATCH IN DEPLOY POSITION

MOTOR SPECIFICATIONS

ACTUATOR	R.P.M. (NO LOAD)	MAX TORQUE (HOLD TORQUE)	MAX PROCESSED POWER REQ	STALL POWER REQ	RE-STALL POWER REQ
CTR. LATCH	6,900	8/170 IN-LBS	55 WATTS	140 WATTS	51 WATTS
UPLOCK LATCH	10,400	4/85 IN-LBS	220 WATTS	360 WATTS	220 WATTS
DOOR DRIVE ACTUATORS	10,400	8/170 IN-LBS	220 WATTS	360 WATTS	220 WATTS

ACTUATOR	OUTPUT TORQUE	MAX ACTUATOR RUNNING TIME			MAX MOTOR STALL TIME
		2 MOTORS	1 MOTOR	1 MOTOR ①	
CTR. LATCH	24/-44 LBS	4 SEC	12 SEC	12 SEC	67 SEC
UPLOCK LATCH	8 LBS	4 SEC	12 SEC	12 SEC	58 SEC
DOOR DRIVE ACTUATOR	14,000 IN-LBS	24 SEC	48 SEC	48 SEC	52 SEC

① 14-18 DEGREES ARE ABOVE OPERATING RANGE OF 3 PHASES

1. FOR DRAWING REFERENCES SEE TABLE 15-1

2 ORB/ET DOORS 1

SIGNATURE	DATE
DOOR SYS. RESPONSIBLE ENGR. (J.H.)	
QA	
DOOR SUB SYS. MGR.	
DESIGN	8/29/80
CHECK	8/29/80
APP.	8/29/80
APP.	8/29/80
DRAFTING (J. Crafton)	8/29/80
T/M	

NATIONAL AERONAUTICS AND SPACE ADMINISTRATION
LYNDON B. JOHNSON SPACE CENTER, HOUSTON, TEXAS

ORBITER/ET UMBILICAL CLOSEOUT DOORS

SPACE SHUTTLE DWG NO. 15.2

REV. LTR

SHEET NO. 1 OF 1

BASIC REV E

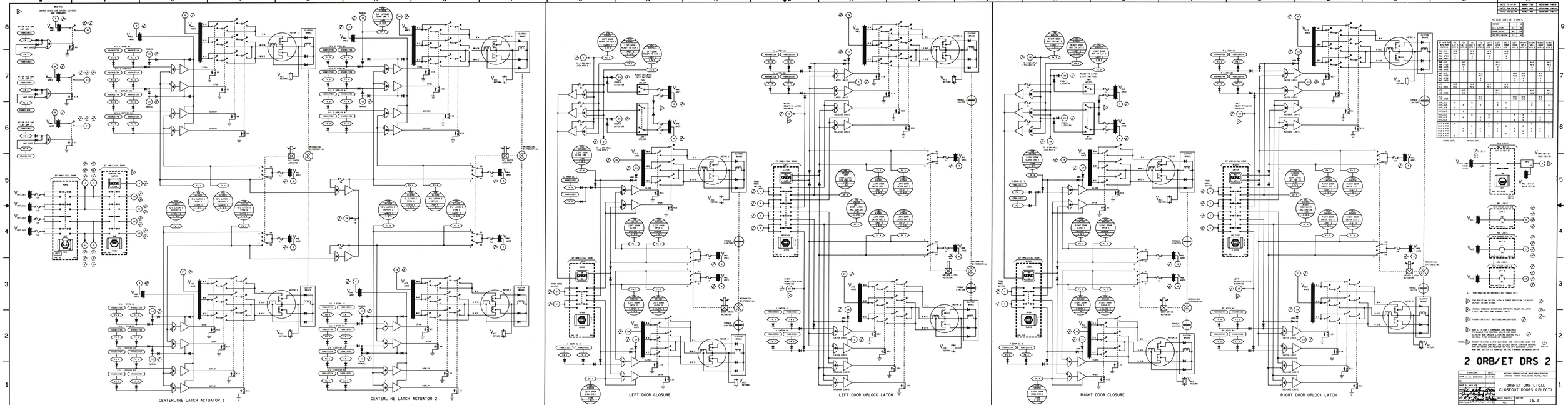
CENTERLINE LATCH ACTUATOR 1
CENTERLINE LATCH ACTUATOR 2
LEFT DOOR CLOSURE
LEFT DOOR UPLOCK LATCH
RIGHT DOOR CLOSURE
RIGHT DOOR UPLOCK LATCH
2 ORB/ET DRS 2
ORB/ET UMBILICAL CLOSEOUT DOORS (ELECT)
15.2
REV E
BASIC REV E

DATE= 7/24/90	NAME= VSH	VERSION= BPT4
DATE= 08/10/90	NAME= LAM	VERSION= BPT5
DATE= 08/21/90	NAME= LAM	VERSION= INIT

DOWNLIST TELEMETRY PARAMETERS

PASS	BFS	NOMENCLATURE	EVENT	MDM
V56X120SX	V98X401TX	ET LMB DR CL LCH 1 STOW IND 1	STO1	FA1
V56X121SX	V98X402BX	ET LMB DR CL LCH 1 STOW IND 2	STO2	FA2
V56X125SX	V98X401EX	ET LMB DR CL LCH 1 DEPLOY IND 1	DPT1	FA1
V56X126SX	V98X402SX	ET LMB DR CL LCH 1 DEPLOY IND 2	DPT2	FA2
V56X130SX	V98X405BX	ET LMB DR CL LCH 2 STOW IND 1	STO1	FA4
V56X131SX	V98X407BX	ET LMB DR CL LCH 2 STOW IND 2	STO2	FA3
V56X135SX	V98X405SX	ET LMB DR CL LCH 2 DEPLOY IND 1	DPT1	FA4
V56X136SX	V98X407SX	ET LMB DR CL LCH 2 DEPLOY IND 2	DPT2	FA3
V56X3010X	V98X409BX	ET L LMB DOOR OPEN IND 1	OPN 1	FA1
V56X3015X	V98X414BX	ET L LMB DOOR OPEN IND 2	OPN 2	FA3
V56X3110X	V98X409DX	ET L LMB DOOR CLOSED IND 1	CLS 1	FA1
V56X3115X	V98X414DX	ET L LMB DR CLOSED IND 2	CLS 2	FA3
V56X3541X	V98X409JX	ET L LMB DR RDY-TO-LCH IND 1	RDY 1	FA1
V56X3542X	V98X409KX	ET L LMB DR RDY-TO-LCH IND 2	RDY 2	FA1
V56X3543X	V98X409SX	ET L LMB DR RDY-TO-LCH IND 3	RDY 3	FA1
V56X3550X	V98X409JX	ET L LMB DR LATCHED IND 1	LCH 1	FA1
V56X3560X	V98X413JX	ET L LMB DR LATCHED IND 2	LCH 2	FA4
V56X3650X	V98X409ZX	ET L LMB DR LATCH REL IND 1	REL 1	FA1
V56X3660X	V98X413ZX	ET L LMB DR LATCH REL IND 2	REL 2	FA4
V56X4010X	V98X412BX	ET R LMB DOOR OPEN IND 1	OPN 1	FA4
V56X4015X	V98X410BX	ET R LMB DOOR OPEN IND 2	OPN 2	FA2
V56X4110X	V98X413DX	ET R LMB DOOR CLOSED IND 1	CLS 1	FA4
V56X4115X	V98X410DX	ET R LMB DOOR CLOSED IND 2	CLS 2	FA2
V56X4541X	V98X415JX	ET R LMB DR RDY-TO-LCH IND 1	RDY 1	FA3
V56X4542X	V98X414KX	ET R LMB DR RDY-TO-LCH IND 2	RDY 2	FA3
V56X4543X	V98X415SX	ET R LMB DR RDY-TO-LCH IND 3	RDY 3	FA3
V56X4550X	V98X415JX	ET R LMB DR LATCHED IND 1	LCH 1	FA3
V56X4560X	V98X411JX	ET R LMB DR LATCHED IND 2	LCH 2	FA2
V56X4650X	V98X415ZX	ET R LMB DR LATCH REL IND 1	REL 1	FA3
V56X4660X	V98X411ZX	ET R LMB DR LATCH REL IND 2	REL 2	FA2

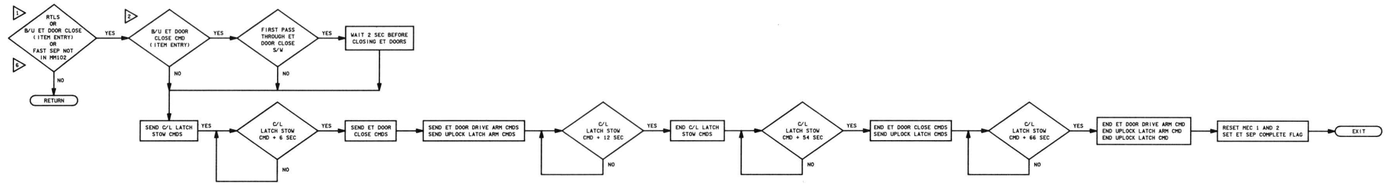

PASS SOFTWARE

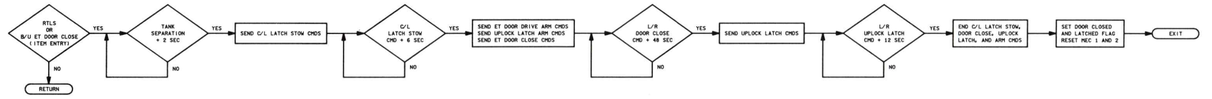

BFS SOFTWARE

▷ FAST SEP FLAG IS SET BY:
1. MANUAL ET SEP CMD IN MM102 OR MM601
OR
2. MANUAL ET SEP CMD IN MM103 WITH TWO MAIN ENGINES DOWN

▷ BFS G/L INDICATIONS NOT DEFINED ON DOWNLIST

4. FOR DRAWING REFERENCES SEE TABLE 15-I

3. MEC-MASTER EVENTS CONTROLLER

▷ SPEC 51 OVERRIDE DISPLAY IS AVAILABLE IN OPS 1, 3, AND 6

NOTES: ▷ SOFTWARE WILL AUTOMATICALLY CLOSE DOORS FOR AN RTLS DURING MM602

2 ET DOOR S/W 3

SIGNATURE	DATE	NATIONAL AERONAUTICS AND SPACE ADMINISTRATION LYNDON B. JOHNSON SPACE CENTER HOUSTON, TEXAS
DSGN B. J. TEDDER JR.	7/20/87	
DR		
ENGR DAN WALLACE	8/09/90	ET DOOR SOFTWARE PASS AND BFS OI8D AND OI8F
ENGR	8/10/90	
APP	8/10/90	
APP	8/9/90	SPACE SHUTTLE / DWG NO 15.2
CHM (PLAN) S. K. Kimball 11-7-90		ALL
LTR E / PCN		GG 9 34 / PAGE / SHEET 3 OF 4

BASIC REV E

BASIC REV E

DATE▷ 08/10/90	NAME▷ LAM	VERSION▷ BPTs 5
DATE▷ 08/10/90	NAME▷ JMB	VERSION▷ BPTs 1
DATE▷ 8/17/90	NAME▷ VSH	VERSION▷ INKs 1

DOWNLIST TELEMETRY PARAMETERS

PASS	BFS	NOMENCLATURE	EVENT	MDM
V56X1205X	V98X4017X	ET LMB DR CL LCH 1 STOW IND 1	STO1	FA1
V56X1215X	V98X4036X	ET LMB DR CL LCH 1 STOW IND 2	STO2	FA2
V56X1255X	V98X4016X	ET LMB DR CL LCH 1 DEPLOY IND 1	DPY1	FA1
V56X1265X	V98X4035X	ET LMB DR CL LCH 1 DEPLOY IND 2	DPY2	FA2
V56X1305X	V98X4056X	ET LMB DR CL LCH 2 STOW IND 1	STO1	FA4
V56X1315X	V98X4078X	ET LMB DR CL LCH 2 STOW IND 2	STO2	FA3
V56X1355X	V98X4055X	ET LMB DR CL LCH 2 DEPLOY IND 1	DPY1	FA4
V56X1365X	V98X4075X	ET LMB DR CL LCH 2 DEPLOY IND 2	DPY2	FA3
V56X3010X	V98X4089X	ET L LMB DOOR OPEN IND 1	OPN 1	FA1
V56X3015X	V98X4149X	ET L LMB DOOR OPEN IND 2	OPN 2	FA3
V56X3110X	V98X4090X	ET L LMB DOOR CLOSED IND 1	CLS 1	FA1
V56X3115X	V98X4150X	ET L LMB DOOR CLOSED IND 2	CLS 2	FA3
V56X3541X	V98X4093X	ET L LMB DR RDY-TO-LCH IND 1	RDY 1	FA1
V56X3542X	V98X4094X	ET L LMB DR RDY-TO-LCH IND 2	RDY 2	FA1
V56X3543X	V98X4095X	ET L LMB DR RDY-TO-LCH IND 3	RDY 3	FA1
V56X3550X	V98X4091X	ET L LMB DR LATCHED IND 1	LCH 1	FA1
V56X3560X	V98X4131X	ET L LMB DR LATCHED IND 2	LCH 2	FA4
V56X3650X	V98X4092X	ET L LMB DR LATCH REL IND 1	REL 1	FA1
V56X3660X	V98X4132X	ET L LMB DR LATCH REL IND 2	REL 2	FA4
V56X4010X	V98X4129X	ET R LMB DOOR OPEN IND 1	OPN 1	FA4
V56X4015X	V98X4109X	ET R LMB DOOR OPEN IND 2	OPN 2	FA2
V56X4110X	V98X4130X	ET R LMB DOOR CLOSED IND 1	CLS 1	FA4
V56X4115X	V98X4110X	ET R LMB DOOR CLOSED IND 2	CLS 2	FA2
V56X4541X	V98X4153X	ET R LMB DR RDY-TO-LCH IND 1	RDY 1	FA3
V56X4542X	V98X4154X	ET R LMB DR RDY-TO-LCH IND 2	RDY 2	FA3
V56X4543X	V98X4155X	ET R LMB DR RDY-TO-LCH IND 3	RDY 3	FA3
V56X4550X	V98X4151X	ET R LMB DR LATCHED IND 1	LCH 1	FA3
V56X4560X	V98X4111X	ET R LMB DR LATCHED IND 2	LCH 2	FA2
V56X4650X	V98X4152X	ET R LMB DR LATCH REL IND 1	REL 1	FA3
V56X4660X	V98X4112X	ET R LMB DR LATCH REL IND 2	REL 2	FA2

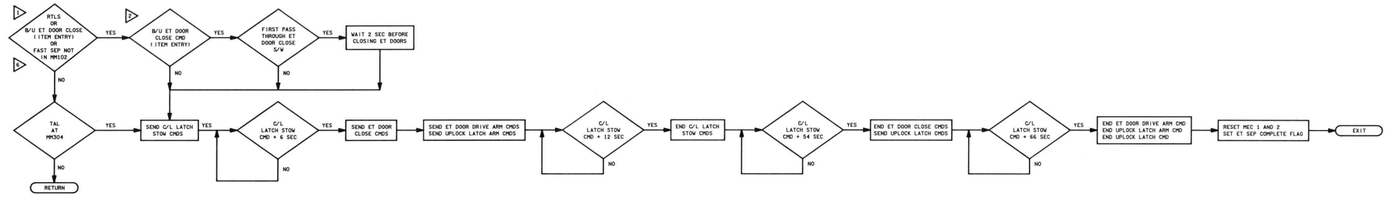

PASS SOFTWARE

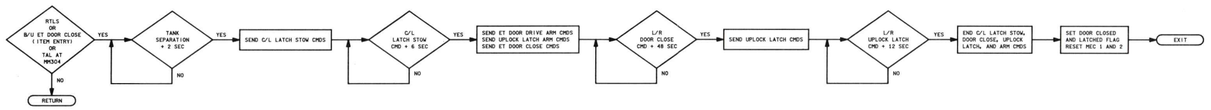

BFS SOFTWARE

▷ FAST SEP FLAG IS SET BY:
1. MANUAL ET SEP CMD IN MM102 OR MM601
OR
2. MANUAL ET SEP CMD IN MM103 WITH TWO MAIN ENGINES DOWN

▷ BFS G/L INDICATIONS NOT DEFINED ON DOWNLIST

4. FOR DRAWING REFERENCES SEE TABLE 15-I

3. MEC-MASTER EVENTS CONTROLLER

▷ SPEC 51 OVERRIDE DISPLAY IS AVAILABLE IN OPS 1, 3, AND 6

NOTES▷ SOFTWARE WILL AUTOMATICALLY CLOSE DOORS FOR AN RTLS DURING MM602

2 ET DOOR S/W 4

SIGNATURE	DATE	NATIONAL AERONAUTICS AND SPACE ADMINISTRATION LYNDON B. JOHNSON SPACE CENTER HOUSTON, TEXAS
DSGN B. J. TEDDER JR.	7/20/87	
DR		ET DOOR SOFTWARE PASS AND BFS OI20
ENGR DAN WALLACE		
ENGR		
APP	8/14/90	SPACE SHUTTLE / DWG NO 15.2
APP	10/31/90	ALL
CMH/PLAN S.E. Coordinator	10-5-90	66 X 34 / PAGE / SHEET 4 OF 4
LTR E / PCN		

BASIC REV E

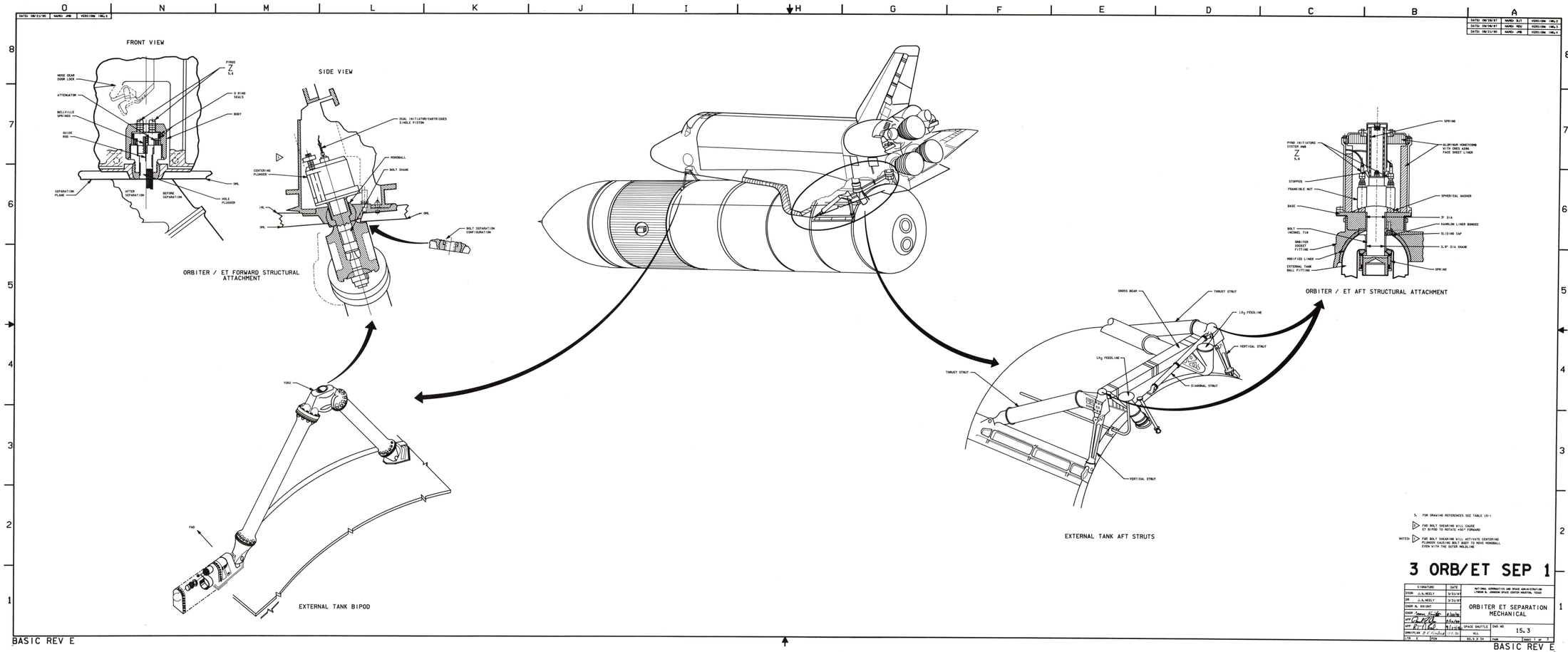
FRONT VIEW
SIDE VIEW
ORBITER / ET FORWARD STRUCTURAL ATTACHMENT
ORBITER / ET AFT STRUCTURAL ATTACHMENT
EXTERNAL TANK BIPOD
EXTERNAL TANK AFT STRUTS
3 ORB/ET SEP 1
ORBITER ET SEPARATION MECHANICAL
15.3
BASIC REV E

DATE: 8/8/97	NAME: RDS	ASSY/DR: ORL1
DATE: 08/22/95	NAME: JRB	VERS/DR: ORL1
DATE: 08/22/95	NAME: FSH	VERS/DR: ORL1

DATE: 08/22/95 NAME: FSH VERS/DR: ORL1

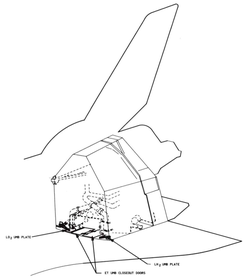

ORBITER AFT FUSELAGE

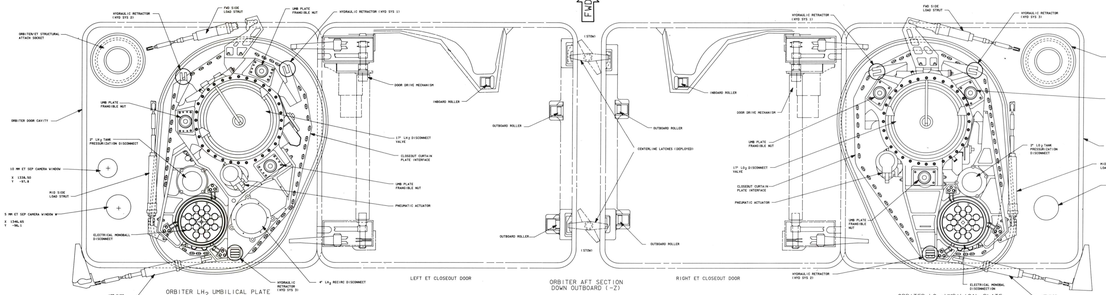

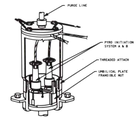

UMBILICAL PLATE ASSEMBLY ATTACHMENT DETAIL (TYPICAL)

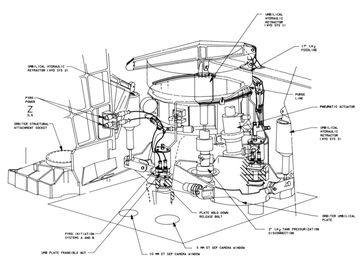

INBD AND FWD AT LH SIDE (LH_2) ROTATED 45° CCW

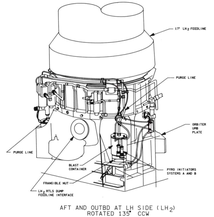

AFT AND OUTBD AT LH SIDE (LH_2) ROTATED 135° CCW

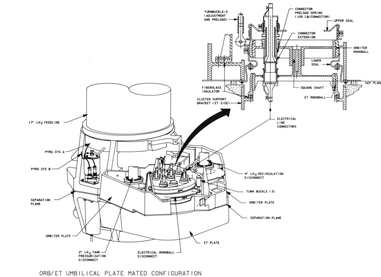

ORB/ET UMBILICAL PLATE MATED CONFIGURATION

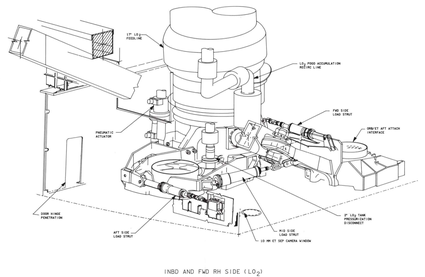

INBD AND FWD RH SIDE (LO_2)

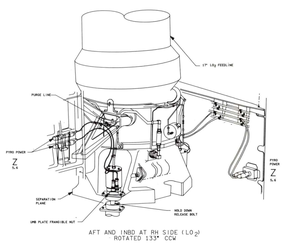

AFT AND INBD AT RH SIDE (LO_2) ROTATED 133° CCW

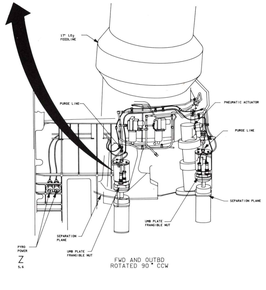

FWD AND OUTBD ROTATED 90° CCW

L FOR DRAWING REFERENCES SEE TABLE 15-1

3 ORB/ET SEP 2

NATIONAL AERONAUTICS AND SPACE ADMINISTRATION LYNDON B. JOHNSON SPACE CENTER, HOUSTON, TEXAS	SIGNATURE	DATE
	DSNA 313 - 98712	5/8/98
ORBITER ET SEPARATION MECHANICAL	DR	
	DAVID N. KNIGHT	
	CHIEF, Mission Analysis Branch	5/8/98
	Chief, Flight Design and Dynamics Division	5/8/98
	Manager, Space Shuttle Program	5/11/98

DWG NO	SPACE SHUTTLE	REV
15-3		
SHEET NO. OF	TYPE	CONTENT CODE
1 OF 1	15-3	2

BASIC REV E

BASIC REV E

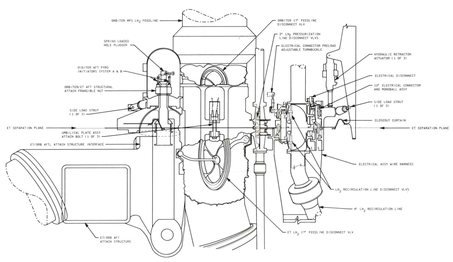

ORBITER/ET UMBILICAL PLATES MATED

SEPARATION SEQUENCE 4

- MPS ET FEED/RECIRC VALVES OPEN
- 4" LH2 RECIRC DISCONNECT VALVE OPEN
- 4" LH2 PRESURIZATION DISCONNECT VALVE OPEN
- UMBILICAL HYDRAULIC RETRACTORS EXTENDED
- ELECTRICAL MANDRELL DISCONNECTS MATED

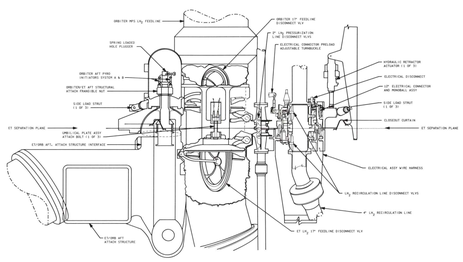

ORBITER/ET UMBILICAL PLATES MATED

SEPARATION SEQUENCE 4

- MPS ET FEED/RECIRC VALVES CLOSED

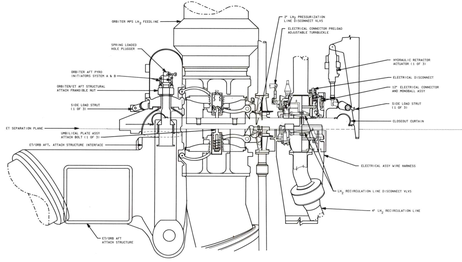

ORBITER/ET UMBILICAL PLATES RETRACTED

SEPARATION SEQUENCE 1,2

- UMBILICAL PLATES
  - ENGINEERS NUTS P-1402
  - BOLTS S13PL4032
- UMBILICAL HYDRAULIC RETRACTORS RETRACTED at 3.5 INCHES
- 4" LH2 RECIRC DISCONNECT VALVES CLOSED
- 4" LH2 PRESURIZATION VALVES CLOSED
- ELECTRICAL MANDRELL DISCONNECTS DEMATED

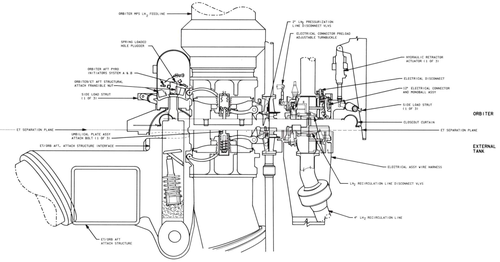

ORBITER/ET AFT STRUCTURAL SEPARATION

SEPARATION SEQUENCE 3

- BALL SOCKET INTERFACE
- TRUNNION BOLT NUT P-1402
- BOLTS S13PL4032

NOTES: 1. FOR DRAWING REFERENCES SEE TABLE R-I

3 ORB/ET SEP 3

SIGNATURE	DATE
PROGRAM MGR.	
SYSTEM ENGINEER	
OPS	
CHIEF ENGINEER	
DESIGN ENGINEER	
DESIGN ENGINEER	
APPROVED BY	
DRAFTSMAN	
CHECKED BY	

NATIONAL AERONAUTICS AND SPACE ADMINISTRATION
LYNDON B. JOHNSON SPACE CENTER, HOUSTON, TEXAS

ORBITER ET SEPARATION MECHANICAL

SPACE SHUTTLE | DWG NO. 15.3

SCALE | SHEET OF

BASIC REV E

DATE: 03/09/87	NAME: KEY	VERSION: MP1.0
DATE: 03/09/87	NAME: KEY	VERSION: MP1.0
DATE: 08/10/90	NAME: LAP	VERSION: MP1.1

DATE: 08/10/90 | NAME: LAP | VERSION: MP1.1

5 HATCH 1

NATIONAL AERONAUTICS AND SPACE ADMINISTRATION LYNDON B. JOHNSON SPACE CENTER, TEXAS		SIGNATURE	DATE
		CREW PUBS TL: 5000377	07/87
HATCHES (SIDE)		OR	
		CHAR. G. KRETKEE	
		CHARLES Godfrey	05/16/90
		APPROVED Jeff Hanford	07/16/90
DSE NO 15.5	SPACE SHUTTLE	APP. BY Jeff Hanford	05/16/90
	ALL	MANAGER, S & C Concept Dev.	
SHEET 1 OF 1 REV	10/1/87	08-6	DRAW

BASIC REV E

NOTES: 1/ FOR DRAWING REFERENCES SEE TABLE 15-1

HATCH MECHANISMS

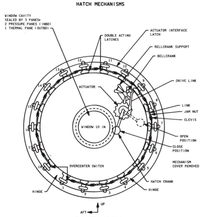

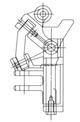

- HAS HOOKS CAM TO BREAK SEAL
- USED FOR LATCHES 11 AND 12

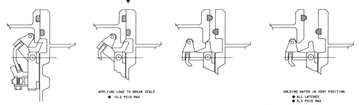

- ALL LATCHES
- 5.2 PSID MAX

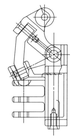

- USED FOR LATCH 10
- USED FOR LATCHES 1-9 AND 13-18

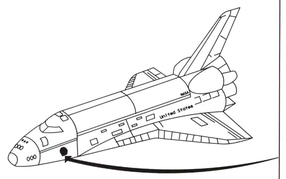

- STUDED FROM INSIDE THROUGH DOOR-QUARTER LATCH U-SUPPORT
- ARROW MUST POINT INTO RADIANCE (LATCHED INDICATION)

HATCH CONFIGURATION (INTERNAL)

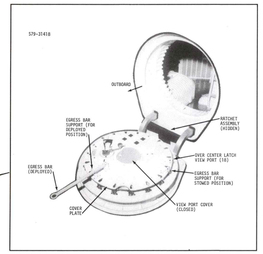

HATCH CONFIGURATION (EXTERNAL)

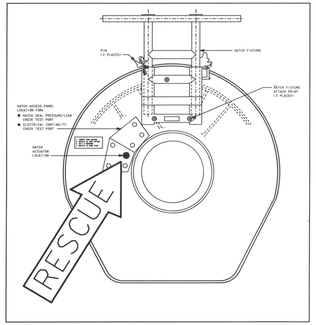

SIDE HATCH OPENING (INTERNAL)

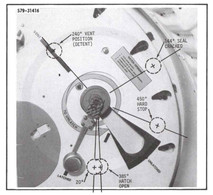

- ACTUATOR HANDLE SHOWN IN LATCHED/LOCKED POSITION
- PLUP LOCK LEVER OVER LOCK TO UNLOCK
- SNAP HOOK ON ACTUATOR HANDLE AND ROTATE CCW
  - 107° ROTATION - THE TWO LATCH KICKER CAMS START TO DISENGAGE THE SEALS
  - 144° ROTATION THE SEAL IS ENGAGED
  - 180° ROTATION - VENT DETENT POSITION (TRAILING HATCH +Y)
  - 650° ROTATION END OF ACTUATOR TRAVEL AND HARD STOP, HATCH OPEN

DSE HATCH T-HANDLE

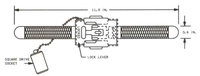

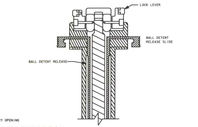

NORMAL SIDE HATCH OPENING/CLOSING (EXTERNAL)

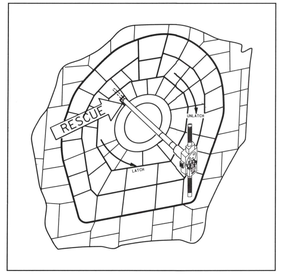

EMERGENCY SIDE HATCH OPENING (EXTERNAL)

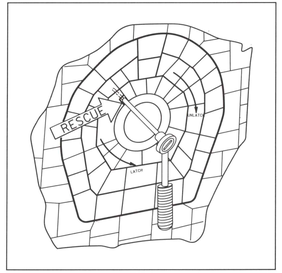

HATCH ELECTRICAL CONTINUITY CHECK OPERATIONS

- INSTALL GSE CONNECTOR
- REMOVE BOOT COVER FROM ELECTRICAL CONTINUITY TEST JACK
- CONNECT CABLE TO JACK (ASSURES THE SEAL PRESSURE/LEAK CHECK PORT IS SEALED)
- CHECK RESISTANCE ACROSS TEST PILOTS THREE AND FOUR (TP3, TP4) ARE ACROSS THE PRESSURE SEAL. IT SHOULD BE GREATER THAN 2 MILLI-MEGOHM (2 USED FOR THIS)
- RESISTANCE FOR BOTH TESTS = 0 OHMS , HATCH IS CONTINUOUS ELECTRICALLY - HATCH OPEN
- 5 CONNECT CABLE FOR ELECTRICAL CONTINUITY TEST JACK
- RE-INSTALL BOOT COVER

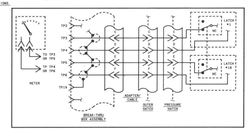

ELECTRICAL TEST SCHEMATIC

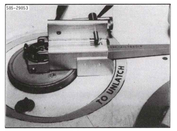

LATCH ACTUATOR LOCK GUARD

- INSTALLED POST-LANDING, REMOVED BEFORE ENTRY
- MUST BE REMOVED BEFORE HATCH OPENING TO ALLOW UNLOCKING OF LATCH ACTUATOR HANDLE

NORMAL OPEN/HO

- REMOVE TPS PLUGS 1-9 FOR HATCH ACCESS PANEL, 3 FOR HATCH FIXTURE)
- REMOVE HATCH ACCESS PANEL (4 SCREWS)
- ATTACH HATCH FIXTURE
- INSERT T-HANDLE/LOCK IN PLACE
- UNLOCK/UNLATCH HATCH
- PULL ON HATCH FIXTURE TO OPEN

NORMAL CLOSING

- WITH HATCH OPEN, LATCH AND LOCK HATCH USING HATCH ACTUATOR HANDLE
- REMOVE TPS PLUGS AND ACCESS DOOR
- ATTACH HATCH FIXTURE
- INSERT HATCH T-HANDLE/LOCK IN PLACE
- WITH HATCH T-HANDLE UNLOCK/UNLATCH HATCH
- SLIDE HATCH FIXTURE, CLOSE HATCH
- LATCH/LOCK HATCH
- VERIFY HATCH LOCKED AND LATCHED
- UNLOCK AND REMOVE T-HANDLE
- REMOVE HATCH FIXTURE
- INSTALLED ACCESS DOOR AND TPS PLUGS

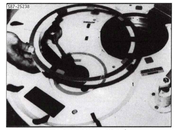

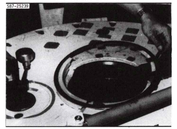

- UV FILTER USED ONLY ON OV-103 AND OV-104
- INSTALLED POST-LNDGTIONAL REMOVED BEFORE ENTRY
- MUST BE REMOVED BEFORE HATCH OPENING TO ALLOW FULL ROTATION OF LATCH ACTUATOR

EMERGENCY OPEN/HO

- IN A POST LANDING EMERGENCY, PUNCH THROUGH SMALL TILE ON HATCH WINDOW WITH A SHARP OBJECT (E.G. A 7/8 IN. OR 9/8 IN. SQUARE DRIVE) ACTS AT 16 IN. DIAMETER
- INSERT DRIVE EXTENSION IN SIDE HATCH RELEASE SOCKET
- PUSH TO UNLOCK AND ROTATE 1 1/4 TURNS CCW TO UNLATCH
- PULL HATCH TO OPEN

BASIC REV E

DATE: 10/06/90 NAME: CAR VERSION: VOL 5

SINGLE ACTING LATCH
- USED FOR LATCHES 1,3 AND 5 (INNER) 1, 3, 4 AND 5 (OUTER)

SINGLE ACTING LATCH
- HAS KICKER CAM TO BREAK SEAL
- USED FOR LATCHES 2, 4 AND 6 (INNER) 2 AND 6 (OUTER)

HATCH ALIGNMENT GUIDE
- FIVE MOUNTED AROUND EDGE OF HATCHES ON PLB TUNNEL SIDE
- ENSURES PROPER HATCH POSITION PRIOR TO LATCHING

MANUFACTURING ACCESS PANEL
- ALLOWS MULTIPLE AIRLOCK/TUNNEL ADAPTER CONFIGURATIONS
- PANEL BOLTS TO AFT BULKHEAD (324 ATTACHMENTS)
- BEAM SPLICES (352 ATTACHMENTS)
- AIRLOCK BOLTS TO ACCESS PANEL (72 ATTACHMENTS)

AIRLOCK CREW MODULE CONFIGURATION

AIRLOCK PLB CONFIGURATION

AIRLOCK TUNNEL ADAPTER CONFIGURATION

HINGE ARM — PRESSURE GAUGE

PORT FOR PRESSURE GAUGE ON OTHER SIDE OF HATCH — HINGE ARM — AIR DUCT FEED THRU

HATCH SWING — HANDHOLDS — LATCH ACTUATOR — HATCH SUPPORT STRUTS — HINGE ASSY — PIP PIN REMOVAL

HATCH SWING AND HOLD-OPEN MECHANISM (TYPE 1)

AIRLOCK CONFIGURATION	HATCH LOCATION	TYPE	HINGE MECHANISM	NO. OF LATCHES
AIRLOCK INSIDE CREW MODULE	INNER HATCH	A	ROTATES (TYPE 2)	6
	OUTER HATCH	B	SWINGS DOWN (TYPE 1)	6
AIRLOCK INSIDE PLB	INNER HATCH	B	SWINGS DOWN (TYPE 1)	6
	OUTER HATCH	B	SWINGS DOWN (TYPE 1)	6
SPACELAB AIRLOCK TUNNEL ADAPTER INSIDE PLB	INNER AIRLOCK HATCH	A	ROTATES (TYPE 2)	6
	EVA HATCH	C	SWINGS DOWN (TYPE 1)	6
	SPACELAB TUNNEL ADAPTER HATCH	B	SWINGS DOWN (TYPE 1)	12

HATCH SWING AND HOLD-OPEN MECHANISM (TYPE 2)

INNER HATCH PULLS OUT AND ROTATES COUNTER-CLOCKWISE TO OPEN

S80-28029

AIRLOCK HATCHES (PAYLOAD BAY SIDE)

S83-35399

TUNNEL ADAPTER HATCH

S80-28041

AIRLOCK OUTER/TUNNEL ADAPTER HATCH OPENING (FROM AIRLOCK/TUNNEL ADAPTER SIDE)
- PULL IN AND ROTATE DOWN ENGAGE LOCK-OPEN HOOK

S80-25152

ALL HATCHES UNLOCKING/UNLATCHING (FROM CREW MODULE/TUNNEL ADAPTER SIDE)
- ACTUATOR HANDLE SHOWN IN LATCHED/LOCKED POSITION
- FLIP LOCK LEVER DOWN 180° TO UNLOCKED POSITION
- SNAP PAWL IN HANDLE TO RETAIN LOCK IN
- 20° ROTATION — THE TWO LATCH KICKER CAMS START TO DISENGAGE THE SEALS
- 144° ROTATION THE SEAL IS CRACKED
- 450° ROTATION — END OF ACTUATOR TRAVEL AND HARD STOP; HATCH OPEN

S80-49152

AIRLOCK INNER HATCH OPENING (FROM CREW MODULE SIDE)

S79-38399

AIRLOCK INNER HATCH OPENING (FROM CREW MODULE SIDE)
- PULL OUT APPROX 6 INCHES
- PIVOT UPWARD AND TO THE LEFT
- STOW IN OVERHEAD STOWAGE
- SOME PIVS MAY BE REMOVED IF NECESSARY TO ENSURE PROPER MECHANISM WHEN CLOSING HATCH

THE TUNNEL ADAPTER HATCH IS A TWO-WAY PRESSURE HATCH, WHICH IS DESIGNED TO WITHSTAND A 14.7 PSID FROM EITHER DIRECTION (2 AIRLOCK/PRESSURIZED S/L MODULE, E.A. DURING EVA). THE OTHER HATCHES (AIRLOCK AND EVA) ARE ONE-WAY PRESSURE HATCHES WHICH HAVE 12 LATCHES BECAUSE THEY ARE DESIGNED TO HANDLE PRESSURE ONLY IN ONE DIRECTION

HANDRAIL/HOOK SCHEME FOR HATCH SWING AND HOLD MECHANISM IS ARBITRARY, USED FOR EASY REFERENCE IN HATCH CONFIGURATION TABLE

NOTES: 1. FOR DRAWING REFERENCES SEE TABLE 15-1

5 HATCH 2

SIGNATURE	DATE	NATIONAL AERONAUTICS AND SPACE ADMINISTRATION
DOUG WILSON / D. WILSON	9/24/91	LYNDON B. JOHNSON SPACE CENTER HOUSTON, TEXAS
JIM WILSON / J. HUNTER	9/30/90	
CHIEF, J. MATTIES		HATCHES (AIRLOCK AND SPACELAB)
APPROVED	10-30-90	
MANAGER,	10-30-90	
MANAGER,		SPACE SHUTTLE DWG NO. 15-5
MANAGER, E.V. PROGRAM		ALL
SCALE NONE		SHEET 5 OF 7

BASIC REV E

DATA 13:19:16 MARK VIII 10DEC96 BPL/L

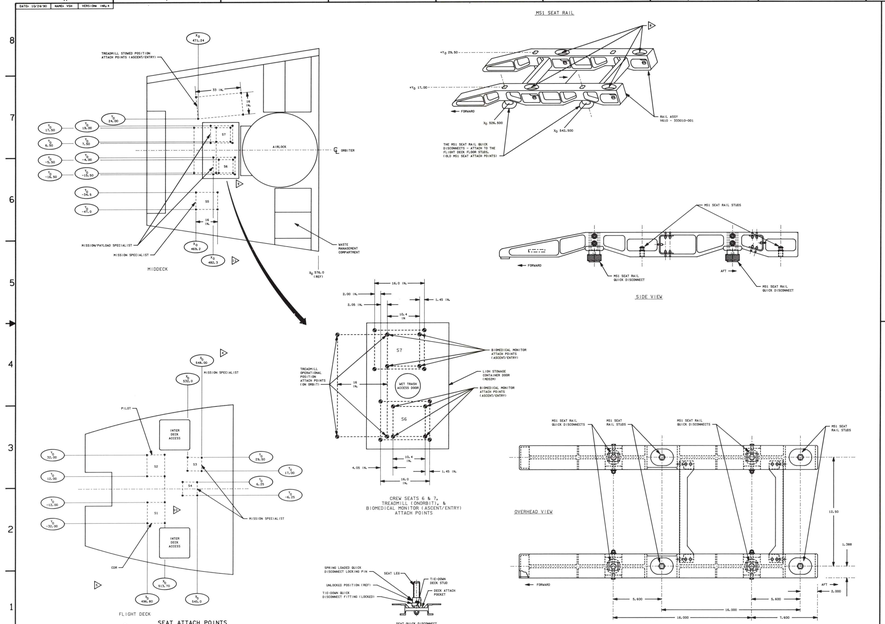

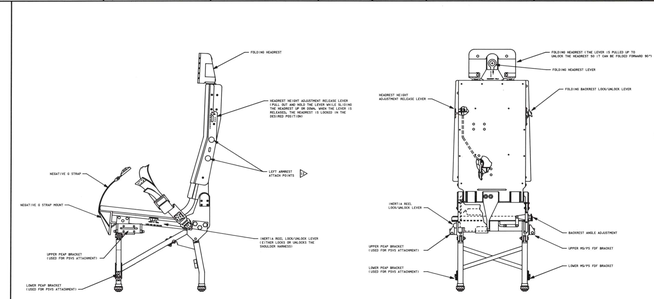

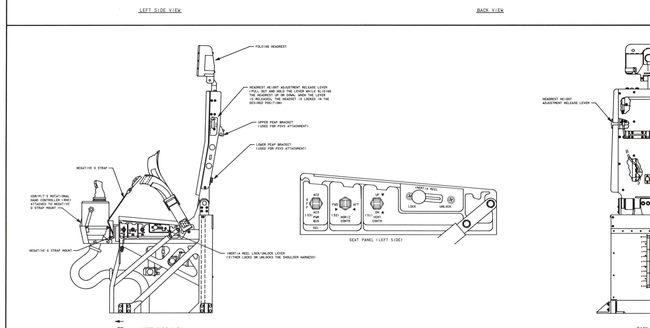

- ▷ LEFT ARMREST IS FLOWN ONLY ON SEAT 4
- ▷ AN ORDER FOR THE MIDDECK OVEN SEAT STUDS TO HAVE S_B 1288.4+0.762, -0.000 M (50.75+0.030, -0.000 IN) SHALL BE PLACED ON THE MIDDECK FLOOR IF A SEAT #4 IS ALSO ORDERED. THE S_B 1288.4+0.762, -0.000 M (50.75+0.030, -0.000 IN) MIDDECK SEAT STUDS CANNOT BE ADDED TO MEET FLT/GT THE SEAT & NOT STUD S_B 1288.4+0.762, -0.000 M (50.75+0.030, -0.000 IN) SEAT STUDS ARE REFERENCED
- ▷ THE FLIGHT DECK FLOOR SEAT STUDS CAN BE EASILY ADD/DEMO'D S_B 1288.4+0.762, -0.000 M (50.75+0.030, -0.000 IN) FROM THE FLIGHT DECK FLOOR MARK PANELS. TO S_B 91.440 M (3600.0 IN)
- ▷ EFFECTIVE STS-48 (91/09), 7A (91/09), 47F (91/04) & 51F (91/08) FOR LOWER PS/PS FDF BRACKET ATT. AND SEAT T HAS BEEN MOVED 1.7 FWD AND 0.7 TO THE RIGHT
- ▷ MSS RAIL SEAT BKHD DISCONNECTS ATTACH TO THE S_B 1288.4 M (50.75 IN) SEAT STUDS ON THE MIDDECK FLOOR. "A" ATT OF THE MSS RAIL SEAT ATTACH POINTS
- ▷ THE CDR'S, P.L.'S, MS1 SEATS FIT IN SEAT RAIL SLOTS ONLY. THE CDR'S SEAT RAILS HAVE BOLT HOLES FOR THE SEAT ATTACH BOLTS WHILE THE P.L.'S DO NOT
- ▷ REFER TO APC DRAWING M72-372 AND 3170 FOR SEAT DIMENSIONS
- ▷ PILOT AND COMMANDER SEATS PERMANENTLY INSTALLED
- ▷ RESCUE SEATS PROVIDED ONLY WHEN MCC035689
- ▷ THE SPECIALIST SEATS MAY BE REMOVED AND INSTALLED/RE-ATTACHED THE USE OF TOOLS FURNISHED ON ORBITER. THE SEAT ATTACH BOLTS (1.77) ARE ON EACH SEAT LEG, MAKE THE SEAT -15 DEGREES FROM THE DECK, 17.75 FOLDED AND STOWED
- ▷ IT'S OPTIONAL TO THE SEAT MANUALLY, CREATE THE MANUAL ADJUST LEVER AND A SET OF CONTROL ASSEMBLIES TO ALLOW THE CREW TO MANUALLY ADJUST THE SEAT. THE MOTOR AND BRAKES AT THE CLUTCH, ASSIST THE MANUAL ADJUST LEVER. THE SEAT IS ADJUSTED IN 2.5 CM INCREMENTS. MOST THE SEAT AT ONE TIME (ON LEFT) IS NECESSARY

NOTES: L. FLIGHT AND COMMANDER SEATS PERMANENTLY INSTALLED

6 CREW SEATS 1

SIGNATURE	DATE
DOUG L.N. HURTUBISE	10-17-96
DR. L.N. 'BJ' BLANCHARD	10-17-96
DOUG L. MALKASIAN	

NOTICE: PROPRIETARY DATA

		SPACE SHUTTLE	DWG NO
			15.6
		SCALE	SHEET

BASIC REV E

DATE= 10/24/90	NAME= YSH	VERSION= 1REL3

DATE= 10/08/90	NAME= SEK	VERSION= BPS1.5
DATE= 10/23/90	NAME= SEK	VERSION= BPS1.5
DATE= 10/24/90	NAME= YSH	VERSION= 1REL3

CDR/PILOT SEAT HORIZONTAL AND VERTICAL CONTROLS

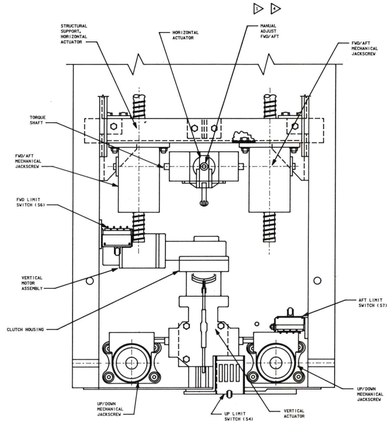

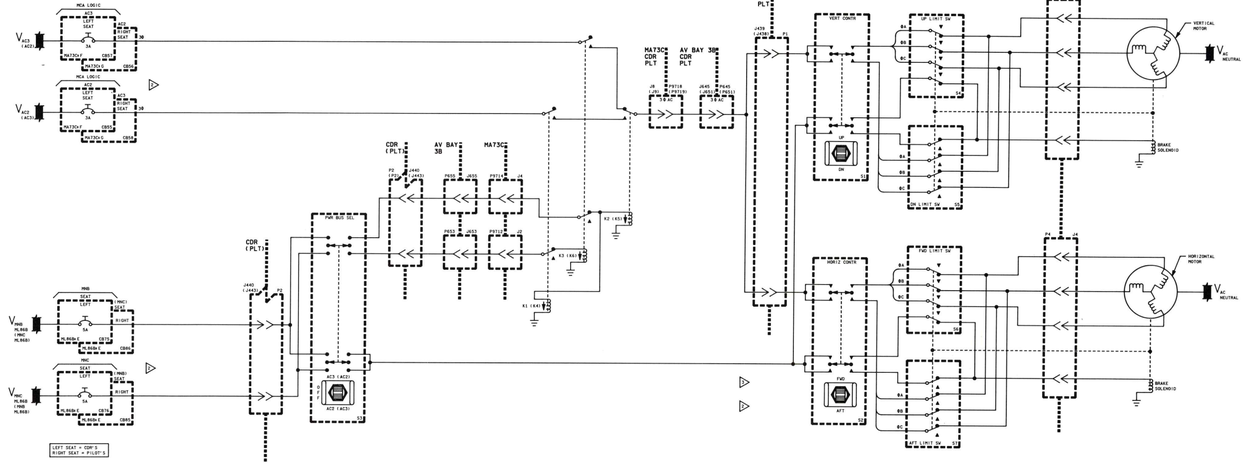

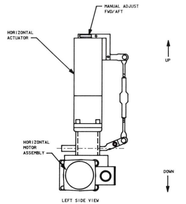

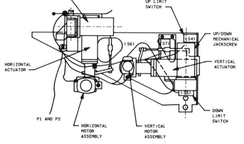

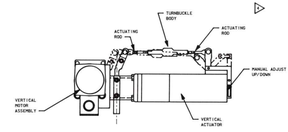

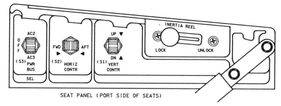

PLUGS CDR (PILOT)	PART # 1	LOCATION
30959A32F11 (30959A32F21)	MB0010-100NT3	FLIGHT DECK FLOOR- 10.78" AFT OF THE FORWARD SEAT TIE-DOWN POINTS ON THE SEAT CENTERLINE
30959A32F17 (30959A32F27)	MB0010-60NT2	FLIGHT DECK FLOOR- 6.58" AFT OF THE FORWARD SEAT TIE-DOWN POINTS AND 4.15" TO THE LEFT OF THE SEAT CENTERLINE
30959A32F3 (30959A32F23)	MB0010-60NT2	VERTICAL MOTOR
30959A32F4 (30959A32F24)	MB0010-60NT2	HORIZONTAL MOTOR

SEAT DATA

1. VERTICAL TRAVEL RANGE = 10.00 ± .10"
2. HORIZONTAL TRAVEL RANGE = 5.00 ± .10"
3. SEAT SPEED: .75 ± .25"/SECOND FOR BOTH THE HORIZONTAL AND VERTICAL ADJUSTMENTS AT AMP POINT IN THE SPECIFIED TRAVEL RANGE

5. REFER TO TABLE 15-1 FOR DRAWING TRACEABILITY

2 DURING MANUAL SEAT ADJUSTMENT , THE USE OF THE MANUAL SEAT ADJUSTMENT TOOL (4 3/16 - INCH HEX HEAD DRIVER) DISENGAGES THE VERTICAL (HORIZONTAL) DRIVE MOTOR FROM THE VERTICAL (HORIZONTAL) ACTUATOR BY DISENGAGING THE VERTICAL (HORIZONTAL) CLUTCH

3 RELAYS K1, K2, K3 ARE IN THE CDR'S (LEFT) SEAT ASSEMBLY& RELAYS K4, K5, K6 ARE IN THE PILOT'S (RIGHT) SEAT ASSEMBLY

4 SWITCHES S1, S2, S3, S4, S5, S6, S7 ARE FOUND BOTH IN THE CDR'S AND PILOT SEAT ASSEMBLIES

NOTES: 6 IN THE EVENT OF AN ELECTRICAL FAILURE, THE CREW SEATS MAY BE ADJUSTED UP/DOWN OR FWD/AFT USING A MANUAL SEAT ADJUSTMENT TOOL (4 3/16 - INCH HEX HEAD DRIVER) THAT IS NORMALLY STOWED IN THE 19TH TOOL LOCKER.

6 CREW SEATS 2

SIGNATURE	DATE	NATIONAL AERONAUTICS AND SPACE ADMINISTRATION LYNDON B. JOHNSON SPACE CENTER HOUSTON, TEXAS
DSGN L.A. PARTINDALE	9-1-88	
DR L.A. PARTINDALE	9-2-88	
CHKR T. MACKELVAIN		CREW SEATS MECHANICAL/ELECTRICAL
CHIEF [signature]	11-2-88	
APP [signature]	11-2-88	
MGR [signature] for R.W. RICHARDS	11-2-88	
SPECIFICATION [signature]	11-2-88	SPACE SHUTTLE DWG NO 15.6
ITR 1	SPEC	SCALE NONE SHEET 2 OF 2

BASIC REV E

BASIC REV E

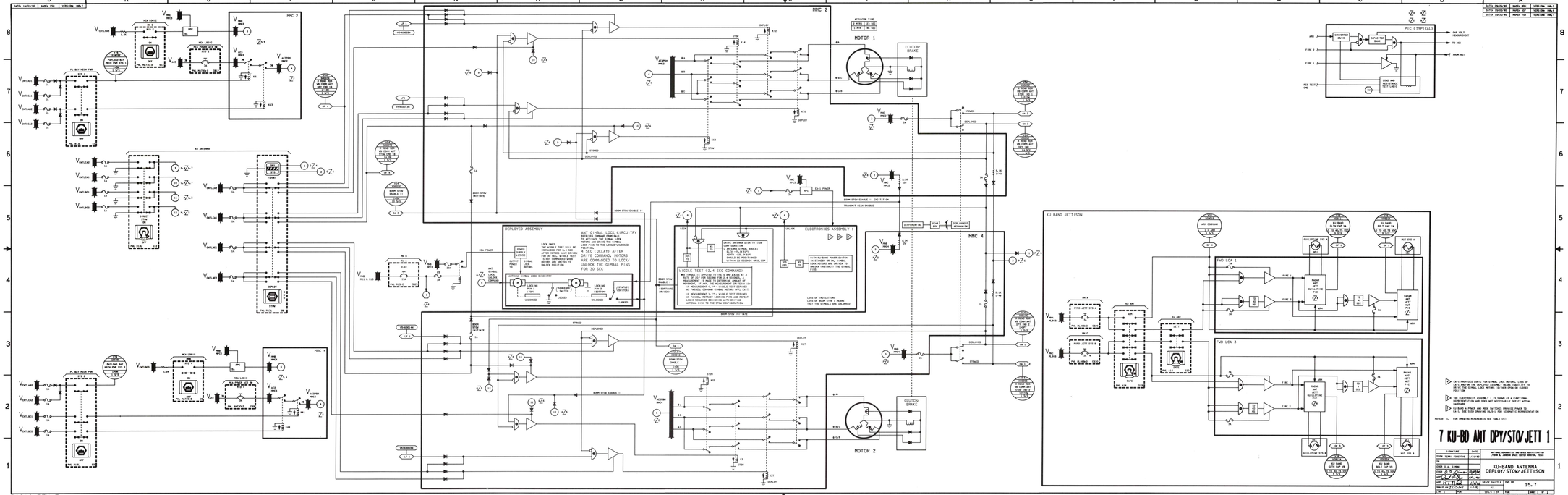

7 KU-BD ANT DPY/STO/JETT 1

SIGNATURE	DATE	
DSN TEAM: FUNCTIONAL	1/31/83	NATIONAL AERONAUTICS AND SPACE ADMINISTRATION LYNDON B. JOHNSON SPACE CENTER HOUSTON, TEXAS
DR		
DRAW R.L. Simon		KU-BAND ANTENNA DEPLOY/STOW/JETTISON
DSN R.O. Simon	1/31/83	
DSN R.L. Simon	1/31/83	
DSN R.T. Hill	1/31/83	SPACE SHUTTLE
DSN/PLAN J.C. Chase	1/31/83	ALL
SIZE	DSN	DWG NO 15.7
		SCALE 1 IN = 1 IN
		SHEET 1 OF 1

BASIC REV E

KU BAND ANGLE AND AXIS COORDINATES

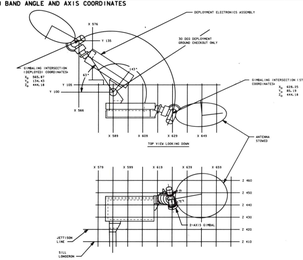

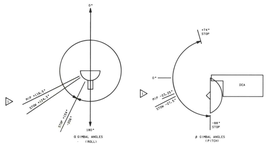

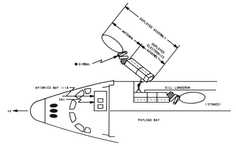

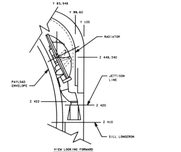



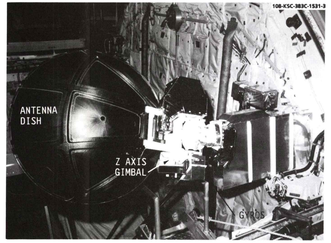

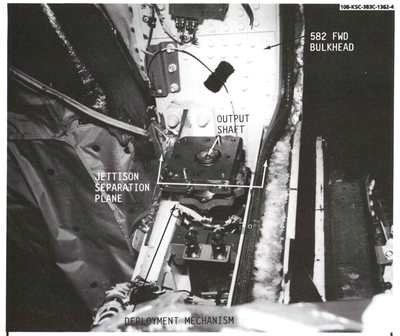

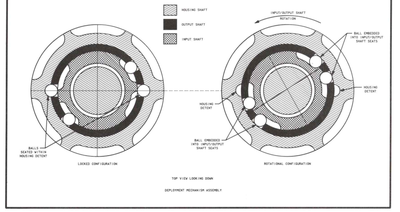

KU BAND JETTISON SYSTEM

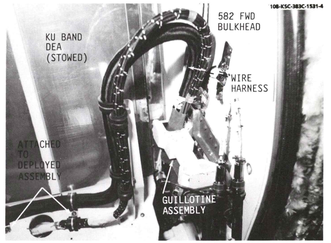

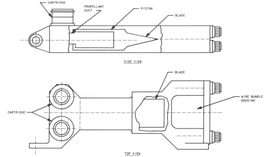

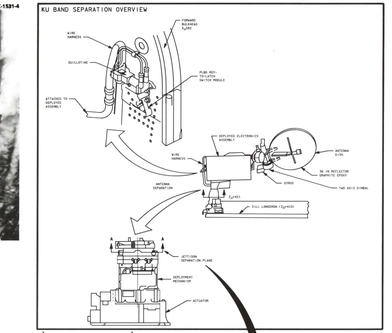

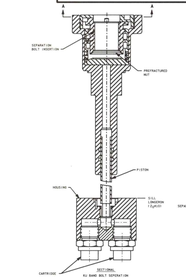

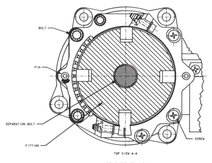

GIMBAL MECHANISM

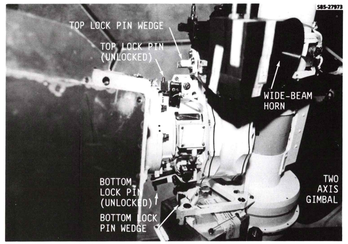

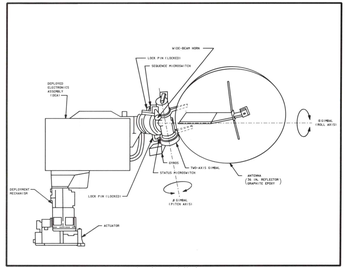

THE ANTENNA HAS A FALSE LOCK-UP, I.E. A PHOTO SLOWS WHICH INDICATES ANTENNA LOCK-UP BEFORE IT ACTUALLY DOES. THIS IS CAUSED BY THE SHAPE OF THE DEA WHICH INTERFERES WITH THE CORRECT ANTENNA LOCK-UP.

NOTE: FOR GIMBALING REFERENCES REFER TO TABLE 1.0-1

7 KU BAND MECH

SIGNATURE	DATE
CDR: BARBARA BEARD	8/8/83
SM: BARBARA BEARD	8/8/83
CHIEF: G.G. SCHMID	
CHAIR: D.D. CLARK	8/8/83
MGR: J.W. ALLEN	8/8/83
MGR: R.H. BRANN	8/8/83
MGR: P.J. CLARKE	8/8/83

NATIONAL AERONAUTICS AND SPACE ADMINISTRATION	
GEORGE C. MARSHALL SPACE FLIGHT CENTER, HUNTSVILLE, ALABAMA	
SPACE SHUTTLE	PAGE NO.
KU	15.7
SUB-SYS NO.	SUBJECT
15	KU BAND MECHANICAL

BASIC REV E

BASIC REV E

PASS/ONLY
MECHANICAL SOFTWARE

KBD/DEU

USER INTERFACE (UI)
- ROUTES INPUT COMMANDS FROM THE KEYBOARD, GROUND, AND OTHER COMPUTERS
- PERFORMS INITIATION, SEQUENCING, AND TERMINATION OF APPLICATION AND SYSTEM SERVICES

ASCENT_OPS_CONTROL_SEGMENT GO3 (GOA_ASCENT_OPS)
3.3.3.1
- WILL_ASCENT_OPS (GO1) IS SCHEDULED FOR ONE TIME EXECUTION BY A USER INTERFACE PROGRAM
- GO3 DIRECTS THE EXECUTION OF FUNCTIONS WITHIN THE ASCENT OPS MAJOR MODES: CONTROL OVER TERMINAL COUNT (GOA_ASCENT_TC) OPS 1 (INSERTION-1) OPS 2 (INSERTION-2) OPS 3 (INSERTION-3 DOAST-1106) IS PROVIDED
- GO3 IS SCHEDULED BY GO1 OR GO2 OR GO3 BEFORE LAUNCH AND CONTINUES THROUGH THE ATTAINMENT OF SAFE ORBITAL CONDITIONS OR UNTIL THE RTLS OPS OR THE ENTRY OPS IS INITIATED DURING AN ABORT CONDITION OR UNTIL THE PRE-COUNT OPS 1 IS ENTERED BEFORE LIFTOFF
- GO3 IS SCHEDULED BY THE EXECUTIVE (GOE) SERVICE IS SCHEDULED FOR CYCLIC EXECUTION AT 25 HZ WITH AUTOMATIC INPUT
  - CALL GOS_CS__CON__PROC
  - CALL GFL__WA__INIT

CONTROL_SEGMENT_COMMON_PROCESSOR GO5 (GOL_CS__CON__PROC)
3.4.4.2
- THE CONTROL SEGMENT COMMON PROCESSOR (GO5) IS INVOKED BY A CALL FROM AN OPS ON A SPEC CONTROL SEGMENT
- GO5 PERFORMS THE FOLLOWING CONTROL SEGMENT FUNCTIONS:
  - OPS ONLY CLEANUP
  - KEYBOARD PROCESSING (ITEMS OR 'EXEC' COMMAND)
  - SPEC CONTROL INITIALIZATION
  - SPEC INITIALIZATION
  - SPEC CLEANUP

ENTRY_OPS_3__CONTROL_SEGMENT GO3 (GOL_ENTRY_OPS3)
3.3.3.1
- THE ENTRY OPS 3 CONTROL SEGMENT (GO3) IS SCHEDULED FOR NON-CYCLIC EXECUTION BY THE GO2-INTERFACE WHEN THE CREW REQUESTS OPS 303 VIA THE KEYBOARD IN PREPARATION FOR RETURN FROM ORBIT
- GO3 MAY BE SELECTED FROM THE ORBIT OPS CONTROL SEGMENT, FROM THE ASCENT OPS CONTROL SEGMENT, FROM IDLE OPS, OR, IN THE EVENT OF AOA OR ATO, OR ABORT, FROM THE ASCENT OPS CONTROL SEGMENT
- ENTRY GUIDANCE IS EXECUTED AT 25 HZ USING PREDEFINED RATES AND PRIORITIES
- GO3 IS TERMINATED BY CREW SELECTION OF THE ORBIT OPS, IDLE OPS, OR THE PREFLIGHT OPS
  - CALL GUS__CS__CON__PROC
  - CALL GFU__MA__INIT
  - CALL GDN__EDN__STG__MFE

MA_DATA_BASE_INITIALIZATION GFU (GFU_MA__INIT)
3.15.1.15
- THE MA INITIALIZATION MODULE IS CALLED ONCE AT THE BEGINNING OF OPS 1, OPS 3 BY THE RESPECTIVE OPS CONTROL SEGMENT (GO1, GO3)
- THIS MODULE ALLOWS FOR COMMON MA PROCEDURES TO ACCESS REDUNDANT INPUT DATA

ASCENT_TAL_VENT_DOOR_CONTROL_ SEQUENCER GO3 (GOL_ASC_VENT_SEQ)
3.4.5.1
- GO3 IS ACTIVE DURING OPS 1 AND OPS 3
- IF VENT DOORS ARE NOT OPEN, THEN ISSUE COMMAND
- IF VENT DOORS ARE NOT CONFIGURED FOR LAUNCH RTLS HOLD
- IN MM 102 OR SEC, AND IN MM 602+ INITIATE ALL VENT CLOSE COMMAND
- IF MET > 100 SEC, AND IN MM 103 OR MM 104, LT TAL ABORT AND ET SEP CMD FLAGS ARE BOTH SET= INITIATE ALL VENT CLOSE COMMAND, AT MM 304 TRANSITION, GO TO MM 602 AND INITIATE ALL VENT CLOSE
- IN MM 602 (AFTER ALL VENT CLOSE COMMAND), IF OPEN OR CLOSE ITEM ENTRY IS ISSUED= INITIATE ALL VENT OPEN OR CLOSE COMMAND
- IN MM 602 OR MM 603, IF GROUND RELATIVE VELOCITY IS GREATER THAN 2 FPS= INITIATE ALL VENT OPEN COMMAND
- IN MM 603, IF OPEN ITEM ENTRY IS ISSUED= INITIATE ALL VENT OPEN COMMAND
- IN MM 603 PRIOR TO ROLLOUT= A CLOSE ITEM ENTRY IS ILLEGAL
- IN MM 603 AFTER ROLLOUT, IF OPEN OR CLOSE ITEM ENTRY IS ISSUED= INITIATE ALL VENT OPEN OR CLOSE COMMAND

ASCENT_TAL_HIGH_FREQUENCY_ EXECUTIVE GO3 (GOL_ASC_RTLS__MFE)
3.4.5.1
- GO3 WILL EXECUTE FOR THE DURATION OF OPS 1 AND, IF SELECTED, OPS 6 AFTER BEING SCHEDULED BY GO1
- CONTROLS THE EXECUTION OF ALL MODULES DIRECTLY RELATED TO FLIGHT AND THE HIGH RATE MODULES NOT DIRECTLY RELATED TO FLIGHT
- WHEN IT IS TIME FOR THE ASSIGNED HIGH FREQUENCY EXECUTIVE TO BE ACTIVATED, FDSS INITIATES AN AUTOMATIC REQUEST FOR THE USED BY MODULES ASCENT_TAL_HIGH_FREQUENCY_EXECUTIVE
- WHEN THIS READ IS COMPLETE THE GO4 IS GIVEN CONTROL=
  - CALL GSL_ASC__VENT__SEQ
  - CALL GOT__ET__SEP
  - CALL GSL_ASC_RTO
  - CALL GP__LAND_HAL_SOP
  - CALL GSL_ASC_RTLS_SOP
  - CALL GSL_RTLS_STG_MFE
  - CALL GOA_GRTLS_P__R__Y__W__PS HZ
  - CALL GP__SPEC__CONT__SOP
  - CALL GSL_ADRS_ASC_STG_MFE

ENTRY_HIGH_FREQUENCY_EXECUTIVE GOP (GOP_ENTRY_MFE)
3.5.5.1
- GOP IS ACTIVE FOR THE DURATION OF OPS 3 AFTER BEING SCHEDULED BY GO3
- CONTROLS THE EXECUTION OF ALL MODULES DIRECTLY RELATED TO FLIGHT CONTROL OR OTHER HIGH RATE MODULES NOT DIRECTLY RELATED TO FLIGHT CONTROL=
  - CALL GP__LAND_HAL_SOP
  - CALL GSE_RTO_STG_FDI
  - CALL GSE_RTO_STG_SOP
  - CALL GSC_VENT_DOOR
  - CALL GSA_RTO_STG_LND__BRK_CMD
  - CALL GSE_ADRS_RTO_STG_FDI
  - CALL GSC_ADRS_RSLS_TAK_WA_S_FDI
  - CALL GPS_ELVN_PTS_COMP__SOP
  - CALL GSN_EDN_ENT_STG_MFE
  - CALL GOP_ADRS_DAP_PRL

ASCENT_HIGH_FREQUENCY_ EXECUTIVE GOE (GOL_ASC_RTLS_MFE)
3.4.5.1
- GOE IS A NON-CYCLIC FUNCTION CALLED BY THE GEA WHEN A DISPATCHER TABLE CHANGE REQUEST HAS BEEN RECOGNIZED DURING OPS 1
- GOE IS SCHEDULED BY THE KEY STATE RADIO AND RATE OF EXECUTION IS ELEMENTS DISPATCHED FROM THE DISPATCHER TABLES OF THE GEA
- GOE ALSO PROVIDES INITIALIZATION AT VARIOUS POINTS OF THE AUTO PROCESSING SEQUENCE START IS INDICATED, BY THE GEA, BY THE SETTING OF THE RTLS FLAG IN THE HYDRAULIC SYSTEM FDI (GOD) AND ACTIVATED
- WHEN MCO0 IS CONFIRMED, THEN SPB IS DEACTIVATED IN ITS M2 PROCESSING AND IS ACTIVATED FOR DISPATCHING

ENTRY_HIGH_FREQUENCY_EXECUTIVE GOH (GOL_EDN_ENT_STG_MFE)
3.4.5.1
- GOH IS CALLED BY GO3 UPON ENTRANCE TO OPS 3 PRIOR TO SCHEDULING GOP
- GOH IS ALSO CALLED BY GOP WHEN A DISPATCHER TABLE CHANGE REQUEST IS RECOGNIZED
- GOH PERFORMS MAJOR MODE TRANSITION PROCESSING AND ADJUSTS ACTIVITY STATUS AND THE RATE OF EXECUTION OF MODULES AS REQUIRED FOR THE NEW MM
- IF TAL LANDING SITE SELECTED MAY BE ACTIVATED DUE TO TAEM BOUNDARY FLAG, OPT IS ACTIVATED IN THE DISPATCHER TABLE

EXTERNAL_TANK_SEPARATION_ SEQUENCER GO3 (GOL_ET__SEP)
3.4.5.1
- THE EXTERNAL TANK SEP SEQ (GO3) MAY BE ACTIVE DURING OPS MM 102, 103, 104, 105, 106, OR RTLS (MM 601)
- MONITOR ET SEP CMD FLAG TO DETERMINE IF SEPARATION IS COMMANDED
- TERMINATES UMBILICAL DOOR CENTERLINE LATCH LOCK COMMANDS TO ALLOW CLOSURE OF THE UMBILICAL CLOSE OUT DOORS
- AFTER A SPECIFIC TIME DELAY, IF A PAST SEP IS NOT RECEIVED, THE SEQUENCE DETERMINES IF AT LEAST A MAJORITY INDICATES THE LATCHES ARE UNLOCKED AND UNPRESSURIZED, THEN THE FEEDLINE DISCONNECT VALVES ARE CLOSED
- IF THE SEQUENCE EXCEEDS AN ELAPSED TIME FOR THE FEEDLINE DISCONNECT VALVES TO ALLOW TIME TO FULLY CLOSE BEFORE CONTINUING
- THE ET SEP SEQUENCE ARMS THE ET/ORB STRUCTURAL LATCH PYRO FIRING COMMANDS AND, AFTER A TIME DELAPSE SINCE THE UMBILICAL RETRACT FIRE COMMAND WERE ISSUED
- THE MEC ISSUES COMMANDS TO THE UMBILICAL PLATE HYDRAULIC RETRACT ACTUATORS AFTER SEPARATION HAS BEEN CONFIRMED BY THE ET SEP SEQUENCE
- THE TIME DELAY ALLOWS TIME FOR THE LSO AND LIO UMBILICAL PLATES TO RETRACT AND LATCH
- IF THE LATCHES ARE NOT CONFIRMED LATCHED AND PARAMETERS FAIL TO SATISFY THE LIMIT TEST REQUIREMENTS, THE CREW IS ALERTED AND THE SEQUENCE INHIBITS AUTO SEP FROM OCCURRING
- THE AUTO/MANUAL ET SEP SWITCH AND CURRENT MM ARE USED IN DETERMINING WHAT SEPARATION MODE IS TO BE EMPLOYED
- WHEN RTLS ABORT IS REQUESTED, THE UMBILICAL DOORS ARE CLOSED AND LATCHED WHEN POSSIBLE. THE LSO AND LIO DOORS ARE CLOSED, AND THE UMBILICAL DOORS ARE LATCHED ALL WITH PROPER TIMING CONSTRAINTS

RTLS_HYDRAULIC_SYSTEM_LANDING_ GEAR_CONTROL_SEQUENCE GSS (GOL_ASC_HYD)
3.4.5.10
- GSS IS ACTIVATED ON TRANSITION TO MM 603 BY THE GEA
- THIS MODULE IS USED DURING AN RTLS ABORT TO PROVIDE AUTOMATIC CONTROL OF THE THREE HYDRAULIC SYSTEM LANDING GEAR ISOLATION VALVES
- WHEN ACTIVATED AND IF GROUND RELATIVE VELOCITY IS LESS THAN 2 800 FPSH HYD SYS 1/3 LG ISO VALVES CMD
- GSS WILL ALSO SIGNALS TO TERMINATE THE HYD SYS LG CONTROL SEQUENCE

RTLS_GAP_ENTRY_PITCH/ROLL/YAW_CHANNEL_ SEQUENCER GOA (GOL_RTLS_P__R__Y__W__DAP)
3.11.1.5
- GRTLS_DAP (GOA) IS ACTIVATED AT INITIATION OF RTLS ENTRY (MM 602) BY THE GEA AND IS ACTIVE IN MM 603
- IF THE GROUND FLAG IS ON, PERFORM THE FOLLOWING=
- IF THE ROLL/YAW CONTROL MODE IS AUTO/BANK THEN
  - FOR MANUAL LAND/HOH
    - IF THE ROLL/YAW COMMAND IS CSS__BANK, THEN COMPUTE THE PRELIM/HARRY NOSEWHEEL COMMAND (PRELIM_DEF) AND SCALE IT (YWTR__MKS)
    - (YWTR= RUDDER PEDALS AND AXS)
  - FOR AUTOLAND=
    - COMPUTE THE YAW RATE ERROR BY COMBINING THE YAW RATE IN STABILITY AXES WITH THE BUFFERED YAW RATE COMMAND
    - COMPUTE THE PRELIM/HARRY NOSEWHEEL COMMAND BY APPLYING A SECOND ORDER FILTER TO THE YAW RATE ERROR
- COMPUTE THE NOSEWHEEL COMMAND BY FADING AND LIMITING THE PRELIM/HARRY NOSEWHEEL COMMAND
- SCALE AND BIAS THE NOSEWHEEL COMMAND FOR THE HARDWARE

AERO_SURFACE_ACTUATORS_ COMMAND_SOP GPC (GOL_AERO_ACT_CMD__SOP)
3.10.2.1
- THE AERO ACTUATOR COMMAND SOP (GPC) PERFORMS THE FOLLOWING FUNCTIONS: ISSUES AERO SURFACE CONFIGURE COMMANDS IN PREPARATION TO THE CONFIGURED=NO ACTUATORS.
- GPC IS CALLED BY GPT DURING MAJOR MODES 301-303 TO PERFORM APPROPRIATE COMMANDS NEEDED TO THOROUGHLY CONDITION THE HYDRAULIC SYSTEM

AERO_SURFACE_ACTUATORS_ COMMAND_SOP GPC (GOL_AERO_ACT_CMD__SOP)
3.10.2.1
- THE LANDING SOP (GPC) IS ACTIVATED UPON TRANSITION TO MM 603 AND PERFORMS LANDING IN MM 603 AND 602
- IF THIS IS ONE OF THE FIRST TWO PASSES THROUGH LANDING__SOP, IF ANY WEIGHT-ON-WHEELS DISCRETES ARE SET, AND NO WEIGHT-ON-WHEELS DISCRETES ARE SET, AND NO COMPATIBLES EXISTS, SET THE APPROPRIATE ERROR FLAGS
- IF EITHER THE ET SEP OR THE SRB SEP PANEL SWITCH IS ON, THEN SET THE WOW INITIATE FLAG ON
- IF THE MAIN GEAR WOW DISCRETES INDICATE BOTH RIGHT COMPAULT BITS ARE OFF, THEN PERFORM THE FOLLOWING
  - IF THE MAIN GEAR WOW DISCRETES DO NOT MATCH, THEN SET THE WOW DISAGREE FLAG AND INCREMENT THE GEAR DISAGREE COUNTER , AND IF THE COUNTER IS GREATER THEN 45 CYCLES, THEN SET THE WOW DISCREPANCY FLAG ON
  - IF THE MAIN GEAR WOW DISCRETES MATCH, THEN ZERO THE GEAR DISAGREE COUNTER
  - IF MAIN GEAR WOW DISCRETES INDICATE WEIGHT-ON-WHEELS, AND NO COMPAULTS EXIST FOR THE NOSE GEAR, AND NO WEIGHT-ON-WHEELS DISCRETES SHOW WEIGHT-ON-WHEELS GEAR, THEN SET THE WOW DISCREPA FLAG ON, ELSE, CLR. NO WEIGHT-ON-WHEELS GEAR, INCREMENT THE WOW COUNTER
- IF EITHER MAIN GEAR COMPAULTS ARE ON= DO NOT UPDATE THE WOW COUNTER, AND SET THE WOW DISCREPA FLAG
- IF THE FLATSPIN FLAG IS OFF, AND EITHER WOW INITIATE FLAG IS ON OR THE WOW COUNTER IS ≥ 4 CYCLES, THEN PERFORM THE PROPER INITIALIZATIONS AND SET THE FOLLOWING= FLATSPIN AND WOW/ON FLAGS, HYD SHADOW ENABLE WOW/ON FLAG, AND WOW/ON INDICATORS, AND THE NFE GTU FLAG
- IF THE FLATSPIN FLAG IS ON, THEN DO THE FOLLOWING= IF THE WOW INITIATE FLAG IS ON, THEN SET THE WOW WILL DELAY FLAG ON, OTHERWISE INCREMENT THE COUNTER
- SET THE WOW/ON FLAG TO SHOW AT LEAST ONE CYCLE HAS PASSED IN THE WOW/ON MODE
- IF THE WOW/ON FLAG IS ON, THE MAIN GEAR, AND THE LEFT AND RIGHT COMPAULTS ARE OFF, THEN=
  - IF THE NOSE GEAR WOW DISCRETES DISAGREE, THEN INCREMENT THE NOSE GEAR WOW DISAGREE ERROR COUNTER, AND IF THE DISAGREE COUNTER ≥ THE THRESHOLD SET THE NOSE GEAR ERROR FLAG ON
  - IF THE NOSE GEAR WOW DISCRETES AGREE, THEN ZERO THE DISAGREE COUNTER, AND IF THE WOW DISCRETES SHOW WEIGHT-ON-WHEELS, SET THE WOW FLAG ON, ELSE THEN THE WOW FLAG OFF
- IF THE ROLLOUT FLAG IS OFF, CHECK TO SEE IFA ROLLOUT HAS JUST BEEN PASSED STARTING AND SET ON = ESTABLISH WOW= INITIATE FLAG IS ON OR THE WOW FLAG IS ON
- IF THE PRECEDING CONDITIONS HAVE BEEN MET= SET THE ROLLOUT FLAG ON, SET THE ROLLOUT MM FLAG TO THE DTO MM, SET THE HUD ROLLOUT FLAG ON, ISSUE HYD SYS 3 LANDE GEAR ISO VALVE OPEN COMMAND, TRIGGER THE ROLLOUT PROCESSING, AND IF AUTO__BANK, THEN SET BATH=70 DEPN, ELSE SET THE HOTO=.080
- IF THE ROLLOUT FLAG IS ON, A CYCLE COUNTER IS INCREMENTED UNTIL 5 OR MORE SECONDS HAVE PASSED, AND THE HYD SYS 3 LAND ISO VALVE OPEN COMMAND IS TERMINATED

HYDRAULIC_SYSTEM_FDI GOD (GOL_HYD_SYS__FDI)
3.15.1.24
- HYDRAULIC SYSTEM FDI (GOD) IS ACTIVATED UPON ATO TRANSITION TO MM 305, IT IS ACTIVATED UPON CONFIRMED IN MM 305, IT IS ACTIVATED UPON OPS 302 PRO AND IS ACTIVE THROUGHOUT OPS 3. IT IS ACTIVATED UPON TRANSITION TO MM 601 AND RUNS CONCURRENTLY WITH THE RTLS SEP SEQ
- THE SELECTION FILTER A FAILURE HAS OCCURRED ON ANY ONE OF THE THREE HYDRAULIC SYSTEMS
- IF A FAILURE HAS OCCURRED, AN ATTEMPT IS MADE TO ISOLATE THE FAILURE
- THE SELECTION FILTER IS MISSED APPROPRIATELY, AND, IF A DILEMMA SITUATION EXISTS FOR ANY SYSTEM, THEN THE CREW IS ALERTED ACCORDINGLY
  - CALL COMMON FIXED POINT FDI: ROUTINE THREE TIMES

HYDRAULIC_SYSTEM_SOP GPA (GPA_HYD_SYS__SOP)
3.15.1.24
- THE HYDRAULIC SYSTEM SOP (GPA) IS CALLED BY THE GPT DURING MAJOR MODES 301-303 AND 601-603 THROUGHOUT MM 304, 602, 603, AND 603 AT 25 HZ PERFORMS REDUNDANCY MANAGEMENT (RM) SELECTION FILTERING ON THE 3 MAIN PUMP PRESSURE SENSORS ON EACH HYDRAULIC SYSTEM
- MONITORS THE STATUS OF EACH HYDRAULIC SYSTEM BASED ON THE HYDRAULIC PRESSURE INDICATIONS
- IF THE PRESSURE INDICATIONS (3 YES), THE SYSTEM IS SET TO HAVE HYDRAULIC PRESSURE (3 YES), THE SYSTEM IS (NO)
- MONITOR THE MAIN LANDING GEAR/DOOR AND NOSEWHEEL GEAR/DOOR UPLOCK DISCRETES TO DETERMINE THE GEAR STATUS (STORED UP DOWN AND LOCKED)

PITCH_POSITION_FEEDBACK_COMPENSATION_ AND_NOSE_WHEEL_POSITION_ SOP GPS (GPS__ELVN__PTS__COMP__SOP)
3.11.1.4
- THE NOSE WHEEL SOP (GPS) IS CALLED BY THE GEA AND SEP EVERY 10 YES, GPS (YES) IS CALLED BY THE GEA TRANSITION TO MM 602 AND THE TRANSITION TO MM 304 AND EVERY 10 YES
- GPS PERFORMS SELECTION FILTERING ON THE NOSE WHEEL POSITION FEEDBACK DATA INPUT FROM THE HARDWARE
- GPS ALSO PERFORMS THE FOLLOWING= IN 6.64 SEC/YES IN THE LANDING GEAR DURING EXTENSION
- IN THE LANDING GEAR HYDRAULIC LEAKAGE FOLLOWING LOCKDOWN
- IS LIKE SW/PIN

AERO_ACTUATOR_COMMAND_ SOP GPC (GPC_AERO_ACT_CMD__SOP)
3.10.2.1
- THE AERO ACTUATOR COMMAND SOP (GPC) PERFORMS THE FOLLOWING FUNCTIONS: ISSUES AERO SURFACE CONFIGURE COMMANDS IN PREPARATION TO THE CONFIGURED=NO ACTUATORS.
- GPC IS CALLED BY GPT DURING MAJOR MODES 301-303 TO PERFORM APPROPRIATE COMMANDS NEEDED TO THOROUGHLY CONDITION THE HYDRAULIC SYSTEM

HYDRAULIC_SYSTEM_LANDING_GEAR_CONTROL_ SEQUENCER GSS (GOL_HYD_SYS__LND__GR__CNT)
3.4.5.1
- MODULE IS ACTIVATED AT ORBITAL RELATIVE VELOCITY (MM 304 TRANSITION) AND IF GROUND RELATIVE VELOCITY DISPATCH THE MODULE CYCLICALLY AT 1 0884 HZ
- AFTER 6 MIN AND 33 SECH OPEN HYD SYS 2 LG ISO VALVE
- TERMINATE HYD SYS 2 LG ISO VALVE CMD AFTER A 5 SECOND INTERVAL
- IF GROUND RELATIVE VELOCITY (MSO SYS) ≤ 800 FPSH OPEN HYD SYS 1 LG ISO VALVE
- TERMINATE HYD SYS 1 LG ISO VALVE CMD AFTER A 5 SECOND INTERVAL
- IF VALVE 1 AND 2 COMMANDS HAVE BEEN TERMINATED, THEN THE GEAR DOWN SEQUENCE IS TERMINATED THE HYD SYS LG CONTROL SEQUENCE

AERO_SURFACE_ACTUATORS_ COMMAND_SOP GPC (GOL_AERO_ACT_CMD__SOP)
3.10.2.1
- THE AERO ACTUATOR COMMAND SOP (GPC) PERFORMS THE FOLLOWING FUNCTIONS: ISSUES AERO SURFACE CONFIGURE COMMANDS IN PREPARATION TO THE CONFIGURED=NO ACTUATORS.
- GPC IS CALLED BY GPT DURING MAJOR MODES 301-303 TO PERFORM APPROPRIATE COMMANDS NEEDED TO THOROUGHLY CONDITION THE HYDRAULIC SYSTEM

HYDRAULIC_SYSTEM_THERMAL_CONDITIONING GPT (GPT__HYD__THERMAL)
3.15.1.13
- GPT GENERATES SLOW POSITIONS TO THE ELEVONS, BODY FLAP, SPEEDBRAKE AND RUDDER
  - CALL GPC__AERO__ACT__CMD__SOP

LANDING__SOP GPT (GPT__LANDING__SOP)
3.10.8.1
- THE LANDING SOP (GPT) IS ACTIVATED UPON TRANSITION TO MM 603 AND PERFORMS LANDING IN MM 602 AND 603
- IF THIS IS ONE OF THE FIRST TWO PASSES THROUGH LANDING__SOP, IF ANY WEIGHT-ON-WHEELS DISCRETES ARE SET, AND NO WEIGHT-ON-WHEELS DISCRETES ARE SET, AND NO COMPATIBLES EXISTS, SET THE APPROPRIATE ERROR FLAGS
- IF EITHER THE ET SEP OR THE SRB SEP PANEL SWITCH IS ON, THEN SET THE WOW INITIATE FLAG ON
- IF THE MAIN GEAR WOW DISCRETES INDICATE BOTH RIGHT COMPAULT BITS ARE OFF, THEN PERFORM THE FOLLOWING
  - IF THE MAIN GEAR WOW DISCRETES DO NOT MATCH, THEN SET THE WOW DISAGREE FLAG AND INCREMENT THE GEAR DISAGREE COUNTER , AND IF THE COUNTER IS GREATER THEN 45 CYCLES, THEN SET THE WOW DISCREPA FLAG ON
  - IF THE MAIN GEAR WOW DISCRETES MATCH, THEN ZERO THE GEAR DISAGREE COUNTER
  - IF MAIN GEAR WOW DISCRETES INDICATE WEIGHT-ON-WHEELS, AND NO COMPAULTS EXIST FOR THE NOSE GEAR, AND NO WEIGHT-ON-WHEELS DISCRETES SHOW WEIGHT-ON-WHEELS GEAR, THEN SET THE WOW DISCREPA FLAG ON, ELSE, CLR. NO WEIGHT-ON-WHEELS GEAR, INCREMENT THE WOW COUNTER
- IF EITHER MAIN GEAR COMPAULTS ARE ON= DO NOT UPDATE THE WOW COUNTER, AND SET THE WOW DISCREPA FLAG
- IF THE FLATSPIN FLAG IS OFF, AND EITHER WOW INITIATE FLAG IS ON OR THE WOW COUNTER IS ≥ 4 CYCLES, THEN PERFORM THE PROPER INITIALIZATIONS AND SET THE FOLLOWING= FLATSPIN AND WOW/ON FLAGS, HYD SHADOW ENABLE WOW/ON FLAG, AND WOW/ON INDICATORS, AND THE NFE GTU FLAG
- IF THE FLATSPIN FLAG IS ON, THEN DO THE FOLLOWING= IF THE WOW INITIATE FLAG IS ON, THEN SET THE WOW WILL DELAY FLAG ON, OTHERWISE INCREMENT THE COUNTER
- SET THE WOW/ON FLAG TO SHOW AT LEAST ONE CYCLE HAS PASSED IN THE WOW/ON MODE
- IF THE WOW/ON FLAG IS ON, THE MAIN GEAR, AND THE LEFT AND RIGHT COMPAULTS ARE OFF, THEN=
  - IF THE NOSE GEAR WOW DISCRETES DISAGREE, THEN INCREMENT THE NOSE GEAR WOW DISAGREE ERROR COUNTER, AND IF THE DISAGREE COUNTER ≥ THE THRESHOLD SET THE NOSE GEAR ERROR FLAG ON
  - IF THE NOSE GEAR WOW DISCRETES AGREE, THEN ZERO THE DISAGREE COUNTER, AND IF THE WOW DISCRETES SHOW WEIGHT-ON-WHEELS, SET THE WOW FLAG ON, ELSE THEN THE WOW FLAG OFF
- IF THE ROLLOUT FLAG IS OFF, CHECK TO SEE IFA ROLLOUT HAS JUST BEEN PASSED STARTING AND SET ON = ESTABLISH WOW= INITIATE FLAG IS ON OR THE WOW FLAG IS ON
- IF THE PRECEDING CONDITIONS HAVE BEEN MET= SET THE ROLLOUT FLAG ON, SET THE ROLLOUT MM FLAG TO THE DTO MM, SET THE HUD ROLLOUT FLAG ON, ISSUE HYD SYS 3 LANDE GEAR ISO VALVE OPEN COMMAND, TRIGGER THE ROLLOUT PROCESSING, AND IF AUTO__BANK, THEN SET BATH=70 DEPN, ELSE SET THE HOTO=.080
- IF THE ROLLOUT FLAG IS ON, A CYCLE COUNTER IS INCREMENTED UNTIL 5 OR MORE SECONDS HAVE PASSED, AND THE HYD SYS 3 LAND ISO VALVE OPEN COMMAND IS TERMINATED

HYDRAULIC_SYSTEM_FDI GOD (GOL_HYD_SYS__FDI)
3.15.1.24
- HYDRAULIC SYSTEM FDI (GOD) IS ACTIVATED UPON ATO TRANSITION TO MM 305, IT IS ACTIVATED UPON CONFIRMED IN MM 305, IT IS ACTIVATED UPON OPS 302 PRO AND IS ACTIVE THROUGHOUT OPS 3. IT IS ACTIVATED UPON TRANSITION TO MM 601 AND RUNS CONCURRENTLY WITH THE RTLS SEP SEQ
- THE SELECTION FILTER A FAILURE HAS OCCURRED ON ANY ONE OF THE THREE HYDRAULIC SYSTEMS
- IF A FAILURE HAS OCCURRED, AN ATTEMPT IS MADE TO ISOLATE THE FAILURE
- THE SELECTION FILTER IS MISSED APPROPRIATELY, AND, IF A DILEMMA SITUATION EXISTS FOR ANY SYSTEM, THEN THE CREW IS ALERTED ACCORDINGLY
  - CALL COMMON FIXED POINT FDI: ROUTINE THREE TIMES

HYDRAULIC_SYSTEM_SOP GPA (GPA_HYD_SYS__SOP)
3.15.1.24
- THE HYDRAULIC SYSTEM SOP (GPA) IS CALLED BY THE GPT DURING MAJOR MODES 301-303 AND 601-603 THROUGHOUT MM 304, 602, 603, AND 603 AT 25 HZ PERFORMS REDUNDANCY MANAGEMENT (RM) SELECTION FILTERING ON THE 3 MAIN PUMP PRESSURE SENSORS ON EACH HYDRAULIC SYSTEM
- MONITORS THE STATUS OF EACH HYDRAULIC SYSTEM BASED ON THE HYDRAULIC PRESSURE INDICATIONS
- IF THE PRESSURE INDICATIONS (3 YES), THE SYSTEM IS SET TO HAVE HYDRAULIC PRESSURE (3 YES), THE SYSTEM IS (NO)
- MONITOR THE MAIN LANDING GEAR/DOOR AND NOSEWHEEL GEAR/DOOR UPLOCK DISCRETES TO DETERMINE THE GEAR STATUS (STORED UP DOWN AND LOCKED)

PITCH_POSITION_FEEDBACK_COMPENSATION_ AND_NOSE_WHEEL_POSITION_ SOP GPS (GPS__ELVN__PTS__COMP__SOP)
3.11.1.4
- THE NOSE WHEEL SOP (GPS) IS CALLED BY THE GEA AND SEP EVERY 10 YES, GPS (YES) IS CALLED BY THE GEA TRANSITION TO MM 602 AND THE TRANSITION TO MM 304 AND EVERY 10 YES
- GPS PERFORMS SELECTION FILTERING ON THE NOSE WHEEL POSITION FEEDBACK DATA INPUT FROM THE HARDWARE
- GPS ALSO PERFORMS THE FOLLOWING= IN 6.64 SEC/YES IN THE LANDING GEAR DURING EXTENSION
- IF OPC/MODE/FLAG IS TRUE (=NOT IN DIRECT MODE)
- COMPARES COMMANDED POSITIONS TO ACTUAL POSITIONS. IF THOSE POSITIONS DISAGREE MORE THAN A TOLERANCE FOR A GIVEN TIME
  - SEE IF THE ACTUAL MM RATE IS OPPOSITE THE COMMANDED MM RATE; OPPOSITE RATES FOR 3 CONSECUTIVE CYCLES CAUSE THE NW-POS-ERR FLAG TO BE SET TRUE
  - SEE IF THE ACTUAL MM RATE IS MORE THAN 0.2 DEG/CYCLE; A RATE LESS THAN .2 DEG/CYCLE IS OKAY? FOR 6 CONSECUTIVE CYCLES AT 25 HZ CAUSES THE NW-POS-ERR FLAG TO BE SET TRUE

EXTERNAL TANK SEPARATION OPERATIONS

VENT DOOR OPERATIONS

ET SEPARATION
MAN
SEP
1560
1559
AUTO
PNL C2
C3

SRB SEPARATION
MAN AUTO
SEP
1551
1552
AUTO
PNL C2
C3

FF 3 ALG NO WOW 1
FF 3 ALG NO WOW 2
FF 3 ALG NO WOW

BOX 2
LG PROXIMITY SENSOR BOX 1

AERO SURFACE ACTUATORS

HYDRAULIC POWER SYSTEM

GEAR/DOOR UPLOCK DISCRETES

NOSE WHEEL STEERING
DISCRETES
OFF

STEERING CONTROL BOX

NWS ACTUATOR ASSEMBLY

SEE DRAWING 15.2-1
SEE DRAWING 15.1-1
SEE DRAWING 9.16-1
SEE DRAWING 13.3-1

11. FOR FURTHER INFORMATION ON A SPECIFIC MODULE, NOTE THE REFERENCE NUMBER IN THE MODULE HEADER, AND GO TO THE OPS DOG, VOLUME III, PART 1 - GUIDANCE, NAVIGATION, AND CONTROL

THE ET SEPARATION SW MUST BE IN MAN AND SEP PBI DEPRESSED TO PROVIDE INPUT TO THE LANDING SOP

THE SRB SEPARATION SW MUST BE IN MAN/AUTO AND SEP PBI DEPRESSED TO PROVIDE INPUT TO THE LANDING SOP

SPB 15 ALSO DISPATCHED AT A 25 HZ IN OPS 1 (GEA) FROM MCO CONFIRMED THROUGH MM 104 AND IN OPS 3 (GOP) DURING MM201,301, AND MM303

ACTIVATED ON TRANSITION TO MM 603 BY GEA

1.04 HZ RATE

.1984 HZ RATE

25 HZ RATE

6.25 HZ RATE

PROGRAMS ARE SCHEDULED AT A PRESCRIBED PHASE, FREQUENCY, AND PRIORITY, AND ARE PLACED IN A QUEUE BY THE SYSTEM EXECUTIVE PROGRAM. PROGRAMS ARE RUN ON A FIRST COME FIRST SERVED BASIS AND ARE INTERRUPTED ONLY BY PROGRAMS OF A HIGHER PRIORITY

NOTES: PROCEDURES ARE ONLY INVOKED AS CALLS BY THE CALLING ROUTINE AND CONTROL RETURNS BACK TO THE CALLER WHEN THROUGH. PROCEDURES CANNOT BE USED AS EXPRESSIONS

8 MECH/SW OV 1

SIGNATURE	DATE	
DSSN VICKI S. HUNTER	5/29/90	NATIONAL AERONAUTICS AND SPACE ADMINISTRATION LYNDON B. JOHNSON SPACE CENTER HOUSTON, TEXAS
SM VICKI S. HUNTER	5/29/90	MECHANICAL/SOFTWARE OVERVIEW (PASS ONLY) 018D AND 018F
CHIEF L. DAVID PLEDGER	5/29/90	
CHIEF C. Dan Peters	5/29/90	
MP Charles Ray	5/29/90	SPACE SHUTTLE DVD NO 15.8
DIRECTOR S.C. Gordon	5/29/90	ALL
CM 4 IPOH		DO.5 V.34 PAGE 1 OF 1

BASIC REV E

PASS/SM

MECHANICAL SOFTWARE

DATE:	NAME:	VERSION:
DATE: 9/13/90	NAME: JMB	VERSION: ONLY
DATE: 09/26/90	NAME: RLH	VERSION: ONLY
DATE: 09/28/90	NAME: YSH	VERSION: ONLY

CONSTANT TABLES TABLE (CTT) — CTT — A.5.11.1

● CONTAINS THE TABLE PA-INTENANCE UPDATEABLE CONSTANT VALUES USED BY THE SPECIAL PROCESSES. THEY ARE DIVIDED INTO SUBSECTIONS BY DISCIPLINE.
TABLE SECTIONS:
DESCRIPTION — PARM, I.D. #
→ APU 1 TEMPERATURE CONSTANT — V60T01A00
→ APU 2 TEMPERATURE CONSTANT — V60T02A00
→ APU 3 TEMPERATURE CONSTANT — V60T03A00
→ HYDRAULIC SYSTEM 1 BIAS QUANTITY — V60B01S00
→ HYDRAULIC SYSTEM 2 BIAS QUANTITY — V60B02S00
→ HYDRAULIC SYSTEM 3 BIAS QUANTITY — V60B03S00
→ APU 1 NITROGEN MASS LOADED CONST — V60S01R0C
→ APU 2 NITROGEN MASS LOADED CONST — V60S02R0C
→ APU 3 NITROGEN MASS LOADED CONST — V60S03R0C

CONSTANT ID'S TABLE (TM CDT) — CDT — A.5.13.1
COMPOOL ICSL, TAL_CDT

● CONTAINS PARAMETER ID'S NEEDED BY TABLE PA-INTENANCE TO UPDATE THE VALUES IN THE CDT.
SCALAR SECTION:
→ HYDRAULIC TEMPERATURE CONSTANT ID'S
→ HYDRAULIC SYSTEM BIAS QUANTITY
→ HYDRAULIC SYSTEM TEMP LOW LIMITS ID'S
→ HYDRAULIC SYSTEM PRESSURE LOW LIMITS ID'S
→ HYDRAULIC SYSTEM PRESSURE LOW LIMITS ID'S
→ APU NITROGEN MASS LOADED CONST
→ HYDRAULIC CIRC PUMP RUN TIME LIMIT TIMER
→ HYDRAULIC CIRC PUMP RUN RUN TIME
DISCRETE SECTION:
→ APU TEMP BIT FLAG ID'S
→ APU PRESSURE BIT FLAG ID'S
→ APU TEMP BIT FLAG ID'S

	VARIABLE NAME	PRESET VALUE	UNITS
→ HYD 1 B/T RTN T FUS	V06T01A4A	37	DEG F
→ HYD 1 HOA ELEVON T	V06T01A4B	37	DEG F
→ HYD 1 RSA ELEVON T	V06T01A4C	37	DEG F
→ HYD 1 RSA RTN T FUS	V06T01A4D	37	DEG F
→ HYD 2 B/T RTN T FUS	V06T02A4A	-157	DEG F
→ HYD 2 LOA BK RTN T FUS	V06T02A4B	-157	DEG F
→ HYD 2 RHO BK RTN T FUS	V06T02A4C	-157	DEG F
→ HYD 2 B/T RTN T FUS	V06T02A4D	-157	DEG F
→ HYD 3 B/T B/T T FUS	V06T03A4A	37	DEG F
→ HYD 3 RSB ELEVON T	V06T03A4B	37	DEG F
→ HYD 3 LOB ELEVON T	V06T03A4C	37	DEG F
→ HYD 3 RSB RTN T FUS	V06T03A4D	37	DEG F
→ HYD 3 RHO BK RTN T FUS	V06T03A4E	-157	DEG F
→ HYD 1 RHO BK RTN T FUS	V06T01A4E	-157	DEG F

	VARIABLE NAME	VALUE	UNITS
→ HYDRAULIC SYSTEM 1 PRESSURE LOW LIMITS	V60P01A4A	1960	PSIA
→ HYDRAULIC SYSTEM 2 PRESSURE LOW LIMITS	V60P02A4A	1960	PSIA
→ HYDRAULIC SYSTEM 3 PRESSURE LOW LIMITS	V60P03A4A	1960	PSIA
→ HYDRAULIC 1-3 CIRC PUMP RUN TIME LIMIT	V60A01A4C	10	MINUTES
→ HYDRAULIC 1-3 CIRC PUMP RUN RUN TIME	V60A01A4D	10	MINUTES
→ HYDRAULIC 1-3 CIRC PUMP RUN RUN TIME	V60A01A4E	10	MINUTES
DISCRETE SECTION:			
→ APU 1 PRESSURE FLAG	V60S01S00		
→ APU 2 PRESSURE FLAG	V60S02S00		
→ APU 3 PRESSURE FLAG	V60S03S00		
→ APU PRESSURE BIT FLAG	V60S01S02		
→ APU PRESSURE BIT FLAG	V60S02S02		
→ APU PRESSURE BIT FLAG	V60S03S02		
→ APU TEMP BIT FLAG	V60S01S03		
→ APU TEMP BIT FLAG	V60S02S03		
→ APU TEMP BIT FLAG	V60S03S03		

SM BASIC INITIALIZATION PROCESS — 3.5.1.10
I-DAL_SM

● SET INITIALIZE PARAMETERS FOR BASIC SM PROCESSES
● CALL INITIALIZE PROCESSES
● SET HYDRAULIC INITIALIZATION FLAG TO ON FOR ON-ORBIT TEMPERATURE CONTROL

HYBRID DISPATCHER INITIALIZATION/CLEANUP TABLE — 3.5.23
I-DAL_HYBRID

● THIS TABLE IS USED BY THE SM HYBRID DISPATCHER INITIALIZATION/CLEANUP MODULE TO INITIALIZE THE HYBRID DISPATCHER TABLE

SM HYBRID DISPATCHER TABLE — 3.5.22
COMPOOL ICSL_SM_DISPATCH

● PROVIDES INFORMATION TO THE SDP_EXEC_TO CYCLICALLY EXECUTE THE VARIOUS SPECIAL PROCESSES AND CYCLIC MISSION SPECIALIST PROCESSES. DATA CONSISTS OF A DISPATCHER TABLE, A TABLE LENGTH, AND A TABLE ORGANIZATION AND CONTENT IS MISSION DEPENDENT

SPS 2 INITIALIZATION/CLEANUP — 3.5.1.7
I-DAL_CLNUP1

● PROVIDES FOR CONTROLLED ENTRY AND EXIT PROCESSING FOR THE SM SPS 2 CONTROL SEGMENT
→ CALL SEQ_SM PERFORMS THE INITIALIZATION OF PARAMETERS FOR SM BASIC AND SM SPECIAL PROCESSES
→ CALL SEQ_HYB_DISPATCH UPDATES THE HYBRID DISPATCHER TABLE FOR SPS 2
● MODE DESIGNATION PROCESS SETTING OF FLAGS FOR PRO PROCESSOR AND THE HYBRID DISPATCHER TABLE TO ACTIVATE THE PRO PROCESSOR
● SPS 2 CLEANUP PROCESS INCLUDES RESETTING FLAGS FOR PRO AND THE HYBRID DISPATCHER TABLE TO DEACTIVATE PRO.
● IF THE PRO SWITCH IS NOT IN "STOP" OR IF THE PRO POWER IS TOP INDICATIONS ARE SET FOR THE PRO PROCESSOR AND THE PRO PROCESSOR IS CALLED TO CLEAN-UP

SPS 3 INITIALIZATION/CLEANUP — 3.5.1.1
I-DAL_CLNUP2

● PROVIDES FOR CONTROLLED ENTRY AND EXIT PROCESSING FOR THE SM SPS 3 CONTROL SEGMENT
→ CALL SEQ_SM PERFORMS THE INITIALIZATION OF PARAMETERS FOR SM BASIC AND SM SPECIAL PROCESSES
→ CALL SEQ_HYB_DISPATCH UPDATES THE HYBRID DISPATCHER TABLE FOR SPS 3

USER INTERFACE (UI) — 3.5.1.1
I-DAL_UI

● BASIC INPUT COMMANDS FROM THE KEYBOARD(S), ORBITER, AND OTHER COMPUTERS
● PERFORMS INITIATING, SEQUENCING, AND TERMINATION OF APPLICATION AND SYSTEM SERVICES

KBD/DEU

SPS/3 PROCESSING EXECUTIVE — 3.5.1.1
I-DAL_SPS1

● SPS_EXEC_1 IS DISPATCHED BY THE HYBRID DISPATCHER, AND HAS'S BLOCK OF DMOC MAJOR FACILITATES EXECUTING SPECIAL PURPOSE PROCESSES THROUGH USING THE HYBRID DISPATCHER TABLE.
● WHEN THE HYBRID DISPATCHER DETERMINES THAT A PROCESS IS TO BE EXECUTED, IT CALLS SPS_EXEC_1 WHICH:
→ CALL SEQ_APU_FUEL_QTY
→ CALL SEQ_HYD_FUEL_QTY
→ CALL SEQ_APU_TCA_TEMP
→ CALL SEQ_HYD_TCA_TEMP
→ CALL SEQ_SM_DATA_OUT

MMU/I/OOOMS (SPS3) CONTROL SEGMENT — 3.5.1.1
I-DAL_SPS1

● ACTIVATES SPS 3 SYSTEMS MANAGEMENT PROCESSING AND PRESENTS THE PRO SYSTEMS PAGE #201

MMU/I/OOOMS (SPS2) CONTROL SEGMENT — 3.5.1.1
I-DAL_SPS1

● ACTIVATES SPS 2 SYSTEMS MANAGEMENT PROCESSING AND PRESENTS THE PRO SYSTEMS PAGE #201

APU FUEL QUANTITY — 3.5.1.10
I-DAL_APU_FUEL_QTY

● THIS MODULE EXECUTES CYCLICALLY TO DETERMINE THE QUANTITY OF FUEL REMAINING IN THE 3 APU FUEL TANKS
● IF OPERATIONAL SEQUENCE IS ENTRY OR ABORT
→ IF DOMAIN/ATTR = 0 THEN SET APU FUEL TANK QTY = 0
→ IF DOMAIN/ATTR NOT EQUAL 0 THEN COMPUTE APU FUEL TANK QTY
● IF APU FUEL TANK QTY = 0 THEN SET APU FUEL TANK QTY = 0
● IF APU FUEL TANK QTY > 100 THEN SET APU FUEL TANK QTY = 100
● CHECK INPUT PARAMETERS STATUS
→ IF ANY INPUT PARAMETER STATUS IS INVALID, THEN SET OUTPUT PARAMETER STATUS TO INVALID

HYDRAULIC WATER BOILER QUANTITY — 3.5.1.10
I-DAL_HYD_FUEL_QTY

● THIS MODULE COMPUTES THE AMOUNT OF WATER REMAINING IN THE THREE STORAGE TANKS (SYSTEMS 1, 2, AND 3)
● IF OPERATIONAL SEQUENCE IS ENTRY OR ABORT
→ THEN COMPUTE HYD QTY REMAINING
● IF HYD BLR IND OUTLET PRESSURE = 0 THEN
→ IF HYD HDR QTY = 0 THEN SET HYD HDR QTY = 0
→ IF HYD HDR QTY > 100 THEN SET HYD HDR QTY = 100
● CHECK INPUT PARAMETERS STATUS FOR ADDITIONAL HDR SOFTWARE LOGIC AND COMPUTATION

DISPLAY/SIGNAL/ET TABLE — 3.5.1.10
I-DAL_DISPLAY

● THE DISPLAY/SIGNAL/ET TABLE CONTAINS PARAMETERS THAT ARE FOR DISPLAY ONLY OR PARAMETERS THAT ARE TO BE SIGNALLISTED
→ APU FUEL QUANTITY VARIABLES
→ HYDRAULIC BOILER QUANTITY VARIABLES

HYDRAULIC CIRC PUMP AUTO CONTROL GUIDANCE — 3.5.1.10
I-DAL_HYD_CIRC_PUMP

● THIS MODULE TURNS THE THREE HYDRAULIC FLUID PUMPS ON AND OFF, BASED ON THE MONITORING OF THE ACCUMULATOR PRESSURE AND THE FLUID TEMPERATURE SENSORS IN EACH OF THE THREE HYDRAULIC SYSTEMS
● REFER TO THE CONSTANT VALUE TABLE (CTT) FOR SPECIFIC VALUES USED IN THIS MODULE
● ACCUMULATOR PRESSURE MAINTENANCE HAS PRIORITY OVER THE HYD FLD TEMP CONTROL GUIDANCE
● IF ACCUMULATOR PRESSURE FLAG
● PERFORM HYD STD ACCUMULATOR PRESSURE CHECK
→ IF ACCUMULATOR PRESSURE (LOAD AND) 30 PSIA
1. SET ACCUMULATOR PRESSURE FLAG TO ON (ADD 1 ON NUMBER OF CIRC PUMPS RUNNING FOR LOW ACCUMULATOR PRESSURE)
2. SET ACCUMULATOR PRESSURE FLAG TO ON
3. PRIORITIZE IN NUMERICAL ORDER
4. START ACCUMULATOR PRESSURE TIMER
5. IF ACCUMULATOR PRESSURE TIMER = 5 MIN AND THE ACCUMULATOR TIMER HAS ELAPSED, TURN THE CIRC PUMP OFF
● IF ACCUMULATOR PRESSURE FLAG
● IF CIRC PUMP NOT ON APU CONTROL THEN TURN IT OFF
● IF ANY ACCUMULATOR PRESSURE FLAGS HAVE BEEN SET THEN TURN ON THE APPROPRIATE HYDRAULIC CIRC PUMP
● IF NO ACCUMULATOR PRESSURE FLAGS ARE SET, THE HYDRAULIC FLUID TEMPERATURE CONTROL MONITORING
● PERFORM
→ MONITOR THE TEMPERATURE SENSORS FOR AN OUT-OF-LIMITS LOW CONDITION
→ CHECK FOR CIRC PUMP REDUNDANCY ASSIGNMENTS BASED ON THE TEMP SENSORS
→ CHECK HYD STD H/TU PR:08771 (FOR PUMP STATUS
→ IF THE TEMP IS LESS THAN THE LOW LIMIT, OR IS BELOW LIMITS, OR WITHIN ALLOWABLE CONFIGURED PUMP RUN TIME IS EXCEEDED AND THE PUMP IS ON, THEN TURN ON/OFF PERFORM CIRC PUMP ON/OFF FUNCTION
→ IF THE PUMP FOR THAT SYSTEM HAS NOT BEEN TURNED ON, THEN PERFORM TURN ON PUMP TEMP SM PROCESS
● SEE SSSH DRAWING NO. 15.5-3 FOR ADDITIONAL CIRC PUMP SOFTWARE LOGIC

SPECIAL PROCESSES DATA OUT BUFFER — 3.5.1.10
I-DAL_SP_DATA_OUT

● THIS MODULE WRITES ALL SPECIAL PROCESSES OUTPUTS TO THE PAYLOAD MDM'S AND PERFORMS ALL SP ANNUNCIATION
● THE SPECIAL PROCESSES DATA OUT BUFFER CONTAINS THE MASKS AND SET UP FOR FIXED FLIGHT COMPUTER OPERATING SYSTEM. DISPLAY PROCESSING AND AN FIXD MACRO I/O ISSUED BY THE SPECIAL PROCESSES FOR OUTPUT PARAMETERS IN THE SP OUTPUT BUFFER TABLE.
● EITHER/OR, RESET MASKS AND SET UP FOR FIXD OUTPUT
● SPECIAL PROCESSES DATA OUT BUFFER TABLE CONTAINS THE NON-PRO SP OUTPUT PARAMETERS, 16 TBL OF OUTPUT BUFFER
● MDMS DISCRETE PARMDTS COMMON TO PRO AND THE OTHER
● PERFORM SP ANNUNCIATION PROCESSING
● PERFORM SP ANNUNCIATION OUTPUT PROCESSING
● ANNUNCIATION IS ENABLED FOR THREE INDICATORS THAT ARE ASSIGNED TO THE SP PROCESSES
● ONCE ANNUNCIATION IS ENABLED FOR A PARTICULAR INDICATION, IT IS NOW RE-ENABLED UNTIL THAT INDICATION HAS BEEN SET UP AS PROCESSED BY SSH_SM_DATA_OUT AND THEN SET AS ACK'D

PAYLOAD BAY DOORS — 3.5.1.10 TO 3.5.1.19
I-DAL_PL_B_DR_CONT

● THE PAYLOAD BAY DOORS MODULE EXECUTES CYCLICALLY TO OPEN AND CLOSE THE PAYLOAD BAY DOORS AND THE 16 ASSOCIATED LATCHES
● PERFORM DOOR SEQUENCING
● CONTROL RADIATOR DEPLOYMENT
● PERFORM DRT FEEDBACK DISPLAY
● PERFORM RIGHT DOOR LATCH AND DOOR FEEDBACK DISPLAY
● PERFORM RIGHT BOR LATCH AND DOOR FEEDBACK DISPLAY
● PERFORM LEFT BRD LATCH AND DOOR FEEDBACK DISPLAY
● PERFORM LEFT DOOR
● PERFORM PBD TALKBACK OPERATIONS
● MODE SELECTION: AUTO
→ ENABLE AUTO/ENTRY/CSS COMMANDS
→ DISABLE UNTENTRY/CSS OPEN COMMANDS
→ DISABLE UNTENTRY/CSS CLOSE COMMANDS
→ AUTO OPEN/CLOSE SEQUENCE
→ PERFORM OPEN FEEDBACK
→ PERFORM CLOSE FEEDBACK
→ PERFORM DOOR FEEDBACK
→ PERFORM PBD CONTROL
→ PERFORM PBD COMPLIANCE CHECK (FEEDBACK)
→ ENABLE COMMANDS
→ SET CLOSE FAIL INDICATORS
→ SET DOOR FAIL INDICATORS
● MODE SELECTION: MANUAL
● PERFORM PBD TALKBACK OPERATIONS
→ DISABLE COMMANDS
● MANUAL SEQUENCE
→ PERFORM MANUAL OPEN
→ PERFORM MANUAL CLOSE

PAYLOAD BAY DOORS COMMUNICATIONS TABLE — 3.5.1.19
COMPOOL ICSL_PBD_CMD

● THE PAYLOAD BAY DOORS COMMUNICATIONS TABLE CONTAINS THE DATA PASSED BETWEEN THE PAYLOAD BAY DOOR PROCESSOR AND THE PAYLOAD BAY DOOR ITEM PROCESSOR
→ AUTO MODE ITEMS
→ MANUAL MODE ITEMS
→ POWER ON/OFF ITEM
→ PBD STOP/ CLOSE ITEM
→ PBD OPEN ITEM
→ PBD STOP ITEM
→ PBD CLOSE ITEM
→ PBD OPEN FAIL INDICATORS
→ PBD CLOSE FAIL INDICATORS
→ PBD DOOR FAIL INDICATOR
→ PBD SWITCH INDICATOR TEST
→ PBD SWITCH OUTPUT STATUS
→ LATCH AND DOOR OUTPUT STATUS
→ LATCH AND DOOR OUTPUT STATUS
→ PBD OUTPUT INDICATOR
→ PBD ITEM FLAG
→ MANUAL MODE FLAG
→ POWER ON/OFF FLAG
→ PBD DISPLAY UPDATE INDICATOR

PAYLOAD BAY DOORS ITEM PROCESSOR — 3.5.1.19
I-DAL_ITEM

● TAKES ITEM ENTRIES MADE ON THE PBD DISPLAY, DOES THE APPROPRIATE ITEM CHECKING, AND SETS UP THE APPROPRIATE ITEM OF THE LATCH USE BY THE CYCLIC PBD MODULE OR ENABLES AN ERROR MESSAGE FOR OUTPUT
● IF THE ITEM ENTRIES ARE FOR POWER ON/OFF OR POWER ON/OFF FLAG IS SET TO ALERT SSH_PL_B_DOORS THAT POWER ON/OFF COMMANDS NEED TO BE SET ON OR OFF
● IF THE ITEM ENTRIES ARE FOR PBD STOP/CLOSE OR PBD CONTROL SWITCH OR THE PBD STOP ITEM 15 OR THE "STOP" POSITION
● IF THE ITEM ENTRIES ITEM ENTRIES ARE VALID IF EITHER THE PBD CONTROL SWITCH OR THE PBD STOP ITEM 15 IS THE "STOP" POSITION OR ANY MANUAL MODE ITEMS ARE SET
● ALL BYPASS SWITCH ITEM ENTRIES ARE VALID, WHEN THE SWITCH BYPASS ITEM 15 ON
● IF THE ITEM ENTRIES ARE VALID, A BIT IS SET IN THE FAULT MESSAGE PARAMETER TABLE, THUS ALERTS THE CYCLIC USER INTERFACE PROGRAM THAT ANNUNCIATION IS TO BE PERFORMED

PL BAY DOOR — PL BAY MECH PWR
DOOR 1 — DOOR 2 — DOOR 3 — DOOR 4
ENABLE — ENABLE — ENABLE — ENABLE
PL BAY DOOR — STBD — PORT — RADIATOR — STBD — PORT
OPEN — LATCH CONTROL — RADIATOR CONTROL
CLOSE — LATCH CONTROL — RADIATOR CONTROL
K2 ANTENNA — MANNED MANEUV UNIT
DIRECT STOW — DEPLOY — Stbd SPL1 ORB, Rdr Antenna — Port SPL2 ORB, Rdr Antenna
APT — CLOSE A — CLOSE B

KBD/DEU — PL Bay DOORS — XX X 000/00A/00B/00 — 000/00A/00B/00
AC POWER — ON / OFF
AUTO MODE — ON / OFF
STATUS LATCHES (MAN / SPI/O) — ACQ — CLOSE LATCH / OPEN LATCH / DOOR OPEN / DOOR CLOSED
STBD — LATCHES — DOORS
PORT — LATCHES — DOORS
PBD SW BYPASS 145 — SPDR 150 / CLOSE 175 — (XX)

CALLED ONCE EVERY 400 MILLISECONDS
SEE DRAWING 15.5-3 FOR HYDRAULIC CIRC PUMP OPERATIONS
THE PAYLOAD MDM1 CHANNEL15 THE DATA FROM THE SPDR RECONNECTED AS DATA, DATA CHANNEL15SD THROUGH THE PAYLOAD MDM COMPOOLICS A PORTION OF THE SP DOWNLIST, THE SP DOWNLIST IS THE OPERATIONAL DOWNLINK, AND SP DOWNLIST IS THE SUPPLEMENT OF THE SP DATA, AND DOWNLIST, AND SM DOWNLIST IS THE OPERATIONAL DOWNLINK
SEE DRAWING 15.5-2 FOR PL BAY OPERATIONS
1. FOR FURTHER INFORMATION ON A SPECIFIC PROCESS REFER TO THE REFERENCE NUMBERS IN THE MIDDLE SCHOOL, AND IN THE SPS MDL VOLUME FILL PART 2 - SYSTEMS MANAGEMENT
CALLED WHEN AN ITEM ENTRY IS MADE TO THE PRO DISPLAY
CALLED BY THE PAYLOAD BAY DOORS PROCESS WHENEVER IT WAS COMMANDED TO INPUT
SCHEDULED 6.25 TIMES PER SECOND
CALLED EVERY 2 SECONDS
PROGRAMS ARE SCHEDULED AT A PRESCRIBED PHASE, FREQUENCY, AND PRIORITY. EXECUTION PLACED ON A QUEUE BY THE SYSTEM SCHEDULER. EXECUTED BY THE SYSTEM DISPATCHER. ROUTINE AND ARE INTERRUPTED ONLY BY PROCESSES OF HIGHER PRIORITY.
NOTES: PROCESSORS ARE ONLY INVOKED AS CALLS BY THE CALLING ROUTINE AND CONTROL RETURNS BACK TO THE CALLED WHEN TERMINAL PROCEDURES CANNOT BE USED AS EXPRESSIONS

8 MECH/SW OV 2

SIGNATURE	DATE	NOTICE: INFORMATION AND DATA IDENTIFICATION
DRAW: KIRK S. HUNTER	4/8/90	LOCKHEED MISSILES & SPACE COMPANY, INC.
DR VICKI S. HUNTER	4/8/90	
CHECK: DATA PREPARATION		MECHANICAL/SOFTWARE OVERVIEW (PASS ONLY) OIBD AND OIBF
CHECK:		
APP:		SPACE SHUTTLE
ENG PGM & DISCIP:	4/7/90	DWG NO: 15.8
QA:	DATE:	SIZE: D
CM:	DATE:	SCALE: NONE
		SHEET: 1 OF 1

BASIC REV E

BASIC REV E

FOR DETAILED COMPONENT AND LOGIC INFORMATION REFER TO:

SSSH DWG NO.	SSSH DWG TITLE	VENDOR NAME	VENDOR DWG NO.	VENDOR SHEET NO.	REV	DATE	VENDOR DRAWING TITLE
15.1-1	ACTIVE VENT SYSTEM VENTS 1 AND 2	NASA	08934	3.4.1	D	10/84	SHUTTLE OPERATIONS DATA BOOK
		NASA	DRL031 -0208			11/85	MASTER REQUIREMENTS LIST
		ROCKWELL	VS70-590509	1,2	C	1/29/85	SCHEMATIC DIAGRAM - ACTIVE VENT DOOR SUBSYSTEM
		ROCKWELL	VS70-590502	1,2	E	3/5/85	SCHEMATIC DIAGRAM - ACTIVE VENT DOOR SUBSYSTEM
15.1-2	ACTIVE VENT SYSTEM VENTS 1 AND 2	ROCKWELL	VS70-590509	2,3,4,5	C	1/29/85	SCHEMATIC DIAGRAM - ACTIVE VENT DOOR SUBSYSTEM
		ROCKWELL	VS70-590502	2,3,4,5	E	3/5/85	SCHEMATIC DIAGRAM - ACTIVE VENT DOOR SUBSYSTEM
		ROCKWELL	VO70-594571	1,2,3	B	12/5/85	MECHANICAL INSTALLATION - VENT DOOR MECHANISM, P/L BAY (3, 5, & 6)
		ROCKWELL	V070-594501	1,2,3	B	3/13/84	MECHANICAL INSTALLATION - VENT DOOR MECHANISM, P/L BAY AND WING (4 & 7)
15.1-3	ACTIVE VENT SYSTEM VENTS 6, 8, & 9	ROCKWELL	V070-595501	1	C	4/26/84	MECHANICAL INSTL - VENT DOOR MECHANISM, AFT FUSELAGE AND OMS.
		ROCKWELL	VS70-590509	6,7,8,9,10,11	C	1/29/85	SCHEMATIC DIAGRAM - ACTIVE VENT DOOR SUBSYSTEM
		ROCKWELL	VS70-590502	6,7,8,9,10,11	E	3/5/85	SCHEMATIC DIAGRAM - ACTIVE VENT DOOR SUBSYSTEM
		ROCKWELL	V070-594571	1,2,3	B	12/5/85	MECHANICAL INSTALLATION - VENT DOOR MECHANISM, P/L BAY (3, 5, & 6)
15.1-4	VENT DOOR SOFTWARE	NASA	08934	3.4.1	D	10/84	SHUTTLE OPERATIONS DATA BOOK
		ROCKWELL	STS83-0026B	4.4.1	B	9/9/87	FUNCTIONAL SUBSYSTEM SOFTWARE REQUIREMENTS VENT DOORS (4.161)
15.2-1	ORBITER/ET UMBILICAL CLOSEOUT DOOR	RI	V070-565062		C	6/2/88	LATCH ASSY - CENTERLINE, ET SEPARATION SYSTEM CLOSEOUT DOOR
		RI	V070-565103		A	12/6/78	LATCH ASSY- OUTBOARD FWD, CLOSED, ET UMBILICAL DOOR
		RI	V070-565000		F	10/20/89	INSTALLATION - ET UMBILICAL DOOR MECHANISM
		RI	V070-565001		B	6/17/81	MECHANISM ASSY - FWD ET ORBITER UMBILICAL DOOR
		RI	V070-565002		B	1/20/81	MECHANISM ASSY - AFT ET / ORBITER UMBILICAL DOOR
		NASA	08934	4.2.3.2.2	E	1/88	SHUTTLE OPERATIONS DATA BOOK
		NASA	WC-R-5439			1/7/80	SHUTTLE OPERATIONS DATA BOOK DATA REQUEST
15.2-2	ORBITER / ET UMBILICAL CLOSEOUT DOORS (ELECT)	RI	V570-560112		C	11/12/86	SCHEMATIC DIAGRAM - EXTERNAL TANK DOORS CONTROL SUB-SYSTEM
		NASA	DRL031-0208			11/85	MASTER REQUIREMENTS LIST
		NASA	08934	4.2.3.2.2	E	1/88	SHUTTLE OPERATIONS DATA BOOK

DWG	SIGNATURE	DATE	DWG	SIGNATURE	DATE
15.1, 1-4	ENGR A. L. SIMON			ENGR	
	ENGR [signature]	11/6/90		ENGR	
15.2-1, 2	ENGR N. KNIGHT			ENGR	
	ENGR [signature]	10/24/90		ENGR	
	ENGR			APP [signature]	2 Nov 90
	ENGR			APP [signature]	11/5/90
	ENGR			OMNIPLAN	
	ENGR			LTR E	PCN

NATIONAL AERONAUTICS AND SPACE ADMINISTRATION
LYNDON B. JOHNSON SPACE CENTER HOUSTON, TEXAS

VENDOR DRAWING REFERENCES

SPACE SHUTTLE | TBL NO 15-I
ALL

PAGE 15.I-1 | SHEET 1 OF 5

BASIC REV E

FOR DETAILED COMPONENT AND LOGIC INFORMATION REFER TO:

SSSH DWG NO.	SSSH DWG TITLE	VENDOR NAME	VENDOR DWG NO.	VENDOR SHEET NO.	REV	DATE	VENDOR DRAWING TITLE
15.2-3	ET DOOR SOFTWARE PASS AND BFS	NASA	81-0026	4.2.3		5/86	FLIGHT SYSTEMS SOFTWARE REQUIREMENTS
		IBM	NAS 9-16920	3.8.3.5	OI8A	6/87	DETAILED DESIGN SPECIFICATIONS
		NASA	MG0-38120	102 - 103	A		BACKUP FLIGHT SYSTEMS PROGRAM REQUIREMENTS DOCUMENT
15.3-1	ORBITER ET SEPARATION - MECHANICAL	RI	V070-562001		C	5/20/85	EXTERNAL TANK / ORBITER FORWARD ATTACH INSTALLATION
		RI	V070-565250		A	1/12/88	LINEAR INSTL - ORBITER / ET AFT ATTACH SEPARATION SYSTEM
15.3-2	ORBITER / ET SEPARATION - MECHANICAL	RI	V070-565301		E	11/20/89	SUPPORT BRACKET - ORBITER LH_2 / ELEC, UMBILICAL, ET / ORBITER SEPARATION SYSTEM, ASSY OF
		RI	V070-565330		C	2/8/78	BRACKET ASSY - ORBITER LO_2 / ELEC, UMBILICAL, ET / ORBITER SEPARATION SYSTEM
		RI	V070-565335		D	3/13/90	BRACKET ASSY - ORBITER LH_2 / ELEC, UMBILICAL, ET / ORBITER SEPARATION SYSTEM
		RI	V070-565371		B	12/4/84	CURTAIN - CLOSEOUT ET UMBILICAL PLATE, LH_2 ASSY
		RI	V070-565410		B	12/20/84	CURTAIN - CLOSEOUT ET UMBILICAL PLATE, LH_2 & LO_2 INSTALLATION
15.3-3	ORBITER ET SEPARATION MECHANICAL	RI	V070-565301		E	11/20/89	SUPPORT BRACKET - ORBITER LH_2 / ELEC UMBILICAL, ET / ORBITER SEPARATION SYSTEM, ASSY OF
		RI	V070-565330		C	2/8/78	BRACKET ASSY - ORBITER LO_2 ELEC, UMBILICAL, ET / ORBITER SEPARATION SYSTEM
		RI	V070-565335		D	3/13/90	BRACKET, ET ASSY - ORBITER LH_2 ELEC, UMBILICAL, ET / ORBITER SEPARATION SYSTEM
15.5-1	HATCHES (SIDE)	ROCKWELL	V070-332502	ALL		4/75	HATCH ASSY FUS-LH EGRESS
			PHOTO S87-25238 25239				
			S79-31418 31416 S85- 29853				
			V070-338601	ALL		8/90	HATCH INSTL - FUSELAGE LH EGRESS

DWG	SIGNATURE	DATE	DWG	SIGNATURE	DATE
15.2-3	ENGR N. KNIGHT			ENGR	
	ENGR [signature]	10/22/90		ENGR	
15.3-1,2,3	ENGR N. KNIGHT			ENGR	
	ENGR [signature]	10/22/90		ENGR	
15.5-1	ENGR J. KREVKES			APP [signature]	2 NOV 90
	ENGR [signature]	10-15-90		APP R. Neal	11/5/90
	ENGR			OMNIPLAN	
	ENGR			LTR E	PCN

NATIONAL AERONAUTICS AND SPACE ADMINISTRATION
LYNDON B. JOHNSON SPACE CENTER HOUSTON, TEXAS

VENDOR DRAWING REFERENCES

SPACE SHUTTLE	TBL NO 15-I
ALL	PAGE 15.I-2 SHEET 2 OF 5

BASIC REV E

FOR DETAILED COMPONENT AND LOGIC INFORMATION REFER TO:

SSSH DWG NO.	SSSH DWG TITLE	VENDOR NAME	VENDOR DWG NO.	VENDOR SHEET NO.	REV	DATE	VENDOR DRAWING TITLE
15.5-2	HATCHES (AIRLOCK AND SPACELAB)	ROCKWELL	V075-332603	ALL		4/75	HATCH ASSY - CREW MODULE AIRLOCK COMPLETE
			332604	ALL		8/90	HATCH - AIRLOCK ASSY
			593301	ALL		4/75	AIRLOCK MECH PROVISIONS
			000003	ALL		8/90	AIRLOCK GENERAL ASSY
			PHOTO NOS. S80-28029 28041 25152 S83-35399 S79-38393				
			M072-593301	ALL	C	4/77	AIRLOCK MECHANISM INSTALLATION

DWG	SIGNATURE	DATE	DWG	SIGNATURE	DATE
15.5-2	ENGR J. KREYKES			ENGR	
	ENGR Jennifer Kreykes	10-15-90		ENGR	
	ENGR			ENGR	
	ENGR			ENGR	
	ENGR			APP Carl Fly	2 Nov 90
	ENGR			APP R T Neal	11/5/90
	ENGR			OMNIPLAN	
	ENGR			LTR E PCN	

NATIONAL AERONAUTICS AND SPACE ADMINISTRATION
LYNDON B. JOHNSON SPACE CENTER HOUSTON, TEXAS

VENDOR DRAWING REFERENCES

SPACE SHUTTLE | TBL NO 15-I

ALL

BASIC REV E

FOR DETAILED COMPONENT AND LOGIC INFORMATION REFER TO:

SSSH DWG NO.	SSSH DWG TITLE	VENDOR NAME	VENDOR DWG NO.	VENDOR SHEET NO.	REV	DATE	VENDOR DRAWING TITLE
15.6 Sheets 1 and 2	CREW SEATS	ROCKWELL	V208-651671	ALL		1/19/89	MOUNT - NEGATIVE G STRAP, PASSENGER SEAT, REWORK
		ROCKWELL	V070-332700	ALL		12/18/89	DOOR - LIOH, FLOOR MIDDECK, X_{CM} 289.00 TO X_{CM} 315.63, ASSY OF
		ROCKWELL	V070-334282	ALL		11/2/89	DOOR-LIOH, FLOOR MIDDECK, X_{CM} 289.060 TO X_{CM} 315.630, ASSEMBLY OF
		ROCKWELL	V070-332701	ALL	E	2/6/90	FLOOR INSTALLATION - MID DECK
		ROCKWELL	V070-334035	ALL	F	5/11/90	FLOOR INSTALLATION - MID DECK, Y_{CM} -50,50 TO Y_{CM} 50.50
		ROCKWELL	V070-773726	21,26	A	2/17/88	WIRE HARN D&C PANEL MA73C (85V73A129W1)
		ROCKWELL	V070-778302	3,81	B	1/24/90	WIRE HARN CREW MODULE MID DECK (80V77W2)
		ROCKWELL	V070-778909	2		1/10/80	WIRE HARN MID DECK MCA PWR (80V77W9)
		ROCKWELL	V570-760209	1	D	10/15/84	SCHEMATIC DIAGRAM - COAS SEAT SUIT CONTROLS CREW SYSTEMS
		ROCKWELL	VS70-760252	1	C	5/14/84	SCHEMATIC DIAGRAM - COAS SEAT/SUIT CONTROLS CREW SYSTEMS
		AMI	1172	ALL	Z/AA	2/16/89	FINAL ASSEMBLY CREW SEAT, SPACE SHUTTLE
		AMI	3172	ALL	AC	10/20/83	FINAL ASSEMBLY PASSENGER SEAT, SPACE SHUTTLE
		AMI	1172-2250	ALL	V	6/30/83	CARRIAGE ASSEMBLY, VERTICAL TRAVEL, SEAT BASE
		AMI	RT1172-2070	ALL	E	1/11/82	ACTIVATOR ASSY - CREW SEAT
		ROCKWELL	MC621-0069	ALL	C	8/15/83	SEATS - OPERATIONAL ORBITER CREW AND PASSENGER
		ROCKWELL	V610-333010	ALL		1/16/89	SEAT SUPPORT - MISSION SPECIALIST NO. 1 ASSY OF

DWG	SIGNATURE	DATE	DWG	SIGNATURE	DATE
15.6-1,2	ENGR T. MALKASIAN			ENGR	
	ENGR Todd J. Malkasian	10/24/90		ENGR	
	ENGR			ENGR	
	ENGR			ENGR	
	ENGR			APP Ron Lewis	24 Oct 90
	ENGR			APP R T Neal	11/5/90
	ENGR			OMNIPLAN	
	ENGR			LTR E PCN	

NATIONAL AERONAUTICS AND SPACE ADMINISTRATION
LYNDON B. JOHNSON SPACE CENTER HOUSTON, TEXAS

VENDOR DRAWING REFERENCES

SPACE SHUTTLE | TBL NO 15-I
ALL

BASIC REV E

FOR DETAILED COMPONENT AND LOGIC INFORMATION REFER TO:

SSSH DWG NO.	SSSH DWG TITLE	VENDOR NAME	VENDOR DWG NO.	VENDOR SHEET NO.	REV	DATE	VENDOR DRAWING TITLE
15.7-1	KU BAND ANTENNA DEPLOY/STOW/ JETTISON	ROCKWELL	VS70-760709	1-11	D	8/29/86	SCHEMATIC DIAGRAM - MOTOR CONTROL ASSEMBLY POWER DISTRIBUTION
		ROCKWELL	VS70-760702	1-12	H	8/29/86	SCHEMATIC DIAGRAM - MOTOR CONTROL ASSY POWER DISTRIBUTION
		ROCKWELL	VS70-590119	1,2,3	B	12/3/85	SCHEMATIC DIAGRAM - KU BAND ANTENNA DEPLOYMENT
		ROCKWELL	VS70-590112	1,2,3	A	11/4/85	SCHEMATIC DIAGRAM - KU BAND ANTENNA DEPLOYMENT
		ROCKWELL	VS70-740102	1-9	H	9/16/88	SCHEMATIC DIAGRAM - KU BAND COMMUNICATIONS SUBSYSTEM
		ROCKWELL	VS70-740109	1-7	D	9/15/88	SCHEMATIC DIAGRAM - KU BAND COMMUNICATIONS SUBSYSTEM
15.7-2	KU BAND MECHANICAL	ROCKWELL	V070-544902	1,2,3	C	7/12/88	MECHANISM ASSEMBLY - KU BAND DEPLOYMENT
		ROCKWELL	V070-744008	1,2,3	A	12/5/85	INSTALLATION, COAXIAL CABLES - KU BAND COMM A RH AND B LH MID FUSELAGE
		ROCKWELL	V070-794041	1	B	3/22/89	INSTALLATION - MID-FUSELAGE UPPER WIRING X_O - 582.00 TO X_O 933.00 RH
15.8 SHEET 1 and 2	MECH SW OV	IBM	NAS9-14444		OI8D	5/22/89	OPERATIONAL DETAIL DESIGN SPECIFICATION

DWG	SIGNATURE	DATE	DWG	SIGNATURE	DATE
15.7-1,2	ENGR D. SIMON			ENGR	
	ENGR D. Simon	10/22/90		ENGR	
15.8-1,2	ENGR C. D. PATERNOSTRO			ENGR	
	ENGR C. D. Paternostro	10/22/90		ENGR	
	ENGR			APP Ralph Ge	2 Nov 90
	ENGR			APP R. Neal	11/5/90
	ENGR			OMNIPLAN	
	ENGR			LTR E	PCN

NATIONAL AERONAUTICS AND SPACE ADMINISTRATION
LYNDON B. JOHNSON SPACE CENTER HOUSTON, TEXAS

VENDOR DRAWING REFERENCES

SPACE SHUTTLE | ALL

TBL NO 15-I

PAGE 15.I-5 | SHEET 5 OF 5

BASIC REV E

Space Shuttle Systems Handbook

Vol. II

Sections 10 through 15

Rev E
December 21, 1990

SD
MOD
JSC
NASA