tank is 21.39 cubic feet, and each stores up to 92 pounds of hydrogen. Each tank weighs 227 pounds dry. Maximum fill time is 45 minutes.

The inner pressure vessels are kept supercold by minimizing conductive, convective, and radiant heat transfer. Twelve low-conductive supports suspend the inner vessel within the outer shell. Radiant heat transfer is reduced by a shield between the inner vessel and outer shell (hydrogen tanks only), and convective heat transfer is minimized by maintaining a vacuum between the vessel and shell. During ground operations, a vacuum ion pump maintains the required vacuum level and is also used as a vacuum gauge to determine the vacuum's integrity. The pump consists of an electrical power supply and an anode, which absorbs free ions between the tank walls.

Cryogenic Tank Heaters

Each hydrogen tank has one heater probe with two elements; each oxygen tank has two heater probes with two elements on each probe. As the reactants are depleted, the heaters add heat energy to maintain a constant pressure in the tanks.

The heaters operate in automatic and manual modes. In the automatic mode, the heater is controlled by a tank heater controller. Each heater controller receives a signal from a tank pressure sensor. If pressure in a tank is less than or equal to a specific pressure, and the controller sends a low pressure signal to the heater logic, the heater is powered on. When the pressure in the tanks goes above that limit, the respective controller sends a high pressure signal to the heater logic, and the heater involved is turned off. The *O2 TK1 (2, 3)* and *H2 TK1 (2, 3) HEATERS* switches (*AUTO, ON, OFF*) for tanks 1, 2, and 3 are located on panel R1; switches for the oxygen and hydrogen tank 4 heaters (tanks 4/5 on OV 102) are on panel A11. (On OV 102, the oxygen and hydrogen tank 4 B heaters are disconnected, and the logic and power are used for the tank 5 A heaters.)

NOTE

The position of switches for the five cryo tank and EDO configurations varies between vehicles.

Heater controller psia		
Pressure limits (psia)	Low	High
H_2 tank 1, 2	200-206	220-226
H_2 tank 3, 4	217-223	237-243
O_2 tank 1, 2	803-819	838-854
O_2 tank 3, 4	832-848	866-882

Tank Pressure Limits

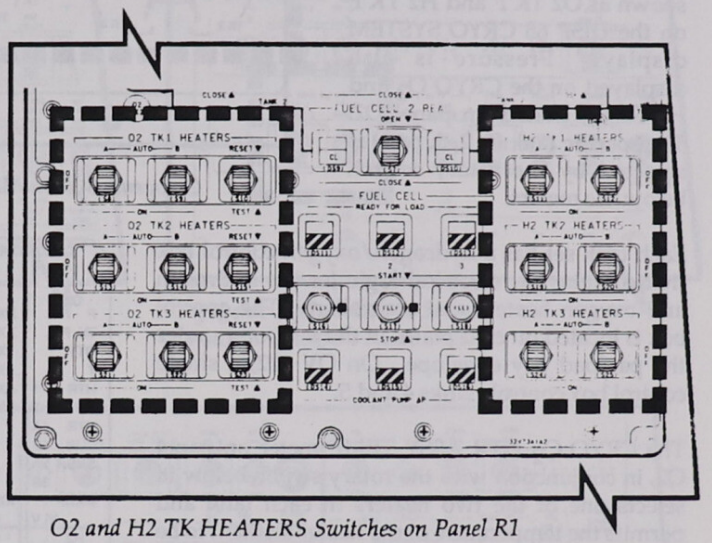

O2 and H2 TK HEATERS Switches on Panel R1

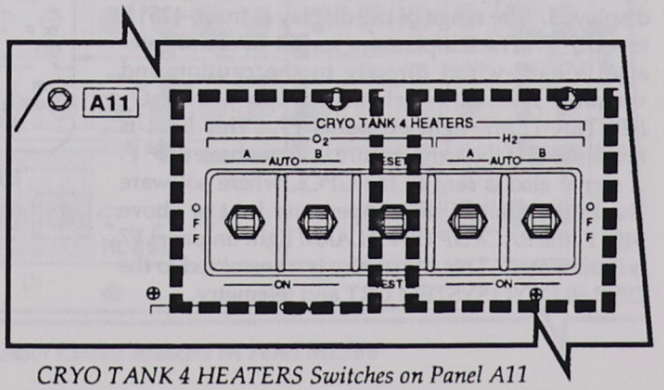

CRYO TANK 4 HEATERS Switches on Panel A11

Dual-mode heater operation is available for pairs of oxygen and hydrogen tanks. If the heaters of both tanks 1 and 2, or tanks 3 and 4, are placed in the automatic mode, the tank heater logic is interconnected. In this case, the heater controllers of both tanks must send a low pressure signal to the heater logic before the heaters will turn on. Once the heaters are on, a high pressure signal from either tank will turn off the heaters in both tanks.

In the manual mode, the flight crew controls the heaters by using the *ON/OFF* positions for each *HEATERS* switch on panel R1 or A11. Pressure in each tank is shown as O2 TK P and H2 TK P on the DISP 68 CRYO SYSTEM display. Pressure is also displayed on the CRYO O_2 and H_2 PRESS meters on panel O2. The specific tank (1, 2, 3, or 4) is selected by the rotary switch below the meters.

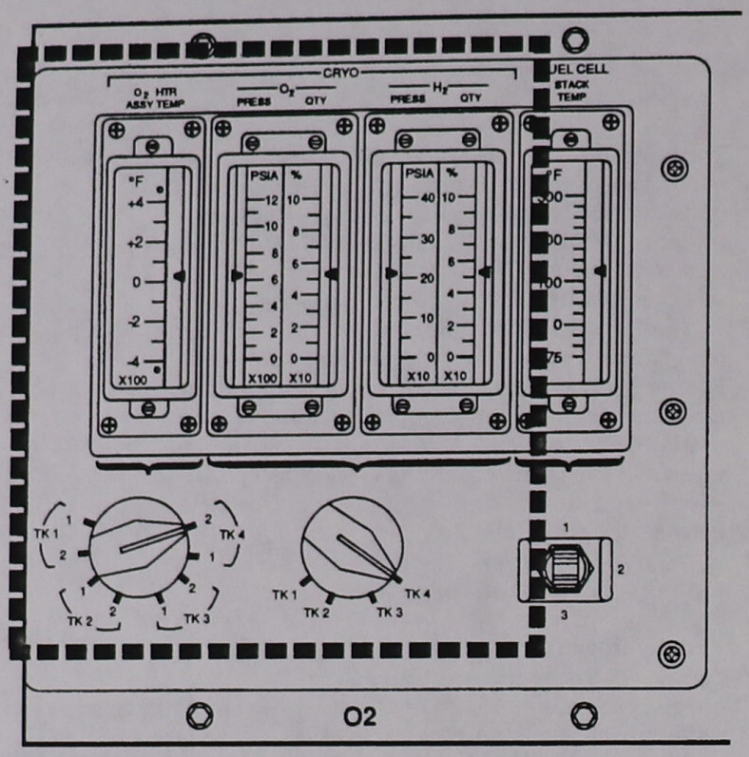

Cryogenic System Meters and Switches on Panel O2

Each tank set has a hydrogen/oxygen control box that contains the electrical logic for the hydrogen and oxygen heaters and controllers. The control box is located on cold plates in the midbody under the payload bay envelope. On OV 102, a single control box controls tanks 4 and 5.

The CRYO O_2 HTR ASSY TEMP meter on panel O2, in conjunction with the rotary switch below it, selects one of the two heaters in each tank and permits the temperature of the heater element to be displayed. The range of the display is from -425° F to +475° F. The temperature sensor in each heater also is hard-wired directly to the caution and warning system, which drives the yellow *O_2 HEATER TEMP* light on panel F7. This light is illuminated if the temperature is at or above 349° F. A signal also is sent to the GPCs, where software checks the limit; if the temperature is at or above 349° F, the *BACKUP C/W ALARM* light on panel F7 is illuminated. This signal also is transmitted to the DISP 68 CRYO SYSTEM CRT and telemetry.

XXXX/XXX/068 CRYO SYSTEM XX X DDD/HH:MM:SS
DDD/HH:MM:SS

	TK				
O2	1	2	3	4	5
P	XXXXS	XXXXS	XXXXS	XXXXS	
TK P	XXXXS	XXXXS	XXXXS	XXXXS	XXXXS
QTY	XXXS	XXXS	XXXS	XXXS	XXXS
T	±XXXS	±XXXS	±XXXS	±XXXS	±XXXS
HTR T 1	±XXXS	±XXXS	±XXXS	±XXXS	±XXXS
2	±XXXS	±XXXS	±XXXS	±XXXS	±XXXS
HTR 1A	S	S	S	S	S
CUR 1B	S	S	S	4/5S	S
SNSR 2A	S	S	S	S	S
2B	S	S	S	4/5S	S
MANF P	XXXXS	XXXXS			
VLV	XXS	XXS			
H2					
P	XXXS	XXXS	XXXS		XXXS
TK P	XXXS	XXXS	XXXS	XXXS	XXXS
QTY	XXXS	XXXS	XXXS	XXXS	±XXXS
T	±XXXS	±XXXS	±XXXS	±XXXS	±XXXS
HTR T	±XXXS	±XXXS	±XXXS	±XXXS	
MANF P	XXXS	XXXS			
VLV	XXS	XXS			

(XX)

DISP 68 CRYO SYSTEM Display (onorbit)

Two current level detectors are built into the circuit of each oxygen tank heater to interrupt power in case of electrical shorts. The second detector is redundant. Each detector is divided into A and B detectors, which monitor the heater A current and the heater B current respectively. The detectors are powered by circuit breakers on panels O14, O15, O16, and ML86B. The detectors monitor the current in and out of a heater. If the current difference is 0.9 amp or greater for 1.5 milliseconds,

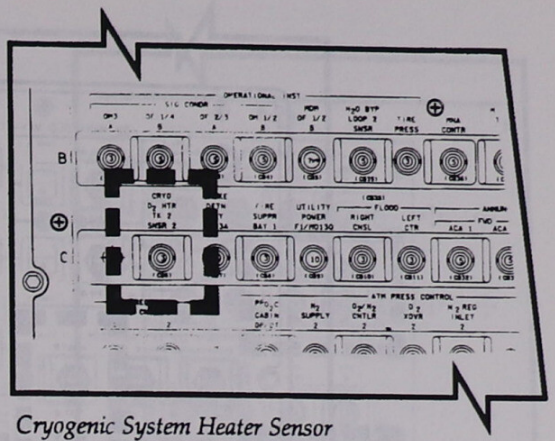

Cryogenic System Heater Sensor Circuit Breaker on Panel O15

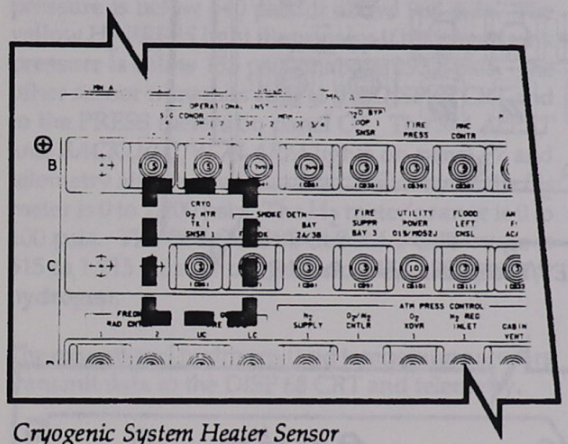

Cryogenic System Heater Sensor Circuit Breaker on Panel O14

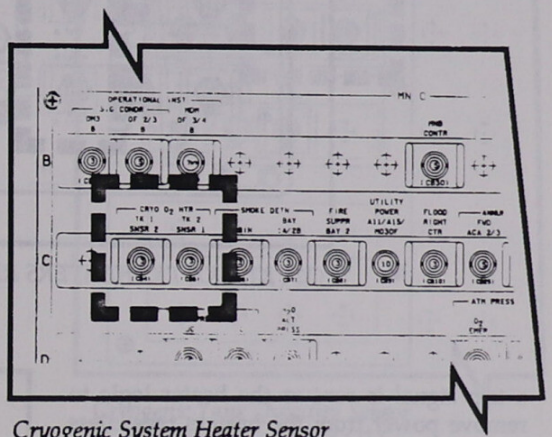

Cryogenic System Heater Sensor Circuit Breakers on Panel O16

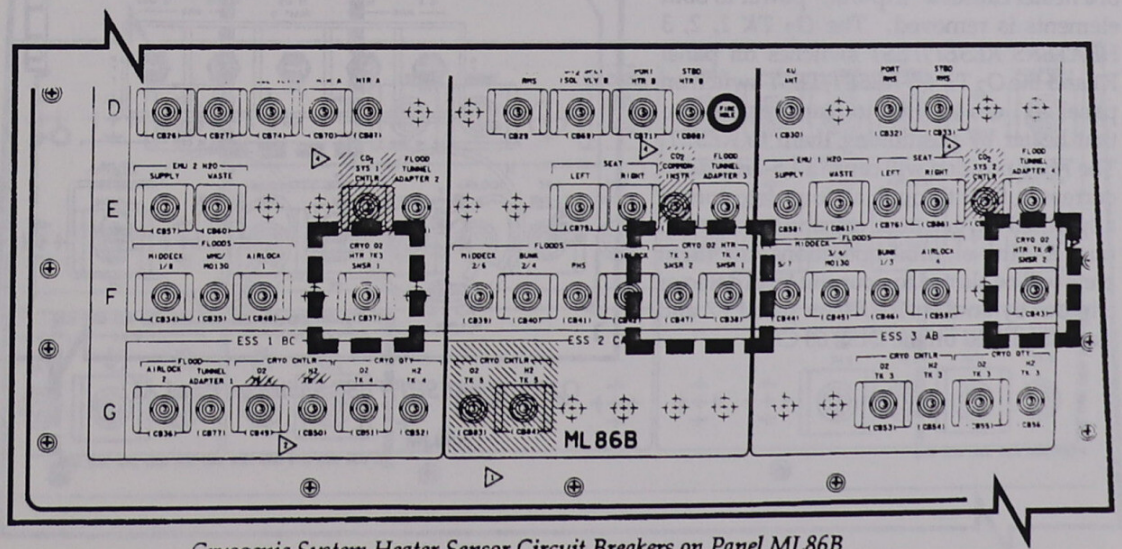

Cryogenic System Heater Sensor Circuit Breakers on Panel ML86B

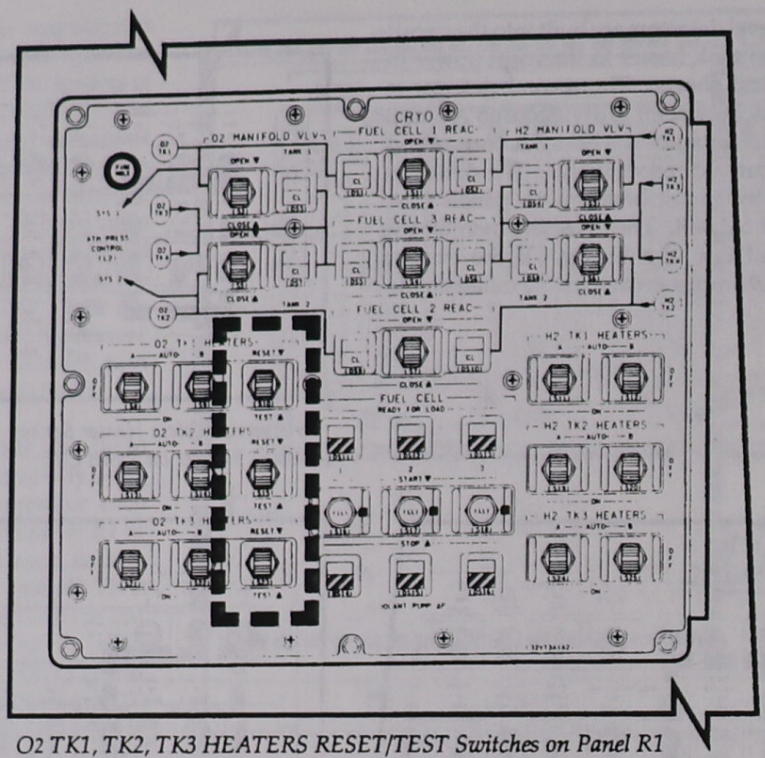

O2 TK1, TK2, TK3 HEATERS RESET/TEST Switches on Panel R1

a trip signal is sent to the heater logic to remove power from the heaters regardless of the heater switch position. If one element of a heater causes a "trip-out," power to both elements is removed. The *O_2 TK 1, 2, 3 HEATERS RESET/TEST* switches on panel R1 and the *O_2 TK 4/5 RESET/TEST* switch on panel A11 can be used to reapply power to that heater by positioning them to *RESET*. The *TEST* position will cause a 1.5-amp delta current to flow through all four detectors of a specified oxygen tank, causing them to trip out. During on-orbit operations, the flight crew will be alerted to a current level detector trip-out by an *SM ALERT* on panel F7 and data displayed on the DISP 68 CRT.

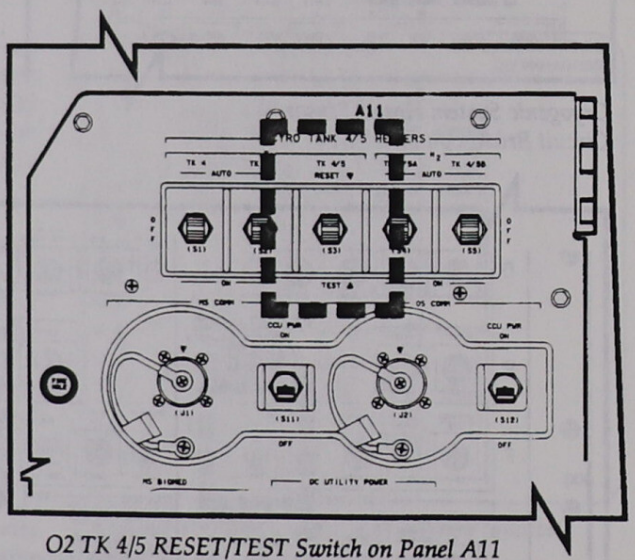

O2 TK 4/5 RESET/TEST Switch on Panel A11

Each oxygen and hydrogen tank has a quantity sensor powered by a circuit breaker. These are identified on panel O13 as *CRYO QTY* O_2 (or H_2) *TK 1* and *TK 2* and on panel ML86B as *CRYO QTY* O_2 (or H_2) *TK 3*, *TK 4*, and *TK 5*. Data from the quantity sensors are sent to panel O2, where the rotary switch below the meters is used to select the tank for display on the CRYO O_2 (or H_2) QTY meters. The range of the meters is zero to 100 percent. The data are also sent to the DISP 68 CRT.

There are two tank pressure sensors for each oxygen and hydrogen tank. One sensor transmits its data to the DISP 68 CRT, the tank heater controllers, and the caution and warning matrix on panel F7. The yellow *O_2 PRESS* light is illuminated if oxygen tank pressure is below 540 psia or above 985 psia. The yellow *H_2 PRESS* light illuminates if hydrogen tank pressure is below 153 psia or above 293.8 psia. The other sensor transmits data to the DISP 68 CRT and to the PRESS meters on panel O2. The *SM ALERT* and *BACKUP C/W ALARM* lights on panel F7 and telemetry also receive the data. The range of the O_2 meter is 0 to 1,200 psia. The H_2 meter's range is 0 to 400 psia. The BFS SM SYS SUMM 1 CRT range is 515 to 1,215 psia for oxygen and 145 to 305 psia for hydrogen.

The oxygen and hydrogen fluid temperature sensors transmit data to the DISP 68 CRT and telemetry.

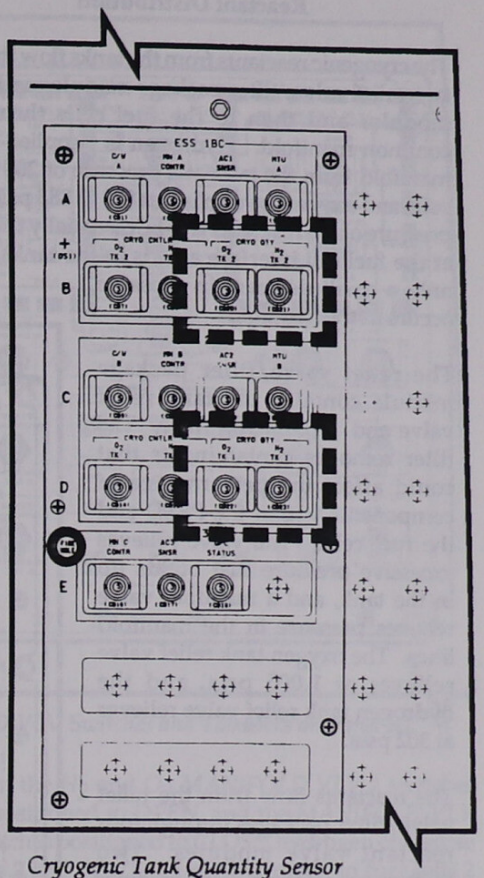

Cryogenic Tank Quantity Sensor Circuit Breakers on Panel O13

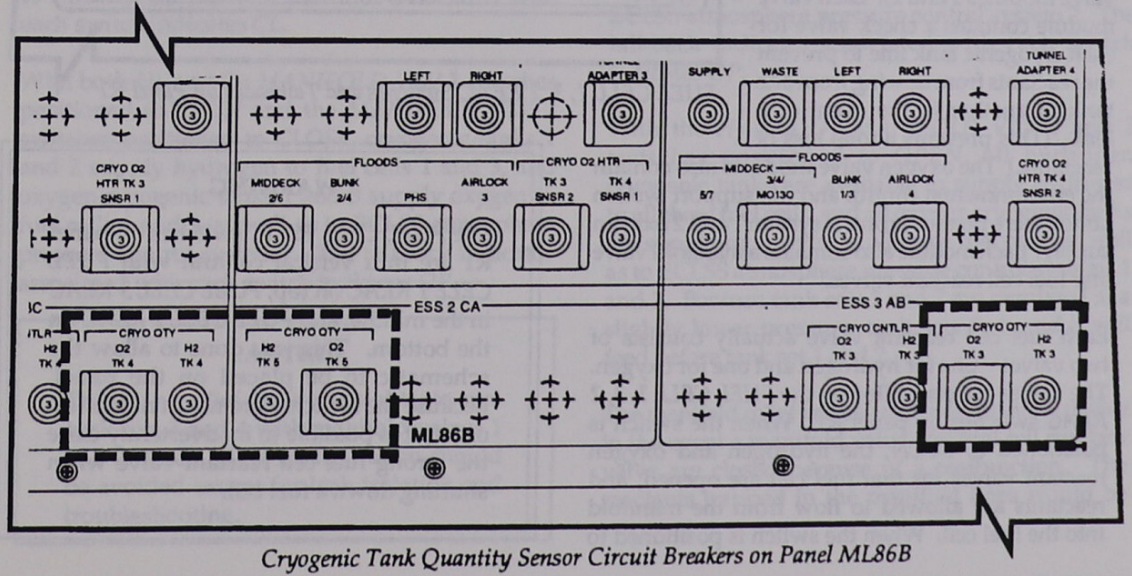

Cryogenic Tank Quantity Sensor Circuit Breakers on Panel ML86B

Reactant Distribution

The cryogenic reactants from the tanks flow through two relief valve/filter package modules and valve modules and then to the fuel cells through a common manifold. Hydrogen is supplied to the manifold from the tank at a pressure of 200 to 243 psia, and oxygen is supplied at 803 to 883 psia. The pressure of the reactants will be essentially the same at the fuel cell interface as it is in the tanks, since only a small decrease in pressure occurs in the manifolds.

The relief valve/filter package module contains the tank relief valve and a 12-micron filter. The filter removes contaminants that could affect the performance of components within the PRSD and the fuel cells. The valve relieves excessive pressure that builds up in the tank, and a manifold valve relieves pressure in the manifold lines. The oxygen tank relief valve relieves at 1,005 psia, and the hydrogen tank relief valve relieves at 302 psia.

The reactants flow from the relief valve/filter packages through four reactant valve modules: two hydrogen (hydrogen valve modules 1 and 2) and two oxygen (oxygen valve modules 1 and 2). Each valve module contains a check valve for each cryogenic tank line to prevent the reactants from flowing from one tank to another in the event of a leak. (This prevents a total loss of reactants.) The oxygen valve modules also contain the environmental control and life support system atmosphere pressure control system 1 and 2 oxygen supply. Each module also contains a manifold valve and fuel cell reactant valves.

Each fuel cell reactant valve actually consists of two valves—one for hydrogen and one for oxygen. The valves are controlled by the *FUEL CELL 1, 3, 2 REAC* switches on panel R1. When the switch is positioned to *OPEN*, the hydrogen and oxygen reactant valves for that fuel cell are opened, and reactants are allowed to flow from the manifold into the fuel cell. When the switch is positioned to *CLOSE*, the hydrogen and oxygen reactant valves for that fuel cell are closed, isolating the reactants from the fuel cell and rendering that fuel cell inoperative. Each *FUEL CELL REAC* switch on panel R1 also has two talkback indicators, one on each side of the switch. The corresponding talkback indicates *OP* when the valve is *OPEN* and *CL* when the valve is closed. Redundant capability to close reactant valves via switches on panel C3 is being added to each vehicle.

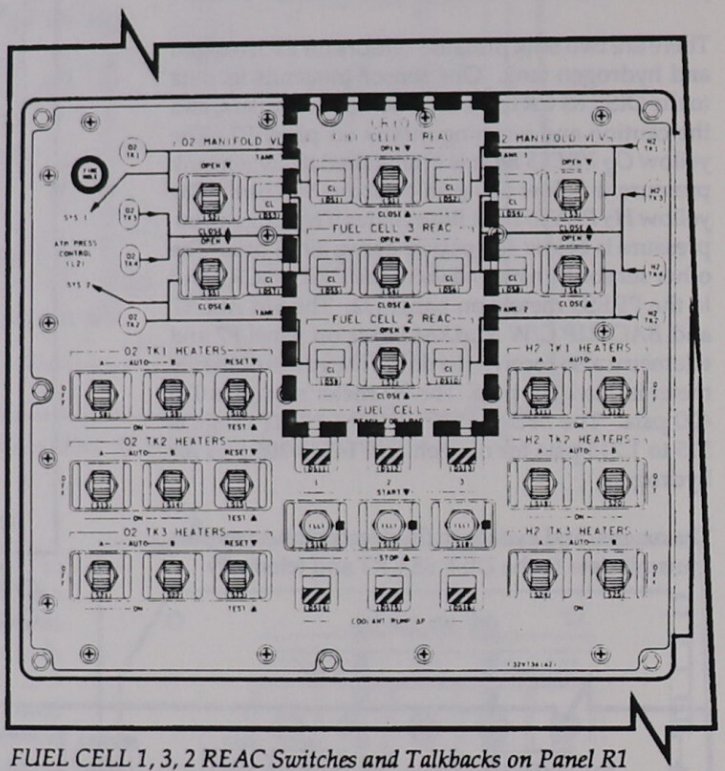

FUEL CELL 1, 3, 2 REAC Switches and Talkbacks on Panel R1

WARNING

The *FUEL CELL REAC* switches on panel R1 are in a vertical column with *FUEL CELL 1 REAC* on top, *FUEL CELL 3 REAC* in the middle, and *FUEL CELL 2 REAC* on the bottom. This was done to allow the schematic to be placed on the panel. Because the switches are not in numerical order, it is possible to inadvertently close the wrong fuel cell reactant valve when shutting down a fuel cell.

It is critical to have reactants available to the fuel cells. When any fuel cell reactant valve is closed, the red *FUEL CELL REAC* light on panel F7 is illuminated, a caution/warning tone is sounded. The computers sense the closed valve, which causes the *BACKUP C/W ALARM* light on panel F7 to be illuminated, an *SM ALERT* to occur, and the data to be displayed on the DISP 68 and SM SYS SUMM 1 CRTs. This alerts the flight crew that the fuel cell will be inoperative within approximately 20 to 30 seconds (varies with power loading) for a hydrogen valve closure and 130 seconds for an oxygen valve closure.

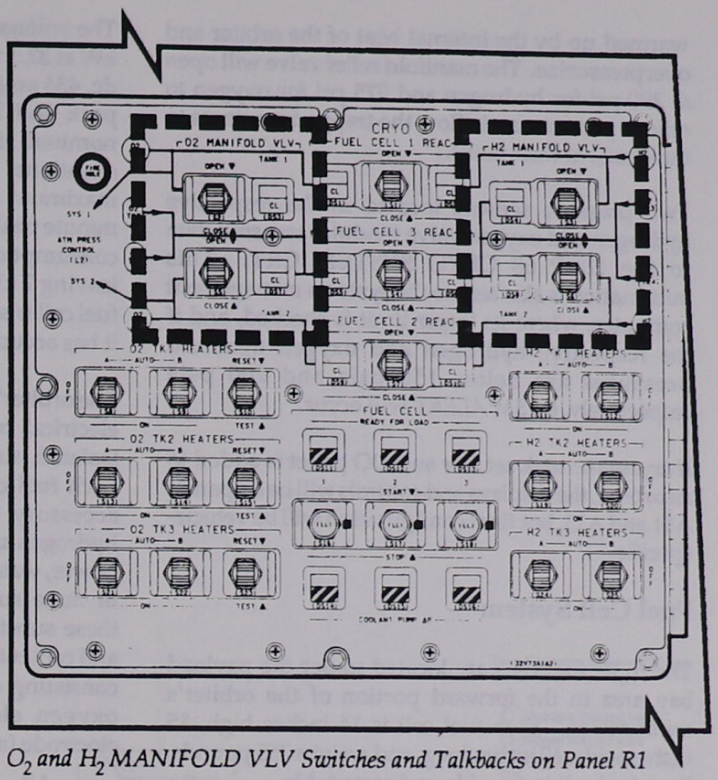

O_2 and H_2 MANIFOLD VLV Switches and Talkbacks on Panel R1

The O_2 and H_2 *MANIFOLD VLV* switches on panel R1 control the respective hydrogen and oxygen manifold valve. When the two hydrogen and two oxygen manifold valves are in the *CLOSE* position, fuel cell 1 receives reactants from cryogenic tank set 1, fuel cell 2 receives reactants from cryogenic tank set 2, and fuel cell 3 receives reactants from cryogenic tank sets 3 and 4. ECLSS atmosphere pressure control system 1 receives oxygen from oxygen tank 1, and system 2 receives oxygen from oxygen tank 2. When the switches are positioned to *CLOSE*, the talkback indicator associated with each switch indicates *CL*.

With both H_2 and O_2 *MANIFOLD VLV 1* switches positioned to *OPEN* and the *MANIFOLD VLV 2* switches positioned to *CLOSE*, cryogenic tanks 1 and 2 supply hydrogen to fuel cells 1 and 3, and oxygen cryogenic tanks 1 and 3 supply oxygen to fuel cells 1 and 3, as well as to ECLSS atmosphere pressure control system 1. The talkback indicator associated with each switch indicates *OP*.

CAUTION

There is no relief valve or insight into cryo tank sets 3 and 4 with manifold valves 1 and 2 closed. This configuration should be avoided except for leak isolation and troubleshooting.

When the H_2 and O_2 *MANIFOLD VLV 2* switches are positioned to *OPEN*, and the *MANIFOLD VLV 1* switch is positioned to *CLOSE*, hydrogen cryogenic tanks 2 and 3/4/5 supply hydrogen to fuel cells 2 and 3, and oxygen cryogenic tanks 2 and 3/4/5 supply oxygen to fuel cells 2 and 3, as well as to ECLSS atmosphere pressure control system 2. The talkback indicator associated with each switch indicates *OP*.

With the H_2 and O_2 *MANIFOLD VLV 1* and 2 switches positioned to *OPEN*, all hydrogen cryogenic tanks are available to supply hydrogen to all three fuel cells, and all oxygen cryogenic tanks are supplying oxygen to all three fuel cells, as well as to ECLSS atmosphere pressure control systems 1 and 2. Because tank sets 1 and 2 are regulated at a slightly lower pressure, tank sets 3, 4, and 5 will feed before tank set 1 and 2.

The manifold relief valves are a built-in safety device in the event a manifold valve and fuel cell reactant valve are closed because of a malfunction. The reactants trapped in the manifold lines would be

warmed up by the internal heat of the orbiter and overpressurize. The manifold relief valve will open at 290 psi for hydrogen and 975 psi for oxygen to relieve pressure and allow the trapped reactants to flow back to their tanks.

Two pressure sensors located in the respective hydrogen and oxygen valve modules transmit data to the DISP 68 CRYO SYSTEM CRT. This information is also sent to the systems management computer, where its lower limit is checked, and if the respective hydrogen and oxygen manifold pressures are below 150 psia and 200 psia respectively, an *SM ALERT* will occur.

If cryogenic tank set 5 or an EDO pallet is added to an orbiter, the displays and controls will be on panels A11 and A15, but final configuration will be vehicle-specific.

Fuel Cell System

The three fuel cells are located under the payload bay area in the forward portion of the orbiter's midfuselage. Each fuel cell is 14 inches high, 15 inches wide, 40 inches long, and weighs 255 pounds. Each fuel cell is reusable and restartable.

The three fuel cells are individually coupled to the reactant (hydrogen and oxygen) distribution subsystem, the heat rejection subsystem, the potable water storage subsystem, and the electrical power distribution and control subsystem. The fuel cells generate heat and water as by-products of electrical power generation. The excess heat is directed to fuel cell heat exchangers, where it is rejected to the Freon coolant loops. The water is directed to the potable water storage subsystem for the environmental control and life support system.

ACCESSORIES	POWER
• Reactant flow monitor • Heat rejection • Water rejection • Thermal control • Cell performance monitor • Electrical control unit	96 cells Converts H_2 & O_2 into: • Power • Potable water • Heat

Fuel Cell Block Diagram

The voltage and current range of each fuel cell is 2 kW at 32.5 volts dc, 61.5 amps to 12 kW at 27.5 volts dc, 436 amps. Each is capable of supplying 16 kW peak and 7 kW maximum continuous power in nominal situations, and 10 kW in off-nominal situations. The three fuel cells are capable of a maximum continuous output of 21 kW with 15-minute peaks of 36 kW. The average on-orbit power consumption of the orbiter is approximately 14 kW, leaving 7 kW average available for payloads. Each fuel cell is serviced between flights and reused until it has accumulated 2,000 hours of on-line service.

The orbiter's three fuel cells operate as independent electrical power sources, each supplying its own isolated, simultaneously operating 28-volt dc bus. Each fuel cell consists of a power section and an accessory section. The power section, where hydrogen and oxygen are transformed into electrical power, water, and heat, consists of 96 cells contained in three substacks. Manifolds run the length of these substacks and distribute hydrogen, oxygen, and coolant to the cells. The cells contain electrolytes consisting of potassium hydroxide and water, an oxygen electrode (cathode), and a hydrogen electrode (anode).

The accessory section monitors the reactant flow, removes waste heat and water from the chemical reaction, and controls the temperature of the stack. The accessory section consists of the hydrogen and oxygen flow system, the coolant loop, and the electrical control unit.

Oxygen is routed to the fuel cell's oxygen electrode, where it reacts with the water and returning electrons to produce hydroxyl ions. The hydroxyl ions then migrate to the hydrogen electrode, where they enter into the hydrogen reaction. Hydrogen is routed to the fuel cell's hydrogen electrode, where it reacts with the hydroxyl ions from the electrolyte. This electrochemical reaction produces electrons (electrical power), water, and heat. The electrons are routed through the orbiter's electrical power distribution and control subsystem to perform electrical work. The oxygen and hydrogen are reacted (consumed) in proportion to the orbiter's electrical power demand.

Excess water vapor is removed by an internal circulating hydrogen system. Hydrogen and water vapor from the reaction exits the cell stack, is mixed

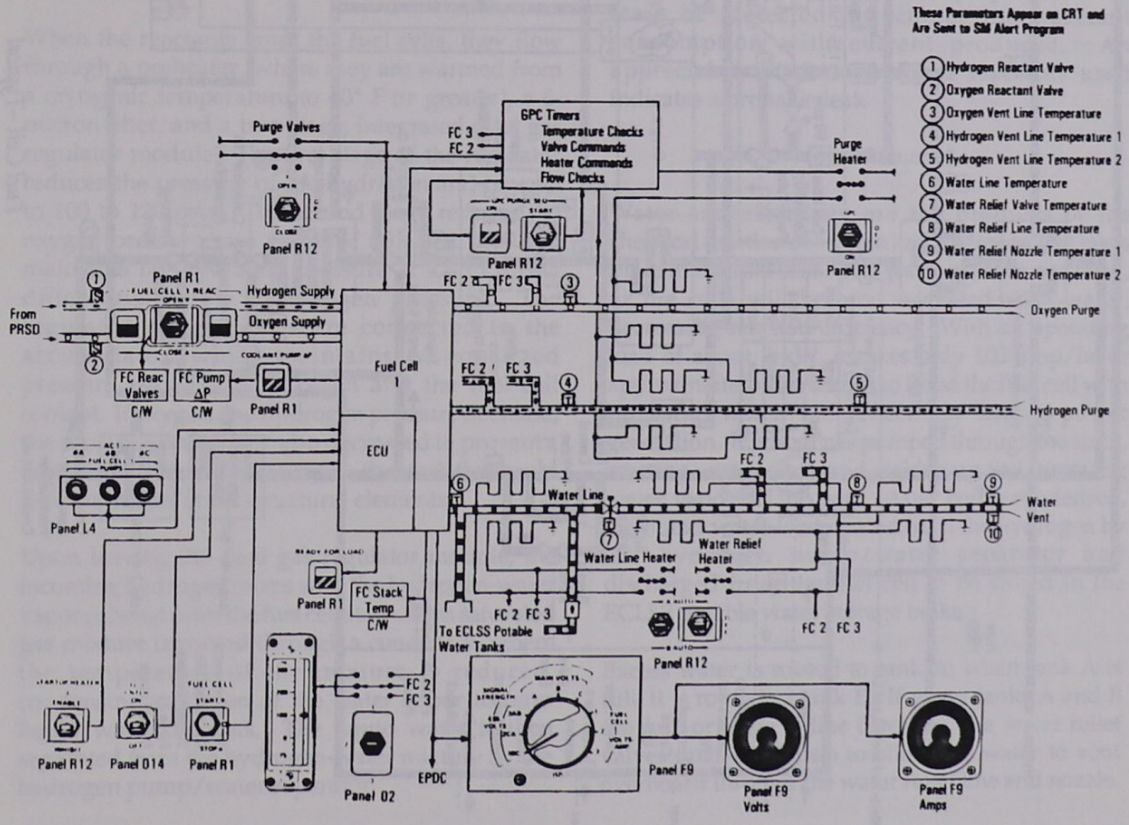

Fuel Cell 1 Typical Displays and Controls

Fuel Cell –Typical

These Parameters Appear on CRT and Are Sent to SM Alert Program

1. Oxygen Flow Rate
2. Hydrogen Flow Rate
3. FC Voltage
4. FC Current
5. Stack Coolant Outlet Temperature
6. Condenser Exit Temperature
7. Coolant Return Temperature
8. Coolant Pressure
9. Coolant Pump Status
10. Water Purity Sensor
11. Stack Inlet Temperature
12. Hydrogen Pump Current Monitoring

with replenishing hydrogen from the storage and distribution system, and enters a condenser, where waste heat from the hydrogen and water vapor is transferred to the fuel cell coolant system. The resultant temperature decrease condenses some of the water vapor to water droplets. A centrifugal water separator extracts the liquid water and pressure-feeds it to potable tanks in the lower deck of the pressurized crew cabin. Water from the potable water storage tanks can be used for crew consumption and for cooling the Freon loops by feeding the flash evaporator system. The remaining circulating hydrogen is directed back to the fuel cell stack.

The fuel cell coolant system circulates a liquid fluorinated hydrocarbon and transfers the waste heat from the cell stack through the fuel cell heat exchanger to the Freon coolant loop system in the midfuselage. Internal control of the circulating fluid maintains the cell stack at a load-dependent operating temperature of approximately 200° F.

When the reactants enter the fuel cells, they flow through a preheater (where they are warmed from a cryogenic temperature to 40° F or greater), a 6-micron filter, and a two-stage, integrated dual gas regulator module. The first stage of the regulator reduces the pressure of the hydrogen and oxygen to 100 to 120 psia. The second stage reduces the oxygen pressure to a range of 60 to 62 psia and maintains the hydrogen pressure at 4.5 to 6 psia differential below the oxygen pressure. The regulated oxygen lines are connected to the accumulator, which maintains an equalized pressure between the oxygen and the fuel cell coolant. If oxygen and hydrogen pressure decrease, the coolant's pressure is also decreased to prevent a large differential pressure inside the stack that could deform the cell stack structural elements.

Upon leaving the dual gas regulator module, the incoming hydrogen mixes with the hydrogen-water vapor exhaust from the fuel cell stack. This saturated gas mixture is routed through a condenser, where the temperature of the mixture is reduced, condensing a portion of the water vapor to form liquid water droplets. The liquid water is then separated from the hydrogen-water mixture by the hydrogen pump/water separator.

The hydrogen pump uses three-phase ac power to circulate the hydrogen gas back to the fuel cell stack, where some of the hydrogen is consumed in the reaction. The remainder flows through the fuel cell stack, removing the product water vapor formed at the hydrogen electrode. The hydrogen-water vapor mixture then combines with the regulated hydrogen from the dual gas generator module, and the loop begins again. The performance at the pump is monitored via the H_2 pump status voltage.

The oxygen from the dual gas regulator module flows directly through two ports into a closed-end manifold in the fuel cell stack, achieving optimum oxygen distribution in the cells. All oxygen that flows into the stack is consumed, except during purge operations.

Reactant consumption is directly related to the electrical current produced: if there are no internal or external loads on the fuel cell, no reactants will be used. Because of this direct proportion, leaks may be detected by comparing reactant consumption with current produced. An appreciable amount of excess reactants used indicates a probable leak.

Water Removal

Water and electricity are the products of the chemical reaction of oxygen and hydrogen that takes place in the fuel cells. The water must be removed, or the cells will become saturated with water, decreasing reaction efficiency. With an operating load of about 7 kW, it takes only 100 amp/hr or approximately 20 minutes to flood the fuel cell with produced water, thus effectively halting power generation. Hydrogen is pumped through the stack, reacting with oxygen and picking up and removing water vapor on the way. After being condensed, the liquid water is separated from the hydrogen by the hydrogen pump/water separator and discharged from the fuel cell to be stored in the ECLSS potable water storage tanks.

Excess water is routed to tank A; when tank A is full, it is routed to tank B. If water tanks A and B are full, or there is line blockage, the water relief valves open at 45 psia to allow the water to vent overboard through the water relief line and nozzle.

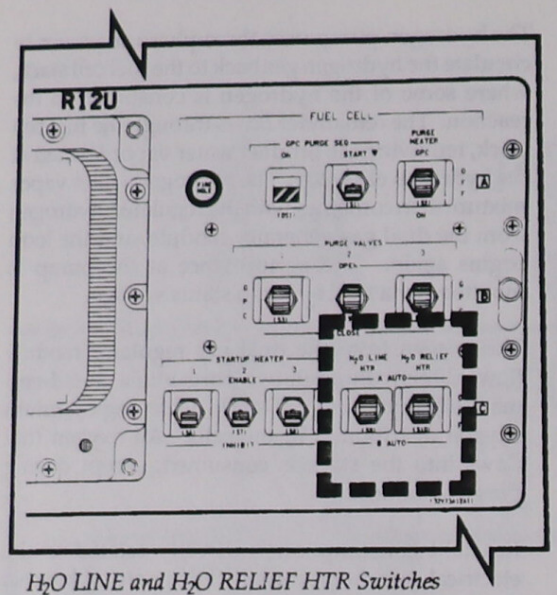

H_2O LINE and H_2O RELIEF HTR Switches on Panel R12U

specific fuel cell. Temperature sensors located on the fuel cell water discharge line, relief valve, relief line, and vent nozzle are displayed on the DISP 69 FUEL CELLS CRT.

```
XXXX/XXX/069      FUEL CELLS          XX X DDD/HH:MM:SS
                                            DDD/HH:MM:SS
                        FC
                    1     2     3
VOLTS             XX.XS XX.XS XX.XS
AMPS               XXXS  XXXS  XXXS
FLOW O2           XX.XS XX.XS XX.XS
     H2            X.XS  X.XS  X.XS
REAC O2            XXS   XXS   XXS
     H2            XXS   XXS   XXS
STACK T          ±XXXS ±XXXS ±XXXS
EXIT  T           XXXS  XXXS  XXXS
COOL  T           XXXS  XXXS  XXXS
      P           XXXS  XXXS  XXXS
   PUMP            XXS   XXS   XXS
H2 PUMP            X.XS  X.XS  X.XS
  READY            XXXS  XXXS  XXXS

H2O
PRI LN T          XXXS  XXXS  XXXS
   VLV T          XXXS  XXXS  XXXS
ALT LN T          XXXS  XXXS  XXXS

H2O LINE RLF LINE T          XXXS
                 NOZ T A     XXXS
                       B     XXXS
             HTR SW          XXXS
PURGE LN     O2 T            XXXS
             H2 T1           XXXS
                T2           XXXS
H2O LINE     PH              XXS

                        FC
                    1     2     3
PH                 XXS   XXS   XXS
ΔV          SS1   XXXS  XXXS  XXXS
            SS2   XXXS  XXXS  XXXS
            SS3   XXXS  XXXS  XXXS

                                (XX)
```

FUEL CELLS CRT Display (DISP 69)

Check valves prevent water tanks from discharging through an open relief valve. An alternate water delivery path is also available to deliver water to the ECLSS tanks if the primary path is lost.

For redundancy, two thermostatically activated heaters are wrapped around the discharge and relief lines to prevent blockage caused by the formation of ice in the lines. Two switches on panel R12U, *H_2O LINE HTR* and *H_2O RELIEF HTR*, provide the flight crew with the capability to select either *A AUTO* or *B AUTO* for the fuel cell water discharge line heaters and the water relief line and vent heaters respectively.

Thermostatically controlled heaters will maintain the water line temperature above 53° F, when required. The normal temperature of product water is approximately 140° to 150° F. The thermostatically controlled heaters maintain the water relief valve's temperature when in use between 70° to 100° F.

Fuel cell 1, 2, or 3 dc voltage and current can be monitored on the DC VOLTS and DC AMPS/SIG STR meters on panel F9, using the rotary switch below the meters to select a

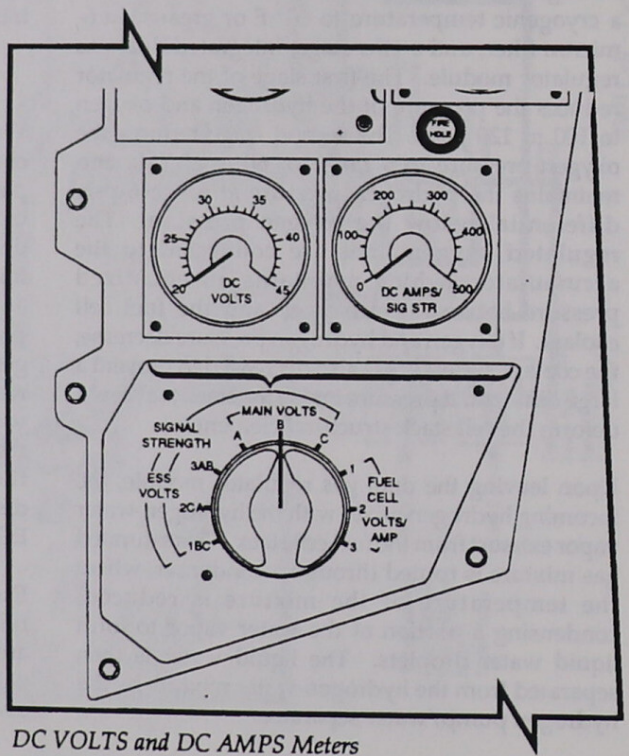

DC VOLTS and DC AMPS Meters and Rotary Switch on Panel F9

If the potassium hydroxide electrolyte in the fuel cell migrates into the product water, a pH sensor located downstream of the hydrogen pump/water separator and a redundant common pH sensor will sense the presence of the electrolyte, and the crew will be alerted by an *SM ALERT* and display on the CRT. The common pH sensor is located downstream of the interface between each fuel cell's primary water path, prior to entering the ECLSS.

Fuel Cell Purge

During normal fuel cell operation, the reactants are present in a closed-loop system and are 100 percent consumed in the production of electricity. Any inert gases or other contaminants will accumulate in and around the porous electrodes in the cells and reduce the reaction efficiency and electrical load support capability. Purging is required at least twice daily to cleanse the cells. The purge sequence can be controlled manually by the crew, automatically by flight software, or via commands sent by Mission Control. When a purge is initiated by opening the purge valves, the oxygen and hydrogen systems become open-loop systems; increased flows allow the reactants to circulate through the stack, pick up the contaminants, and blow them overboard through the purge lines and vents. Electrical power is produced throughout the purge sequence. No more than 10 kilowatts should be required from a fuel cell being purged because of the increased reactant flow and preheater limitations.

Fuel cell purge can be activated automatically or manually by the use of switches on panel R12U. In the automatic mode, the *FUEL CELL PURGE HEATER* switch is positioned to *GPC*. The purge line heaters are turned on to heat the purge lines to ensure that the reactants will not freeze in the lines. The hydrogen reactant is the more likely to freeze because it is saturated with water vapor. Depending on the orbit trajectory and vehicle orientation, the heaters may require 27 minutes to heat the lines to the required temperatures. The crew checks the fuel cell current to ensure a load of less than 350 amps due to limitations on the hydrogen and oxygen preheaters in the fuel cells. As the current output of the fuel cell increases, the reactant flow rates increase and the preheaters raise the temperature of the reactants to a minimum of -40° F in order to prevent the seals in the dual gas regulator from freezing prior to purging. The crew also checks that the fuel cell is not shut down, that time to deorbit is not more than 3 hours, and, for an automatic purge, that an SM OPS transition is not scheduled within the next hour.

The purge lines from all three fuel cells are manifolded together downstream of their purge valves and associated check valves. The line leading to the purge outlet is sized to permit unrestricted flow from only one fuel cell at a time.

NOTE

If purging of more than one cell at a time is attempted, pressure may build in the purge outlet line and may cause a decrease in the flow rate through the individual cells, which could result in an inefficient purge.

When the *FUEL CELL PURGE VALVES 1, 2,* and *3* switches on panel R12U are positioned to *GPC*, the *FUEL CELL GPC PURGE SEQ* switch is positioned to *START* and must be held until 3 seconds after the talkback indicator beside the switch indicates gray. The automatic purge sequence will not begin if the indicator indicates barberpole. The GPC turns the purge line heaters on and monitors the temperature. The one oxygen line temperature sensor must register at least 69° F, and the two hydrogen line temperature sensors 79° and 40° F respectively, and the temperatures must be verified by the GPC before

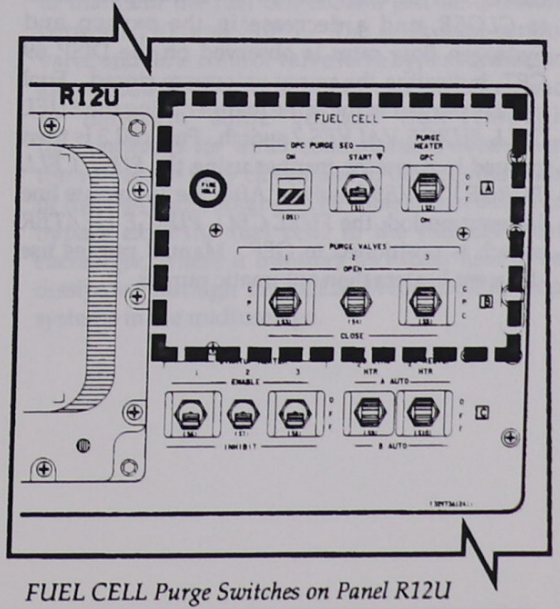

FUEL CELL Purge Switches on Panel R12U

the purge sequence begins. If the temperatures are not up to minimum after 27 minutes, the GPC will issue an *SM ALERT* and display the data on the DISP 69 CRT. When the proper temperatures have been attained, the GPC will open the hydrogen and oxygen purge valves for fuel cells 1, 2, and 3 (in that order) for 2 minutes and then close them. Thirty minutes after the fuel cell 3 purge valves have been closed (to ensure that the purge lines have been totally evacuated), the GPC will turn off the purge line heaters. This provides sufficient time and heat to bake out any remaining water vapor. If the heaters are turned off before 30 minutes have elapsed, water vapor left in the lines may freeze. The GPC purge sequence start can also be initiated using the SPEC 60 SM TABLE MAINT display. The sequence is normally performed by Mission Control uplink on orbit.

A manual fuel cell purge would also be initiated by the flight crew using the switches on panel R12U. In the manual mode, the three fuel cells must be purged separately. The *FUEL CELL PURGE HEATER* switch is positioned to *ON* for the same purpose as in the automatic mode, and the flight crew verifies that the temperatures of the oxygen line and two hydrogen lines are at the same minimum temperatures as in the automatic mode before the purge sequence is initiated. The *FUEL CELL PURGE VALVES 1* switch is then positioned to *OPEN* for 2 minutes, and the flight crew observes that the oxygen and hydrogen flow rates increase on the DISP 69 CRT. The switch is then positioned to *CLOSE*, and a decrease in the oxygen and hydrogen flow rates is observed on the DISP 69 CRT, indicating the purge valves are closed. Fuel cell 2 is purged in the same manner using the *FUEL CELL PURGE VALVES 2* switch. Fuel cell 3 is then purged in the same manner using the *FUEL CELL PURGE VALVES 3* switch. After the 30-minute line bakeout period, the *FUEL CELL PURGE HEATER* switch is positioned to *OFF*. Manual purges use different heaters than automatic purges.

Fuel Cell Cooling/Temperature Control

In order to cool the fuel cell stack during its operations, distribute heat during fuel cell starting, and warm the cryogenic reactants entering the stack, the fuel cell circulates fluorinated hydrocarbon throughout the fuel cell. The fuel cell coolant loop and its interface with the ECLSS Freon coolant loops are identical in fuel cells 1, 2, and 3.

Where the coolant enters the fuel cell, the temperature of the coolant returning from the Freon coolant loops is sensed before it passes through a 75-micron filter. After the filter, two temperature-controlled mixing valves allow some of the hot coolant to mix with the cool returning coolant to prevent the condenser exit control valve from oscillating. The control valve adjusts the flow of the coolant through the condenser to maintain the hydrogen-water vapor exiting the condenser at a temperature between 148° and 153° F.

The stack inlet control valve maintains the temperature of the coolant entering the stack between 177° and 187° F. The accumulator interfaces with the oxygen cryogenic reactant to maintain an equalized pressure between the oxygen and the coolant (the oxygen and hydrogen pressures are controlled at the dual gas regulator) to preclude a high-pressure differential in the stack. The pressure in the coolant loop is sensed before the coolant enters the stack.

The coolant is circulated through the fuel cell stack to absorb the waste heat from the hydrogen/oxygen reaction occurring in the individual cells. After the coolant leaves the stack, its temperature is sensed and the data transmitted to the GPC, to the FUEL CELL STACK TEMP meter through the three-position switch located below the meter on panel O2, and to the DISP 69 CRT display. The yellow *FUEL CELL STACK TEMP*, the red *BACKUP C/W ALARM* light, and the *SM ALERT* light on panel F7

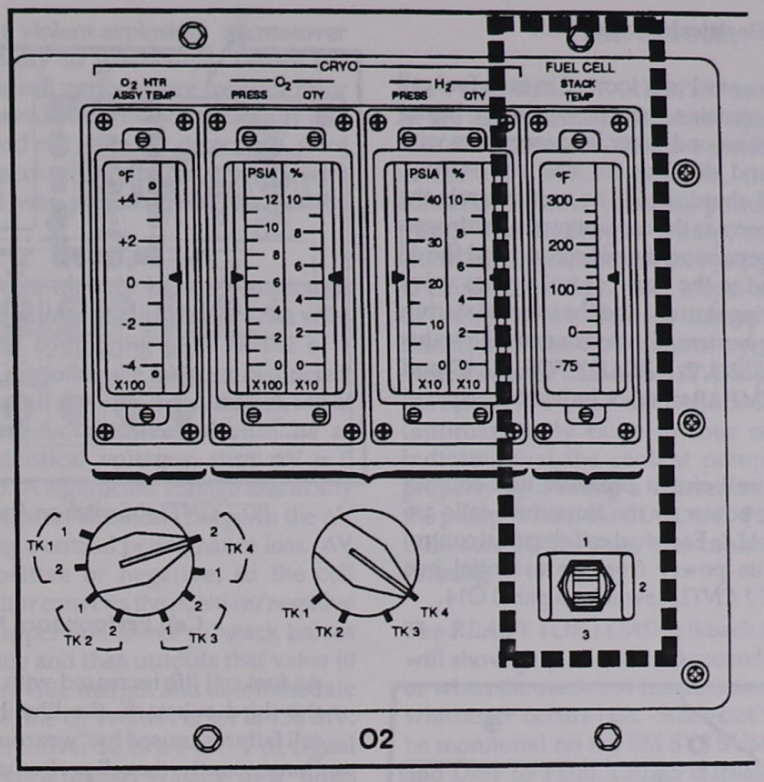

FUEL CELL STACK TEMP Meter and FUEL CELL 1, 2, 3 Switch on Panel O2

will be illuminated if fuel cell and stack temperatures are below 172.5° F or above 243.7° F. The hot coolant from the stack flows through the oxygen and hydrogen preheaters, where it warms the cryogenic reactants before they enter the stack.

The coolant pump utilizes three-phase ac power to circulate the coolant through the loop. The differential pressure sensor senses a pressure differential across the pump to determine the status of the pump. The *FUEL CELL PUMP* light on panel F7 will be illuminated if fuel cell 1, 2, or 3 coolant pump delta pressure is lost. The *SM ALERT* light also will be illuminated, and a fault message will be sent to the CRT. If the coolant pump for fuel cell 1, 2, or 3 is off, the *BACKUP C/W ALARM* light will be illuminated, and a fault message will be sent to the CRT.

The temperature-actuated flow control valve downstream from the pump adjusts the coolant flow to maintain the fuel cell coolant exit temperature between 190° and 210° F. The stack inlet control valve and flow control valve have bypass orifices to allow coolant flow through the coolant pump and to maintain some coolant flow through the condenser for water condensation, even when the valves are fully closed due to the requirements of thermal conditioning. The coolant that does not bypass exits the fuel cells to the fuel cell heat exchanger, where it transfers its excess heat to be dissipated through the ECLSS Freon coolant loop systems in the midfuselage.

Electrical Control Unit

The electrical control unit located in each fuel cell power plant contains the startup logic, heater thermostats, 30-second timer, and interfaces with the controls and displays for fuel cell startup, operation, and shutdown. The unit controls the supply of ac power to the coolant pump, hydrogen pump/water separator, the pH sensor, and the dc power supplied to the flow control bypass valve (open only during startup) and the internal startup and sustaining heaters. It also controls the status of the *FUEL CELL 1, 2, 3 READY FOR LOAD* and *COOLANT PUMP ΔP* talkback indicators on panel R1.

The nine fuel cell circuit breakers that connect three-phase ac power to the three fuel cells are located on panel L4. Each fuel cell electrical control unit receives its power from an essential bus through the *FC 1 CNTLR* switch on panel O14.

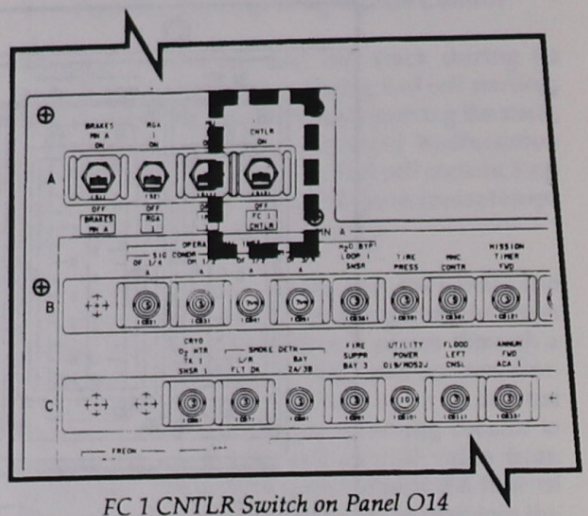

FC 1 CNTLR Switch on Panel O14

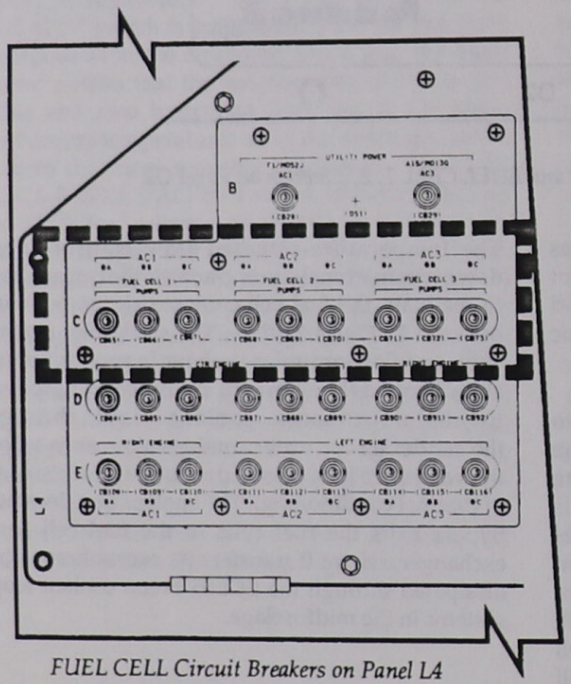

FUEL CELL Circuit Breakers on Panel L4

Cell Performance Monitor

As fuel cell life increased with the introduction of the third substack, the likelihood of individual cell failures caused by "wearout" or age increased. Consequently, the cell performance monitor (CPM) was designed to detect individual cell performance problems or imminent failures such as cell crossover.

Crossover is defined as an uncontrolled mixing of the reactants that results in the generation of excessive product heat. The combination of hydrogen and oxygen represents a mixture that requires little heat to explode. During normal fuel cell operation, hydrogen and oxygen are diffusely mixed to produce electricity. The matrix, a fibrous asbestos blotter device within each cell, allows this mixing to occur and hold the KOH electrolyte. A crossover occurs when the matrix fails to do its job. A manufacturing flaw in the matrix or an impurity in the matrix fibers may cause a pin hole to develop after hours and hours of exposure to the caustic KOH in the presence of the waste heat within the cell.

As the direct combination of the reactant molecules occurs at the pin hole, increased waste heat may cause the pin hole to burn and enlarge allowing more reactants to combine. If this reaction continues, it might uncontrollably propagate, and

possibly result in a violent explosion. A crossover may proceed rapidly or gradually. Before the introduction of the cell performance monitor prior to STS-9, the electrical performance indicators of a crossover-distressed cell were not detectable, since the lost electrical performance of the substack with the degraded cell was picked up by the healthy substacks.

The cell performance monitor basically compares each half substack voltage and extracts a delta volts measurement. By comparing both halves of a substack, the cell performance monitor can detect cell changes. Since all the cells in a substack are at the same current, both halves should be at approximately identical voltages, thus $\Delta V = 0$ (actually ± 50 mV). A significant voltage loss in any one cell will produce an identical change in the ΔV with 300 mV being a critical performance loss. ΔV can be either positive or negative, so the cell performance monitor converts the positive/negative ΔV between the upper and lower substack halves to an absolute value and then outputs that value (0 to 500 mV). To provide margin and accommodate the absolute value, the C/W limit is set at 150 mV. The output is then converted to a 0 to 5 V dc signal for telemetry and crew display systems by a "times 10" amplifier. Calibration curves rescale this to electronic units (EU) (0 to 50 mV).

Every 7.5 minutes the cell performance monitor performs a self-test to ensure data accuracy and to prevent fuel cell shutdown due to faulty data. During the self-test period:

- The voltage measurement of the substack halves ceases.
- A test signal of 50 mV is input to the voltage measurement logic.
- The output of the "times 10" amplifier is examined for 425 to 575 mV.
- If the test fails, the output voltage is driven to 5 volts until the next self-test is performed 7 ± 1 minute later. A test voltage of 50 mV is introduced and the sequence repeats itself.
- If the self-test is passed, the unit resumes substack half voltage measurements.

Fuel Cell Start

The *FUEL CELL START/STOP* switches on panel R1 are used to initiate the start sequence or stop the fuel cell operation. When a switch is held in its momentary *START* position, the control unit connects the three-phase ac power to the coolant pump and hydrogen pump/water separator (allowing the coolant and the hydrogen-water vapor to circulate through these loops) and connects the dc power to the internal startup and sustaining heaters and the flow control bypass valve. The switch must be held in the *START* position until the *COOLANT PUMP ΔP* talkback shows gray (approximately three to four seconds), which indicates that the coolant pump is functioning properly by creating a differential pressure across the pump. When the *COOLANT PUMP ΔP* talkback indicates barberpole, the coolant pump is not running.

The *READY FOR LOAD* talkback for each fuel cell will show gray after the 30-second timer times out, or when the stack-out temperature is above 187° F, whichever occurs last. Stack-out temperature can be monitored on the SM SYS SUMM 1 (STACK T) and DISP 69 FUEL CELLS displays (STACK T). It can also be monitored on the FUEL CELL STACK OUT TEMP meter on panel O2, using the switch

XXXX/XXX/078 SM SYS SUMM 1 XX X DDD/HH:MM:SS
BFS DDD/HH:MM:SS

SMOKE	1/A	2/B		DC VOLTS	1/A	2/B	3/C
CABIN	XX.XS			FC	XX.XS	XX.XS	XX.XS
L/R FD	XX.XS	XX.XS		MAIN	XX.XS	XX.XS	XX.XS
AV BAY 1	XX.XS	XX.XS		CNTL AB	XX.XS	XX.XS	XX.XS
2	XX.XS	XX.XS		BC	XX.XS	XX.XS	XX.XS
3	XX.XS	XX.XS		CA	XX.XS	XX.XS	XX.XS
CABIN				ESS	XX.XS	XX.XS	XX.XS
PRESS	XX.XS			AC			
dP/dT	±.XXS	±.XXS		VOLT ϕ A	XXXS	XXXS	XXXS
BU/EQ	±.XXS			ϕ B	XXXS	XXXS	XXXS
PPO2	X.XXS	X.XXS		ϕ C	XXXS	XXXS	XXXS
FAN ΔP	X.XXS			AMPS ϕ A	XX.XS	XX.XS	XX.XS
HX OUT T	XXXS			ϕ B	XX.XS	XX.XS	XX.XS
O2 FLOW	X.XS	X.XS		ϕ C	XX.XS	XX.XS	XX.XS
N2 FLOW	X.XS	X.XS		FUEL CELL PH	XXS	XXS	XXS
IMU FAN ΔP		X.XXS		AMPS	XXXS	XXXS	XXXS
ΔV FC1	FC2	FC3		REAC VLV	XXS	XXS	XXS
SS1 XXXS	XXXS	XXXS		STACK T	± XXXS	± XXXS	± XXXS
SS2 XXXS	XXXS	XXXS		EXIT T	XXXS	XXXS	XXXS
SS3 XXXS	XXXS	XXXS		COOL P	XXXS	XXXS	XXXS
TOTAL AMPS XXXXS				PUMP	XXS	XXS	XXS
KW XXS							(XX)

SM SYS SUMM 1 (DISP 78)

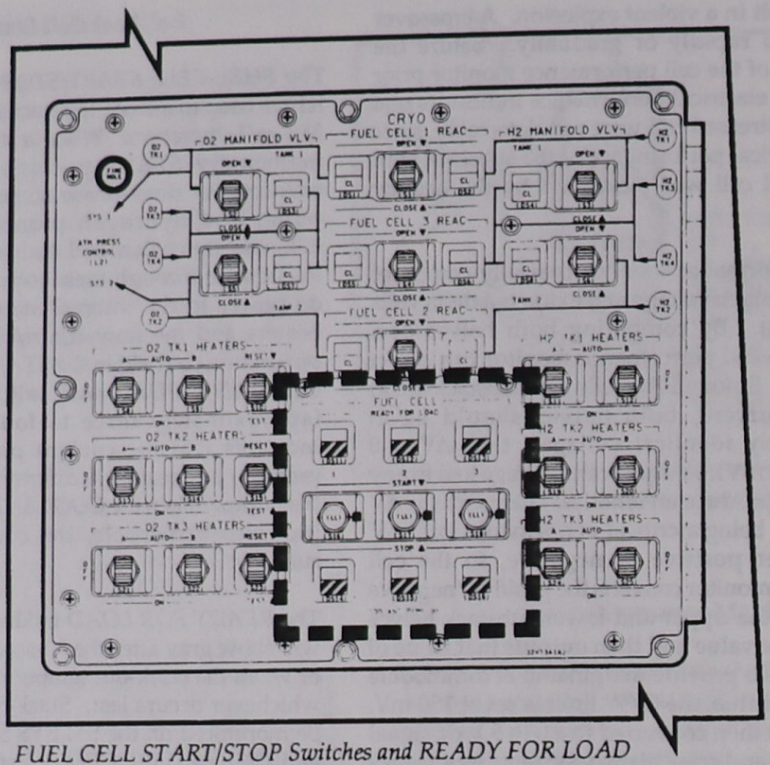

FUEL CELL START/STOP Switches and READY FOR LOAD and COOLANT PUMP ΔP Talkback Indicators on Panel R1

beneath the meter to select the fuel cell. When the *READY FOR LOAD* talkback shows gray, the fuel cell is up to the proper operating temperature and is ready for loads to be attached to it. It should not take longer than 25 minutes for the fuel cell to warm up and become fully operational; the actual time depends on the fuel cell's initial temperature. The *READY FOR LOAD* indicator remains gray until the *FUEL CELL START/STOP* switch for each fuel cell is placed to *STOP*, the *FC 1 CNTLR* switch on panel O14 is placed to *OFF*, or the essential bus power is lost to the electrical control unit.

Electrical Power Distribution and Control

The electrical power distribution and control subsystem controls and distributes ac and dc electrical power to the orbiter subsystems, the solid rocket boosters, the external tank, and payloads. The 28 volts dc generated by each of the three fuel cells is distributed to a main dc bus. The three main dc buses (MN A, MN B, and MN C) are the prime sources of power for the vehicle's dc loads. Each of the three dc main buses supplies power to three solid-state (static), single-phase inverters, each of which powers one three-phase alternating-current bus; thus, the nine inverters convert dc power to 117 +3. -1 volt rms, 400-hertz ac power for distribution to three ac buses (AC 1, AC 2, and AC 3) for the vehicle's ac loads.

Bus System

The three main dc buses are main A (MN A), main B (MN B), and main C (MN C). Three ac buses, AC 1, AC 2, and AC 3, supply ac power to the ac loads. Three essential buses, ESS1BC, ESS2CA, and ESS3AB, supply dc power to selected flight crew controls and electrical loads that are deemed essential. Nine control buses – CNTL AB 1, 2, 3; CNTL BC 1, 2, 3; and CNTL CA 1, 2, 3 – are used to supply control power to flight crew controls. Two preflight buses, PREFLT 1 and PREFLT 2, are used only during ground operations.

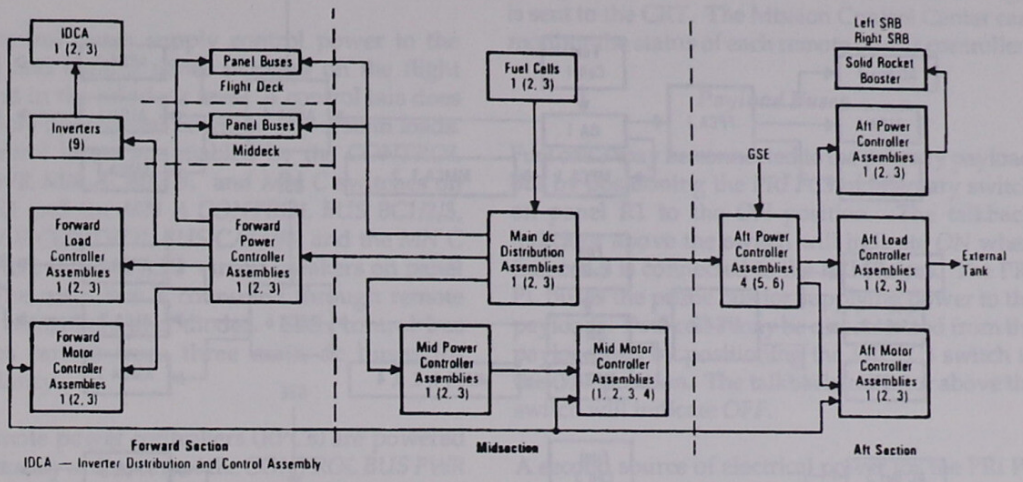

Electrical Power Distribution Block Diagram

Depending on the criticality of orbiter electrical equipment, some electrical loads may receive redundant power from two or three main buses. If an electrical load receives power from two or three sources, it is for redundancy only and not for total power consumption.

DC Power

Main Buses

The main buses distribute dc electrical power from the fuel cells to locations throughout the orbiter. Distribution assemblies handle the routing of main bus power.

Essential Buses

Essential buses supply power to switches that are necessary to restore power to a failed main dc or ac bus and to essential electrical power system electrical loads and switches. In some cases, essential buses are used to power switching discretes to multiplexers/demultiplexers. Examples of the selected flight crew switches and loads are the EPS switches, GPC switches, TACAN, radar altimeter and microwave scan beam landing system power switches, the caution and warning system, emergency lighting, audio control panel, and master timing unit.

Three essential buses, ESS1BC, ESS2CA, and ESS3AB receive power from three redundant sources. For example, ESS1BC receives dc power from fuel cell 1 through the *ESS BUS SOURCE FC 1* switch via a fuse on panel R1 when the switch is positioned to *ON*, and from main dc buses B and C through remote power controllers when the *ESS BUS SOURCE MN B/C* switch on panel R1 is positioned to *ON*. Electrical power is then distributed from the essential bus in distribution assembly 1 through fuses to the corresponding controller assemblies and to the flight and middeck panels.

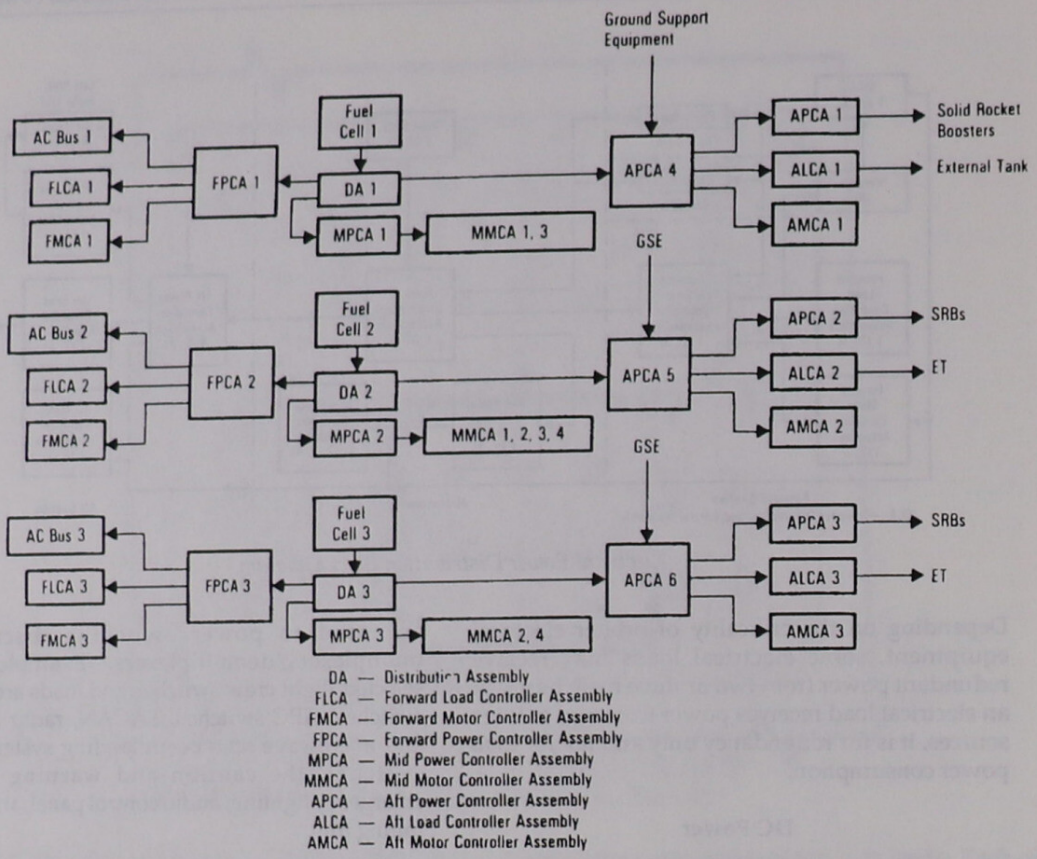

Direct Current Power Distribution Diagram

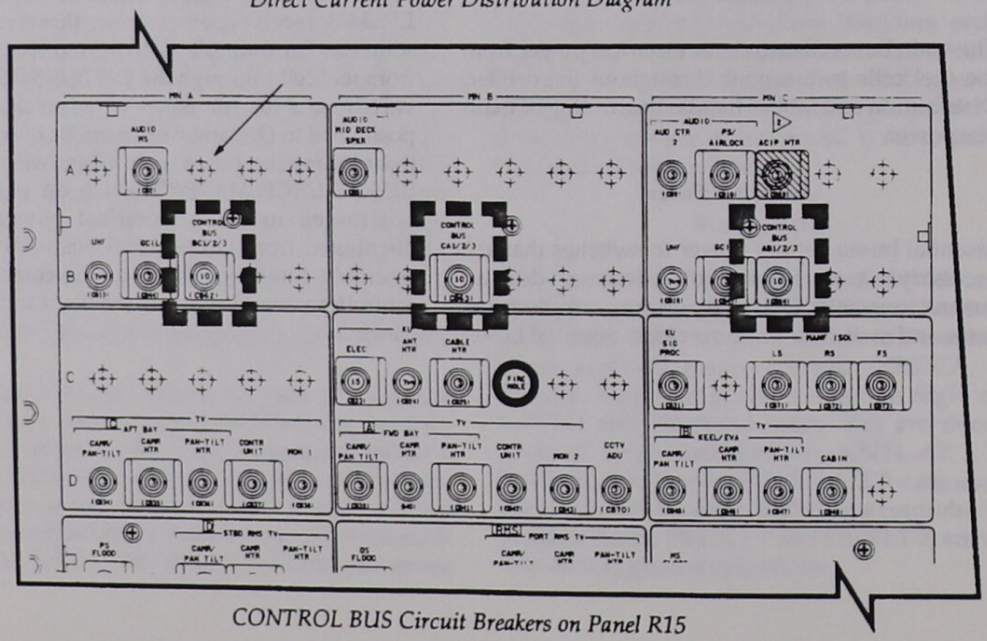

CONTROL BUS Circuit Breakers on Panel R15

Control Buses

Nine control buses supply control power to the display and control panel switches on the flight deck and in the middeck area. A control bus does not supply operational power to any system loads. The control buses are enabled by the *CONTROL BUS PWR MN A, MN B,* and *MN C* switches on panel R1 and the *MN A CONTROL BUS BC1/2/3*, the *MN B CONTROL BUS CA1/2/3*, and the *MN C CONTROL BUS AB1/2/3* circuit breakers on panel R15. The main bus is connected through remote power controllers and diodes. Each control bus receives power from three main dc buses for redundancy.

The remote power controllers (RPCs) are powered continuously unless one of the *CONTROL BUS PWR MN A, MN B, MN C* momentary switches on panel R1 is positioned to the *RESET* position, which turns the corresponding remote power controller's power off and resets the RPC if it has been tripped off. An *SM ALERT* light is illuminated if the control bus voltage is less than 24.5 volts dc, and a fault message is sent to the CRT. The Mission Control Center can monitor the status of each remote power controller.

Payload Buses

Fuel cell 3 may be connected to the primary payload bus by positioning the *PRI FC3* momentary switch on panel R1 to the *ON* position. The talkback indicator above the switch will indicate *ON* when fuel cell 3 is connected to the PRI PL bus. The PRI PL bus is the prime bus for supplying power to the payloads. Fuel cell 3 may be disconnected from the payload bus by positioning the *PRI FC3* switch to the *OFF* position. The talkback indicator above the switch will indicate *OFF*.

A second source of electrical power for the PRI PL bus may be supplied from the MN B bus by positioning the *PRI MN B* momentary switch on panel R1 to the *ON* position. The talkback indicator above this switch will indicate *ON*. The MN B bus may be removed from the PRI PL bus by positioning the switch momentarily to *OFF*. The talkback indicator will indicate *OFF*. A third possible source of electrical power for the PRI PL bus may be supplied from the MN C bus through the *PRI MN C* switch on panel R1, positioned momentarily to the *ON* position. The talkback indicator will indicate *ON*. The MN C bus may be removed from the PRI PL bus by positioning the switch momentarily to *OFF*. The talkback indicator will indicate *OFF*.

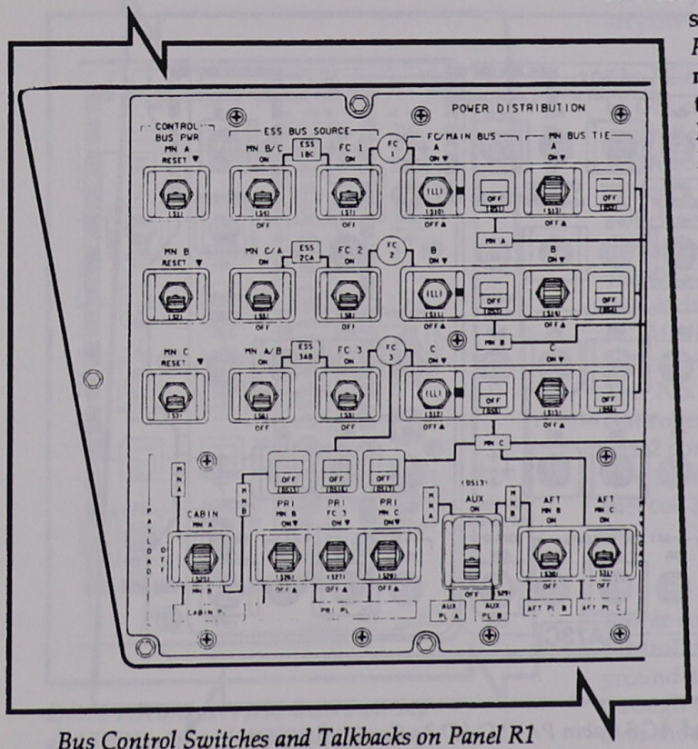

Bus Control Switches and Talkbacks on Panel R1

NOTE

Main buses B and C can be tied via the PRI PL bus. This is referred to as a "backdoor bus tie."

Two additional payload buses are located in the aft section of the payload bay at the aft bulkhead station. The aft payload B bus may be powered up by positioning the *AFT MN B* switch on panel R1 to *ON*. The aft payload C bus may be powered up by positioning the *AFT MN C* switch on panel R1 to *ON*. The *OFF* position of each switch removes power from the corresponding aft payload bus.

The *AUX* switch on panel R1 permits main bus A and main bus B power to be supplied to the AUX PL A and AUX PL B buses when the switch is positioned to *ON*. The auxiliary payload buses provide power for emergency equipment or controls associated with payloads. The *OFF* position removes power from the AUX PL A and PL B buses. The two auxiliary payload buses may be dioded together to form one bus for redundancy.

The *CABIN* switch on panel R1 provides MN A or MN B power to patch panels located behind the payload specialist and mission specialist stations on the aft flight deck. These patch panels supply power to the payload-related equipment located on panels at these stations. Two three-phase circuit breakers, *AC 2 PAYLOAD 3ϕ* and *AC 3 PAYLOAD 3ϕ* on panel MA73C, provide ac power to the payload patch panels.

AC Power Generation

Alternating-current power is generated and made available to system loads by the electrical power distribution and control subsystem using three independent ac buses, AC 1, AC 2, and AC 3. The ac power system includes the ac inverters for dc conversion to ac and inverter distribution and control assemblies containing the ac buses and the ac bus sensors. The ac power is distributed from the inverter distribution and controller assemblies to the flight and middeck display and control panels and from the motor controller assemblies to the three-phase motor loads.

Each ac bus consists of three separate phases connected in a three-phase array. Static inverters, one for each phase, are located in the forward avionics bays. Each inverter has an output voltage of 116 to 120 volts rms at 400 hertz, ± 7 hertz.

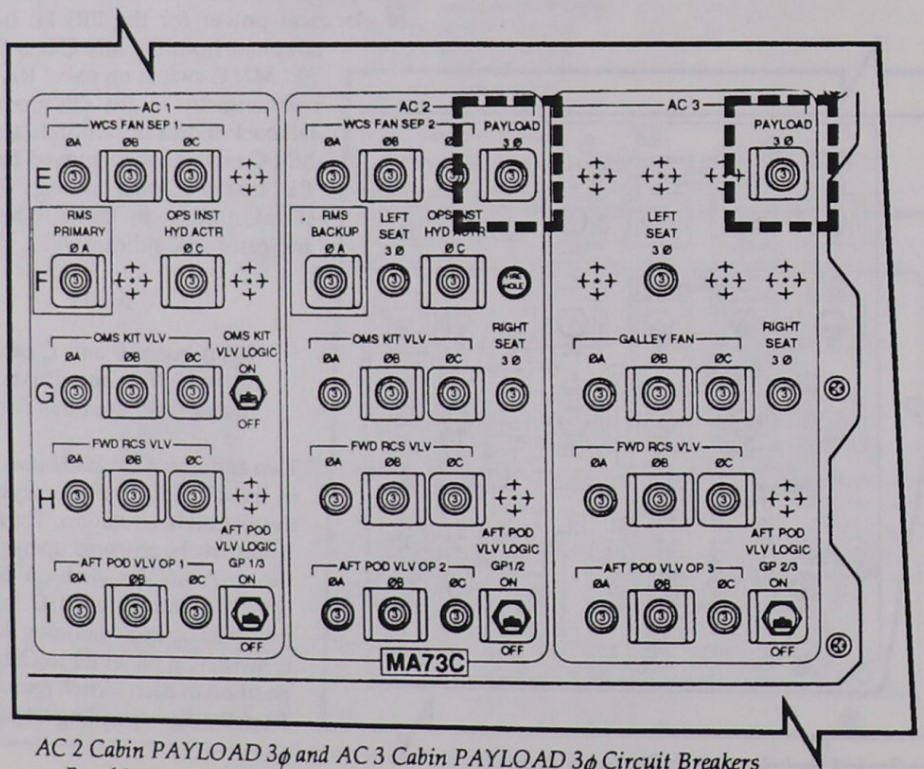

AC 2 Cabin PAYLOAD 3ϕ and AC 3 Cabin PAYLOAD 3ϕ Circuit Breakers on Panel MA73C

Input power to the inverters is controlled by the *INV PWR 1, 2, 3* switches on panel R1. *INV PWR 1* routes power to AC 1 from MN A, *INV PWR 2* to AC 2 from MN B, and *INV PWR 3* to AC 3 from MN C. All three inverters of AC 1 receive MN A bus power when the *INV PWR 1* switch is positioned to *ON*, and all three must be in operation before the talkbacks above the switches indicate *ON*. The indicators will show *OFF* when main bus power is not connected to the inverters.

The *INV/AC BUS 1, 2, 3* switches on panel R1 are used to apply each inverter's output to its respective ac bus. An indicator above each switch shows its status, and all three inverters must be connected to their respective ac buses before the indicators show *ON*. The talkback indicators will show *OFF* when any of the phases are not connected to their respective ac bus.

The *INV PWR* and *INV/AC BUS* switches and talkbacks must have control power from the *AC CONTR* circuit breakers on panel R1 in order to operate. Once ac power has been established, these circuit breakers are opened to prevent any inadvertent disconnection, whether by switch failure or accidental movement of the *INV PWR* or *INV/AC BUS* switches.

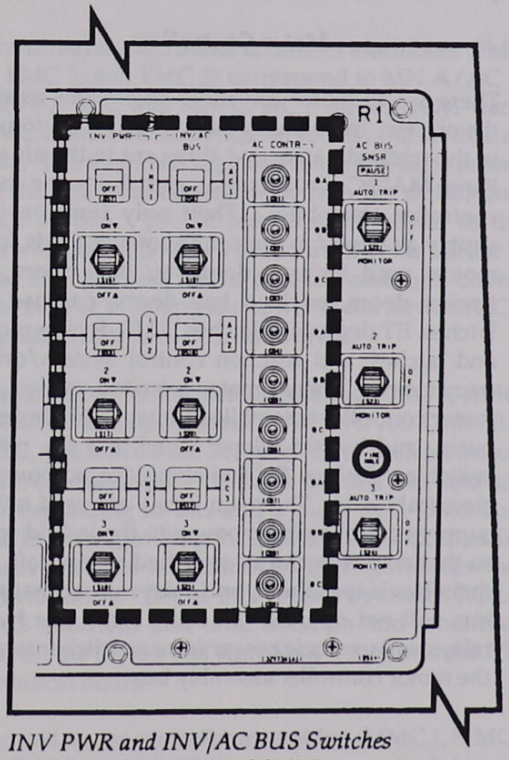

INV PWR and INV/AC BUS Switches and Talkbacks, and AC CONTR Circuit Breakers on Panel R1

Electrical Power Distribution and Control Assemblies

Electrical power is controlled and distributed by assemblies. Each assembly (main distribution assembly, power controller assembly, load controller assembly, and motor controller assembly) is in an electrical equipment container.

Distribution Assemblies

The dc power generated by each of the fuel cells is supplied to a corresponding distribution assembly (DA). Fuel cell 1 powers DA 1, fuel cell 2 powers DA 2, and fuel cell 3 powers DA 3. Each distribution assembly contains remotely controlled motor-driven switches called power contactors used for loads larger than 125 amps. The power contactors are rated at 500 amps. They control and distribute dc power to a corresponding mid power controller assembly, forward power controller assembly, and aft power controller assembly.

The *FC MAIN BUS A* switch on panel R1 positioned to *ON* connects fuel cell 1 to the MN A DA and controllers and disconnects fuel cell 1 from the MN A DA and controllers when positioned to *OFF*. The talkback indicator next to the *FC MAIN BUS A* switch will indicate *ON* when fuel cell 1 is connected to main bus A distribution assembly and controllers, and *OFF* when fuel cell 1 is disconnected from main bus A distribution assembly and controllers. The *FC MAIN BUS B* and *C* switches and talkback indicators on panel R1 function in the same manner. The No. 1 distribution assembly and all No. 1 controllers go with fuel cell 1 and MN A bus, all No. 2 controllers and DA 2 go with fuel cell 2 and MN B, and all No. 3 controllers and DA 3 go with fuel cell 3 and MN C.

Power Controllers

Power contactors are also located in the aft power controller assemblies to control and distribute ground-supplied 28-volt dc power to the orbiter through the T-0 umbilical before the fuel cells take over the supply of orbiter dc power.

Each of the mid, forward, and aft power controller assemblies supplies and distributes dc power to a corresponding motor controller assembly and dc power to the orbiter through the T-0 umbilical before the fuel cells take over the supply of orbiter dc power.

Each of the mid, forward, and aft power controller assemblies supplies and distributes dc power to a corresponding motor controller assembly and dc power to activate the corresponding ac power system.

Remote Power Controllers

Each power controller assembly contains remote power controllers and relays. The remote power controllers are solid-state switching devices used for loads requiring current in a range of 3 to 20 amps. The remote power controllers are current protected by internal fuses and also have the capability to limit the output current to a maximum of 150 percent of rated value for 2 to 3 seconds. Within 3 seconds, the remote power controller will trip out, which removes the output current. To restore power to the load, the remote power controller must be reset. This is accomplished by cycling a control switch. If multiple control inputs are required before a remote power controller is turned on, hybrid drivers are usually used as a logic switch, which then drives the control input of the remote power controller.

Load Controllers

Each load controller assembly contains hybrid drivers, which are solid-state switching devices (no mechanical parts) used as logic switches and for low-power electrical loads of less than 5 amps. When the drivers are used as a logic switch, several control inputs are required to turn on a load. Hybrid drivers are also used in the mid power controller assemblies. The hybrid drivers are current protected by internal fuses. Hybrid relays requiring multiple control inputs are used to switch three-phase ac power to motors.

Relays are also used for loads between 20 amps and 135 amps in power controller assemblies and motor controller assemblies.

In the midbody, there are no load controller assemblies; therefore, the mid power controller assemblies contain remote power controllers, relays, and hybrid drivers.

Each motor controller assembly contains main dc buses, ac buses, and hybrid relays that are remotely controlled for the application or removal of ac power to ac motors. The main dc bus is used only to supply control or logic power to the hybrid relays so the ac power can be switched on or off. The hybrid relays permit major electrical power distribution buses to be located close to the major electrical loads, which minimizes use of heavy electrical feeders to and from the pressurized crew compartment display and control panels. This reduces the amount of spacecraft wiring and weight, and permits more flexible electrical load management.

Aft power controller assemblies 4, 5, and 6 were added to accommodate additional electrical loads in the aft section. Assemblies 4, 5, and 6 are powered by fuel cell 1/MN A, fuel cell 2/MN B, and fuel cell 3/MN C respectively.

Motor Controllers

There are 10 motor controller assemblies used on the orbiter: three are in the forward area, four are in the midbody area, and three are in the aft area. Panel MA73C contains the controls for the motor controller assemblies. Their only function is to supply ac power to noncontinuous ac loads for ac motors used for vent doors, air data doors, star tracker doors, payload bay doors, payload bay latches, ET doors and latches, RMS deploy motors and latches, and reaction control system/orbital maneuvering system motor-actuated valves. The motor controller assemblies contain main buses, ac buses, and hybrid relays, which are the remote switching devices for switching the ac power to electrical loads. The main buses are used only to supply control or logic power to the hybrid relays so that ac power can be switched on and off. If a main bus is lost, the hybrid relays using that main bus will not operate. In some cases, the hybrid relays will use logic power from a switch instead of the motor controller assembly bus.

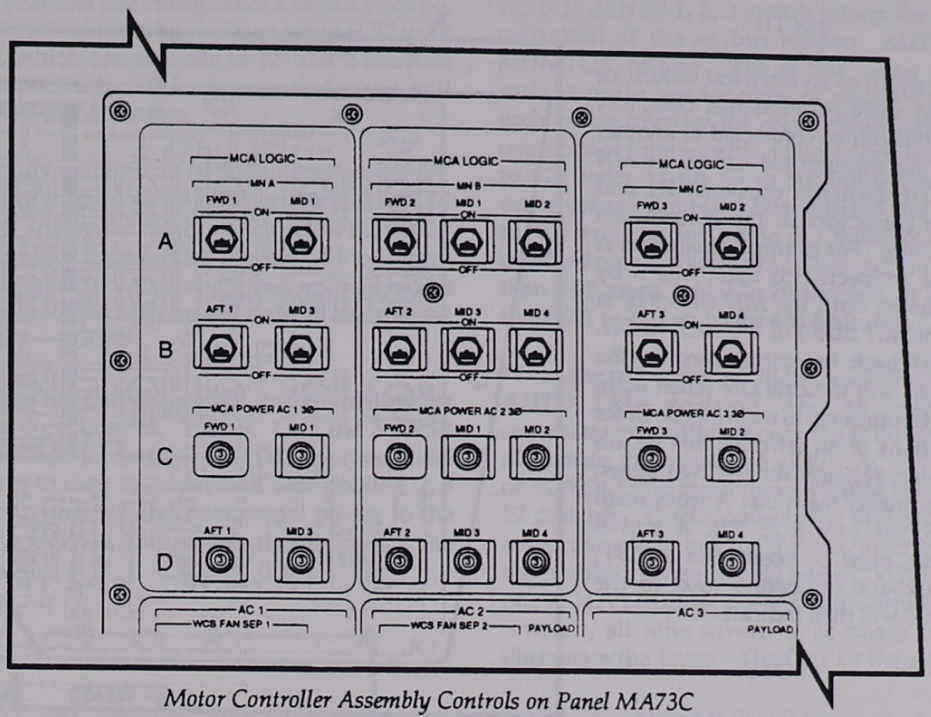

Motor Controller Assembly Controls on Panel MA73C

The three forward motor controller assemblies (FMC 1, FMC 2, and FMC 3) correspond to MN A/AC 1, MN B/AC 2, and MN C/AC 3 respectively. Each FMC contains a main bus, an ac bus, and an RCS ac bus. The main bus supplies control or logic power to the relays associated with both the ac bus and RCS ac bus. The ac bus supplies power to the forward left and right vent doors, the star tracker Y and Z doors, and the air data left and right doors. The RCS ac bus supplies power to the forward RCS manifold and tank isolation valves.

The aft motor controller assemblies (AMC 1, AMC 2, and AMC 3) correspond to MN A/AC 1, MN B/AC 2, and MN C/AC 3 respectively. Each aft motor controller assembly contains a main bus and its corresponding ac bus and a main RCS/OMS bus and its corresponding RCS/OMS ac bus. Both main buses are used for control or logic power for the hybrid relays. The ac bus is used by the aft RCS/OMS manifold and tank isolation and crossfeed valves, the aft left and right vent doors, and the ET umbilical doors.

The mid motor controller assemblies (MMC 1, MMC 2, MMC 3, and MMC 4) contain two main dc buses and two corresponding ac buses. MMC 1 contains main bus A and B and their corresponding buses, AC 1 and AC 2. MMC 2 contains MN B and C and AC 2 and AC 3 buses. MMC 3 contains the same buses as MMC 1, and MMC 4 contains the same buses as MMC 2. Loads for the main buses/ac buses are vent doors, payload bay doors and latches, radiator panel deployment actuator and latches, RMS deploy motors and latches, and payload retention latches.

Component Cooling

The electrical components in the midbody are mounted on cold plates and cooled by the Freon coolant loops. The power controller assemblies, load controller assemblies, motor controller assemblies, and inverters located in forward avionics bays 1, 2, and 3 are mounted on cold plates and cooled by the water coolant loops. The inverter distribution assemblies in forward avionics bays 1, 2, and 3 are air-cooled. The load controller assemblies, power controller assemblies, and motor controller assemblies located in the aft avionics bays are mounted on cold plates and cooled by the Freon system coolant loops.

Bus Tie

In the event of an electrical failure, or to load share between fuel cells, any main bus can be connected to another main bus through the use of the *MN BUS TIE* switches on panel R1 and power contactors in the distribution assemblies. For example, main bus A can be connected to main bus B by positioning both the *MN BUS TIE A* and the *MN BUS TIE B* switch to *ON*. The talkback indicators next to the switches will indicate *ON* when main bus A is connected to main bus B. Other indications of an effective bus tie are matching voltages for the two buses. To disconnect main bus A from main bus B, the *MN BUS TIE A* and *B* switches must be positioned to *OFF*; the talkback indicators next to the switches will then indicate *OFF*.

NOTE

It is also possible to tie the main buses B and C together via the *PRI* switches. This is done by connecting each main bus to the primary payload bus.

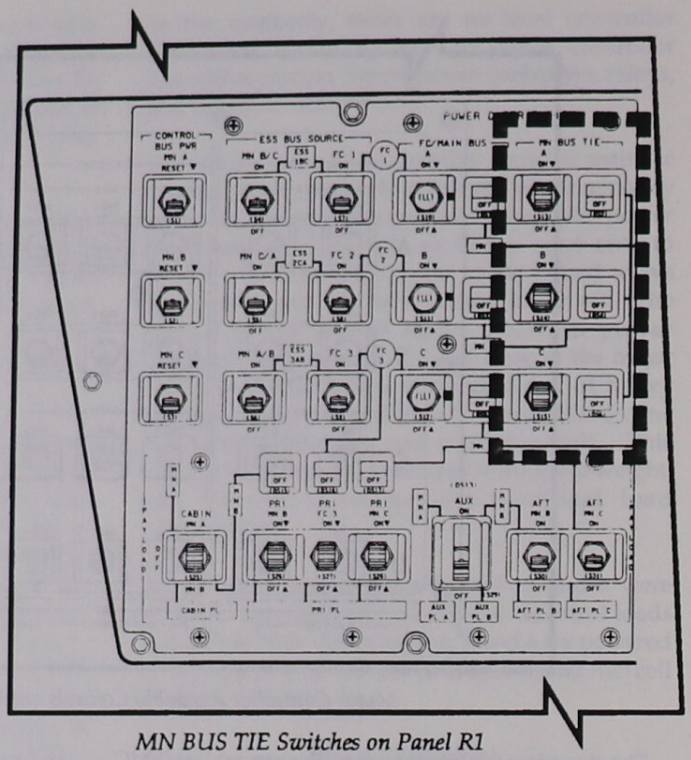

MN BUS TIE Switches on Panel R1

Instrumentation and System Monitoring

Main bus A, B, or C voltages can be displayed on the DC VOLTS meter on panel F9 by selecting *MAIN VOLTS A, B,* or *C* on the rotary switch beneath the meter. The *MAIN BUS UNDERVOLT* red caution and warning light on panel F7 will be illuminated if main bus A, B, or C voltage is 26.4 volts dc, informing the crew that the minimum equipment operating voltage limit of 24 volts dc is being approached. A *BACKUP C/W ALARM* light will also be illuminated at 26.4 volts dc. An *SM ALERT* light will be illuminated at 27 volts dc or less, alerting the flight crew to the possibility of a future low-voltage problem. A fault message also is transmitted to the CRT.

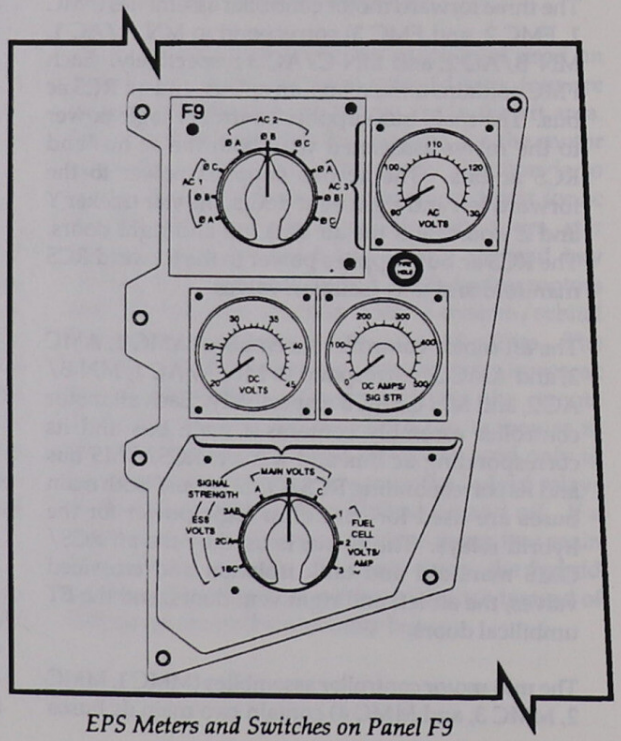

EPS Meters and Switches on Panel F9

The nominal fuel cell voltage is 27.5 to 32.5 volts dc, and the nominal main bus voltage range is 27 to 32 volts dc, which corresponds to 12- and 2-kilowatt loads respectively. If buses are tied, they will indicate the same voltage.

The ESS bus voltage can be monitored on the DC VOLTS meter on panel F9 by selecting *ESS VOLTS 1BC, 2CA, 3AB* on the rotary switch below the meter. An *SM ALERT* light will be illuminated to inform the flight crew if the essential bus voltage is less than 25 volts dc. A fault message also is transmitted to the CRT.

Each ac bus has a sensor, switch, and circuit breaker for flight crew control. The *AC 1, 2,* and *3 SNSR* circuit breakers located on panel O13 apply essential bus power to their respective *AC BUS SNSR 1, 2, 3* switch on panel R1 and operational power to the respective *INV/AC BUS* switch and indicator. The *AC BUS SENSR 1, 2, 3* switch selects the mode of operation of the ac bus sensor: *AUTO TRIP, MONITOR,* or *OFF*. The ac bus sensor monitors each ac phase bus for over- or undervoltage, and each phase inverter for an overload signal. The overvoltage limits are bus voltages greater than 123 to 127 volts ac for 50 to 90 milliseconds. The undervoltage limits are bus voltages less than 102 to 108 volts ac for 6.5 to 8.5 milliseconds. An overload occurs when any ac phase current is greater than 14.5 amps for 10 to 20 seconds, or is greater than 17.3 to 21.1 amps for 4 to 6 seconds.

When the respective *AC BUS SNSR* switch is in the *AUTO TRIP* position, and an overload or overvoltage condition occurs, the ac bus sensor will illuminate the respective yellow *AC OVERLOAD* or *AC VOLTAGE* caution and warning light on panel F7 and trip off (disconnect) the inverter from its respective phase bus for the bus/inverter causing the problem. There is only one *AC VOLTAGE* and one *AC OVERLOAD* caution and warning light; as a result, all nine inverters/ac phase buses can illuminate the lights. The CRT or the AC VOLTS

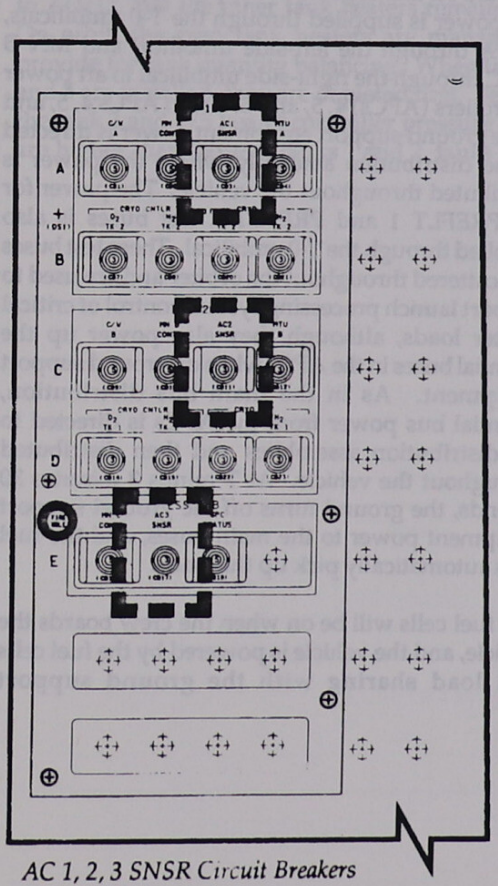

AC 1, 2, 3 SNSR Circuit Breakers on Panel O13

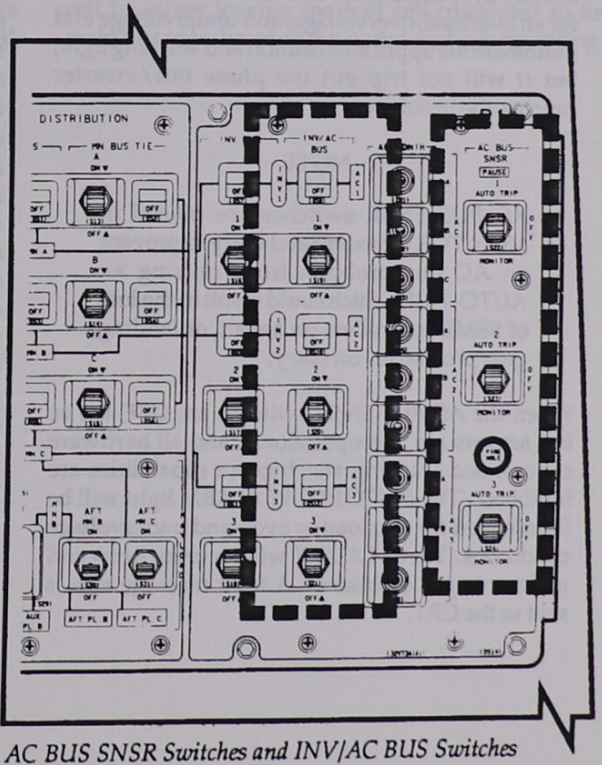

AC BUS SNSR Switches and INV/AC BUS Switches and Talkback Indicators on Panel R1

meter and rotary switch beside it on panel F9 would be used to determine which inverter or phase bus caused the light to illuminate. The phase causing the problem would approach 0 amps after the bus sensor disconnects the inverter from the bus. Because of the various three-phase motors throughout the vehicle, there will be an induced voltage on the disconnected phase if only one phase has loss of power.

Before power can be restored to the tripped bus, the trip signal to the *INV/AC BUS* switch must be removed by positioning the *AC BUS SNSR* switch to *OFF*, then back to the *AUTO TRIP* position, which extinguishes the caution and warning light. The *INV/AC BUS* switch is then positioned to *ON*, restoring power to the failed bus. If the problem is still present, the sensor trip sequence will be repeated. If an undervoltage exists, the yellow *AC VOLTAGE* caution and warning light on panel F7 will be illuminated, but the inverter will not be tripped out from its phase bus.

When the *AC BUS SENSR 1, 2, 3* switches are in the *MONITOR* position, the ac bus sensor will monitor for an overload, overvoltage, and undervoltage and illuminate the applicable caution and warning light; but it will not trip out the phase bus/inverter causing the problem.

NOTE

AC BUS SNSR switches are placed in *MONITOR* for ascent and entry to prevent an AC bus problem from causing an AUTO-TRIP, which could result in the loss of SSME controllers on ascent, or landing gear prox boxes on entry.

When the *AC BUS SNSR* switches are *OFF*, the ac bus sensors are non-operational, and all hardware caution and warning and trip-out capabilities are inhibited. The *BACKUP C/W ALARM* light will be illuminated for overload or over- and undervoltage conditions. The *SM ALERT* will occur for over- and undervoltage conditions. A fault message also is sent to the CRT.

Operations

Prelaunch

During prelaunch operations, the onboard fuel cell reactants (oxygen and hydrogen) are supplied by ground support equipment to assure a full load of onboard reactants before lift-off. At T minus 2 minutes 35 seconds, the ground support equipment filling operation is terminated. The ground support equipment supplies hydrogen and oxygen to the PRSD manifold at pressures greater than the tank heater control range pressures (approximately 280 psia for hydrogen and 960 psia for oxygen). The ground support equipment supply valves close automatically to transfer to onboard reactants.

Until T minus 3 minutes and 30 seconds, power to the orbiter is load shared with the fuel cells and ground support equipment, even though the fuel cells are on and capable of supplying power. Main bus power is supplied through the T-0 umbilicals, MN A through the left-side umbilical and MN B and C through the right-side umbilical to aft power controllers (APCs) 4, 5, and 6. From APCs 4, 5, and 6, the ground support equipment power is directed to the distribution assembly where the power is distributed throughout the vehicle. The power for the PREFLT 1 and PREFLT 2 test buses is also supplied through the T-0 umbilical. These test buses are scattered throughout the orbiter and are used to support launch processing system control of critical orbiter loads, although they also power up the essential buses in the APCs when on ground support equipment. As in the main bus distribution, essential bus power from the APCs is directed to the distribution assemblies and then distributed throughout the vehicle. At T minus 3 minutes 30 seconds, the ground turns off the ground support equipment power to the main buses, and the fuel cells automatically pick up the loads.

The fuel cells will be on when the crew boards the vehicle, and the vehicle is powered by the fuel cells and load sharing with the ground support

equipment power supplies. Just before lift-off (T minus 3 minutes and 30 seconds), the ground support equipment is powered off and the fuel cells take over the rest of the vehicle's electrical loads. Indication of the switchover can be noted on the CRT display and the DC AMPS meter. The fuel cell current will increase to approximately 220 amps; the oxygen and hydrogen flow will increase to approximately 4.6 and 0.6 pound per hour respectively; and the fuel cell stack temperature will increase slightly. At T minus zero, the T-0 umbilical is disconnected with the preflight test bus wires live.

Prelaunch and On Orbit Tank Heater Management

Before lift-off, the *O2 TK1 HEATERS A*, *O2 TK2 HEATERS A*, *H2 TK1 HEATERS A*, and *H2 TK 2 HEATERS A* switches on panel R1 are set on *AUTO*. After the OMS-1 burn, all the switches are positioned to *AUTO*, and the other tank heaters remain *OFF*. On orbit, the cryo tank heaters are managed to provide for tank quantity balancing. When tanks 4 and 5 are installed, they are depleted first. Because the tank 3 and 4/5 heater controller pressure limits are higher than those of tanks 1 and 2, tanks 3 and 4/5 supply the reactants to the fuel cells when all tank heaters are set to *AUTO*. For entry, tanks 1 and 2 supply the reactants to the fuel cells.

Fuel Cell Operating Modes

Fuel cell standby consists of removing the electrical loads but continuing operation of the fuel cell pumps, controls, instrumentation, and valves, with the electrical power being supplied by the remaining fuel cells. A small amount of reactants is used to generate power for the fuel cell internal heaters. If the temperature in the fuel cell compartment beneath the payload bay is lower than 40° F, the fuel cell should be left in *STANDBY* instead of being shut down to prevent it from freezing.

Fuel cell shutdown, after standby, consists of stopping the coolant pump and hydrogen pump/water separator by positioning that *FUEL CELL START/STOP* switch on panel R1 to the *STOP* position.

Fuel cell safing consists of closing the fuel cell reactant valves and consuming the reactants inside the fuel cell by either leaving the fuel cell connected to its main bus or by keeping the pump package operating.

EPS Caution and Warning Summary

- The *SM ALERT* will illuminate if a current level detector trip-out occurs.
- The yellow *O_2 PRESS* light illuminates if oxygen tank pressure is below 540 psia or above 985 psia.
- The yellow *H_2 PRESS* light illuminates if hydrogen tank pressure is below 153 psia or above 293.8 psia.
- When any fuel cell reactant valve is closed, the red *FUEL CELL REAC* light is illuminated, a tone is sounded, the *BACKUP C/W ALARM* is illuminated, and an *SM ALERT* occurs.
- The yellow *FUEL CELL STACK TEMP* light will illuminate if fuel cell and stack temperatures are below 172.5° F or above 243.7° F. The red *BACKUP C/W ALARM* and blue *SM ALERT* will also light.
- The yellow *FUEL CELL PUMP* and blue *SM ALERT* lights will illuminate if fuel cell 1, 2, or 3 coolant pump delta pressure is lost. If the coolant pump for fuel cell 1, 2, or 3 is off, the *BACKUP C/W ALARM* will be illuminated.
- The yellow *O_2 HEATER TEMP* light on panel F7 illuminates if the temperature sensor senses the oxygen tank temperature is at or above 349° F. Software checks the limit; if it is verified, the *BACKUP C/W ALARM* light illuminates as well.
- The red *MAIN BUS UNDERVOLT* light and the *BACKUP C/W ALARM* illuminate if main bus A, B, or C voltage is 26.4 volts dc.
- The yellow *AC VOLTAGE* light illuminates for an overvoltage or undervoltage condition in the ac bus. The red *BACKUP C/W ALARM* will also illuminate.
- The yellow *AC OVERLOAD* light illuminates for an overload condition in the ac bus.

O_2 PRESS	H_2 PRESS	FUEL CELL REAC (R)	FUEL CELL STACK TEMP	FUEL CELL PUMP
CABIN ATM (R)	O_2 HEATER TEMP	MAIN BUS UNDERVOLT (R)	AC VOLTAGE	AC OVERLOAD
FREON LOOP (R)	AV BAY/ CABIN AIR	IMU	FWD RCS (R)	RCS JET
H_2O LOOP	RGA/ACCEL	AIR DATA (R)	LEFT RCS (R)	RIGHT RCS (R)
———	LEFT RHC (R)	RIGHT/AFT RHC (R)	LEFT OMS (R)	RIGHT OMS (R)
PAYLOAD WARNING (R)	GPC	FCS SATURATION (R)	OMS KIT	OMS TVC (R)
PAYLOAD CAUTION	PRIMARY C/W	FCS CHANNEL	MPS (R)	———
BACKUP C/W ALARM (R)	APU TEMP	APU OVERSPEED	APU UNDERSPEED	HYD PRESS

EPS Caution and Warning Lights on Panel F7

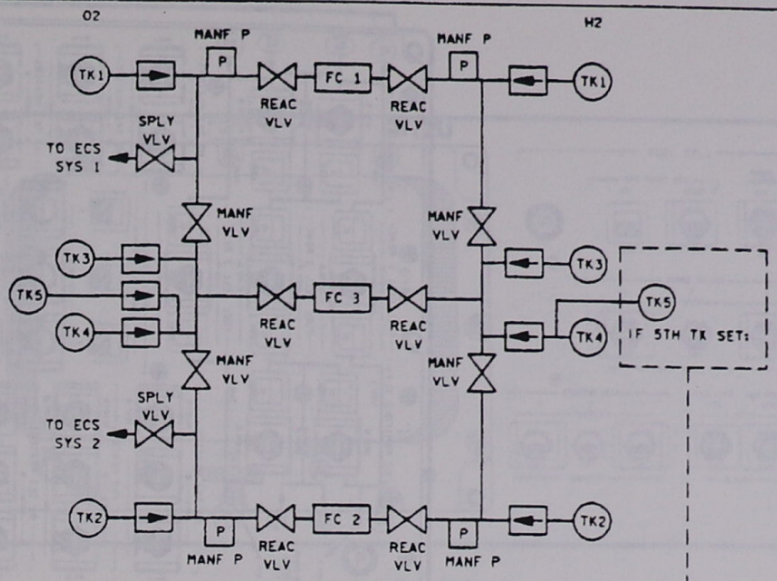

O2/H2 HTR LOSS (3 OR 4 TK SETS)								
BUS LOSS	PAIRED				PAIRED			
	TK1		TK2		TK3		TK4	
	A	B	A	B	A	B	A	B
MNA DA1 MNB DA2 MNC DA3	A/M AUTO	A/M	AUTO A/M	A/M	A/M AUTO	A/M	AUTO A/M	A/M
CNTL AB1 AB2		MAN A/M			MAN A/M			
CNTL BC1 BC2 BC3			MAN A/M	MAN			MAN A/M	MAN
CNTL CA1 CA2 CA3	MAN A/M			A/M		MAN A/M		A/M
ESS 1BC 2CA 3AB	AUTO* AUTO	AUTO* AUTO	AUTO AUTO*	AUTO AUTO*	AUTO* AUTO	AUTO* AUTO	AUTO AUTO*	AUTO AUTO*

* AUTO OPERATION REGAINED IF BOTH A AND B HTR SW OF OTHER PAIRED TANK IS NOT IN AUTO

O2/H2 HTR LOSS (5 TK SETS ONLY)													
BUS LOSS	PAIRED				PAIRED								
	TK1		TK2		TK3		TK4			TK5			
	A	B	A	B	A	B	O2	H2A	H2B	O2	H2A	H2B
MNA DA1 MNB DA2 MNC DA3	A/M AUTO	A/M	AUTO A/M	A/M	A/M AUTO	A/M	AUTO A/M	AUTO A/M	A/M	A/M	AUTO A/M	A/M
CNTL AB1 AB2		MAN A/M			MAN A/M							
CNTL BC1 BC2 BC3			MAN A/M	MAN			MAN A/M	MAN A/M	MAN	MAN	MAN A/M	MAN
CNTL CA1 CA2 CA3	MAN A/M			A/M		MAN A/M			A/M	A/M		A/M
ESS 1BC 2CA 3AB	AUTO* AUTO	AUTO* AUTO	AUTO AUTO*	AUTO AUTO*	AUTO* AUTO	AUTO* AUTO	AUTO AUTO*	AUTO AUTO*	AUTO AUTO*	AUTO AUTO*	AUTO AUTO*	AUTO AUTO*

* AUTO OPERATION REGAINED IF BOTH A AND B HTR SW OF OTHER PAIRED TANKS ARE NOT IN AUTO. TK1 PAIRED WITH TK2, AND TK3 PAIRED WITH TK4/5
A/M = AUTO AND MANUAL LOSS

Cryogenic System

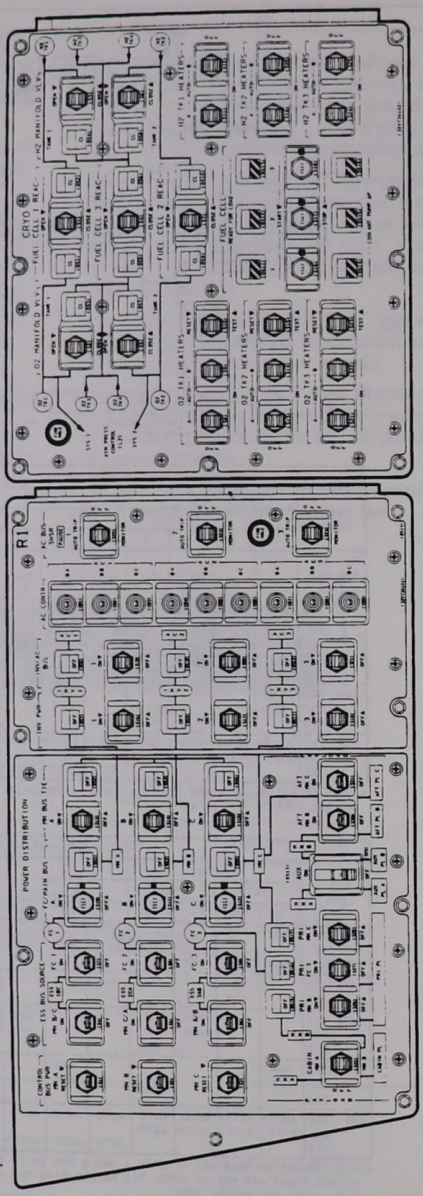

Panel R1

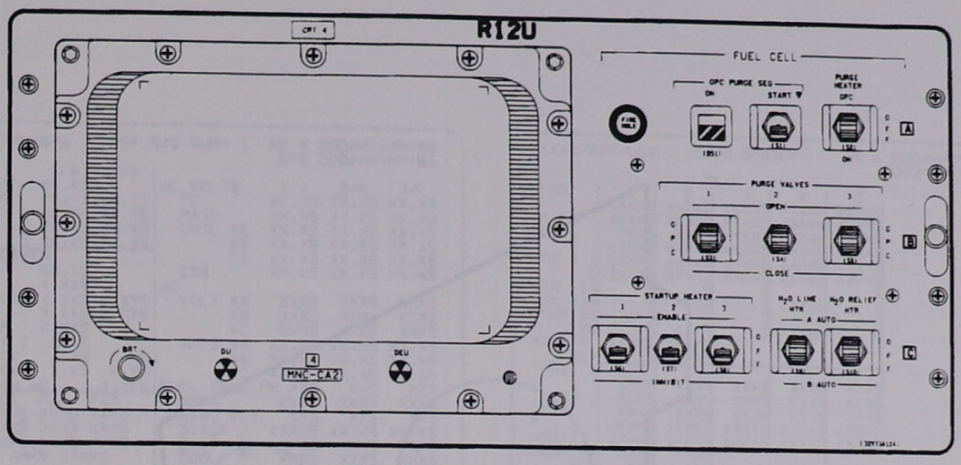

Panel R12U

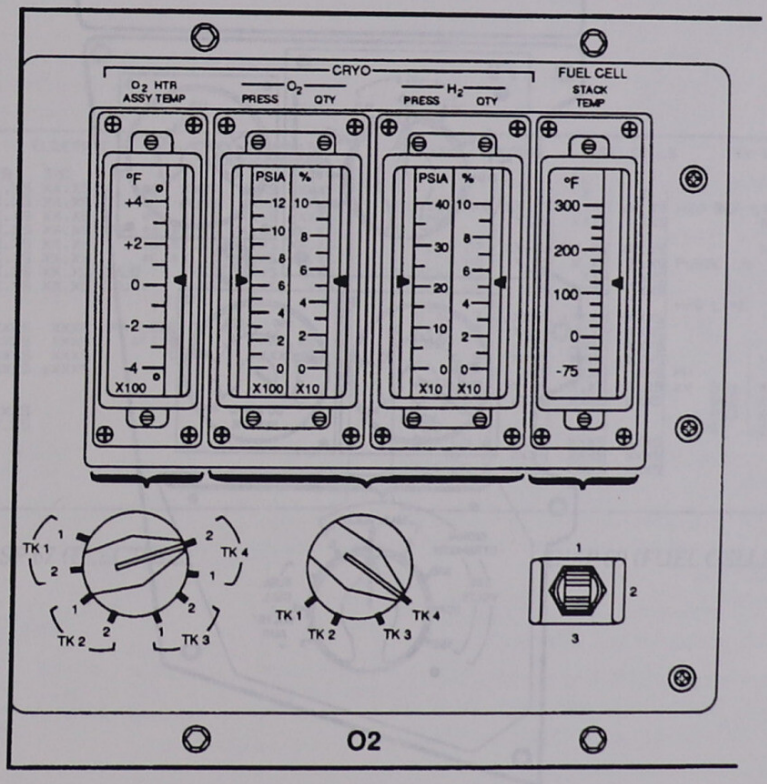

Panel O2

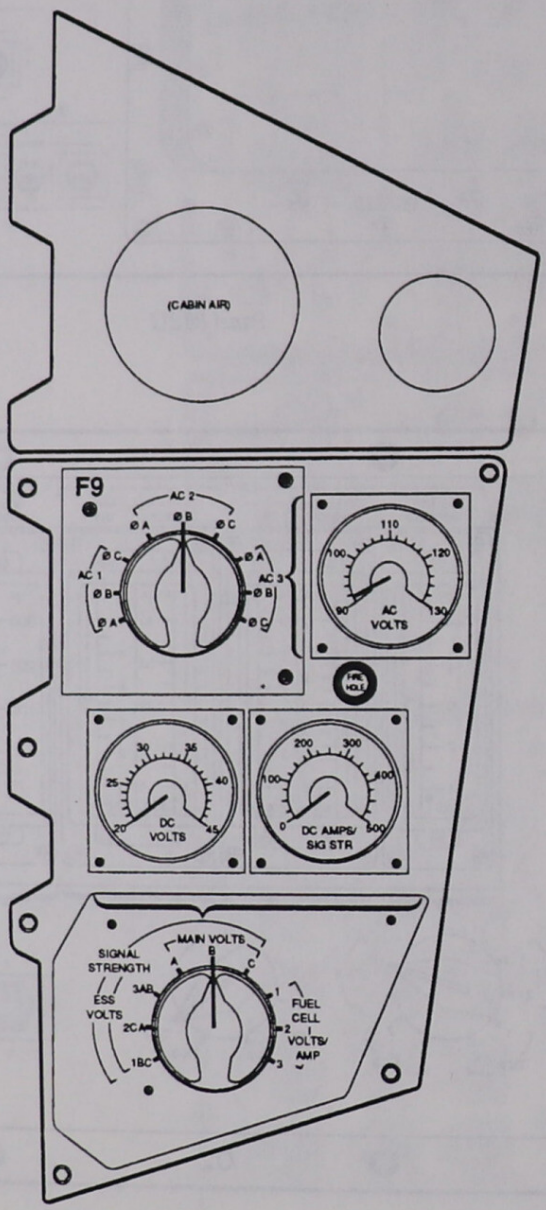
(CABIN AIR)
F9
AC 2
ØA
ØB
ØC
AC 1
AC 3
AC VOLTS
110
100
120
90
130
DC VOLTS
30
35
25
40
20
45
DC AMPS/ SIG STR
200
300
100
400
0
500
MAIN VOLTS
A
B
C
SIGNAL STRENGTH
ESS VOLTS
3AB
2CA
1BC
1
2
3
FUEL CELL VOLTS/ AMP

Panel F9

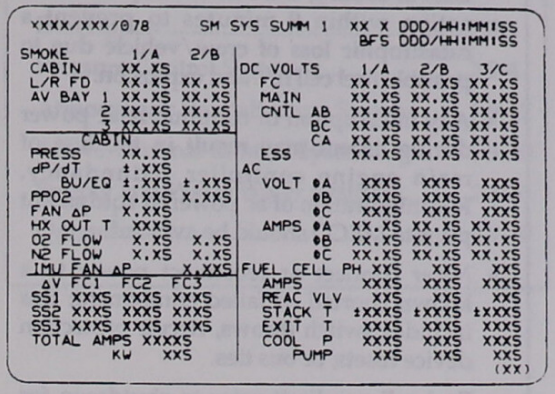

BFS SM SYS SUMM 1

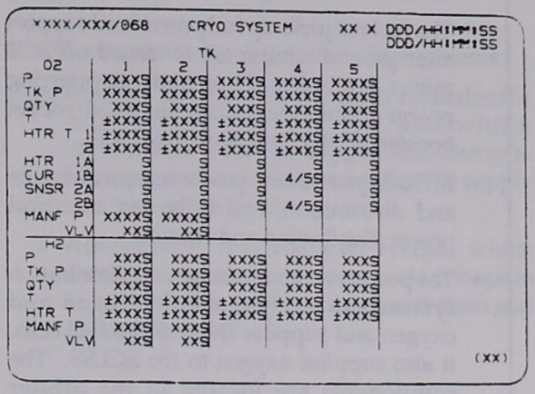

DISP 68 (CRYO SYSTEM)

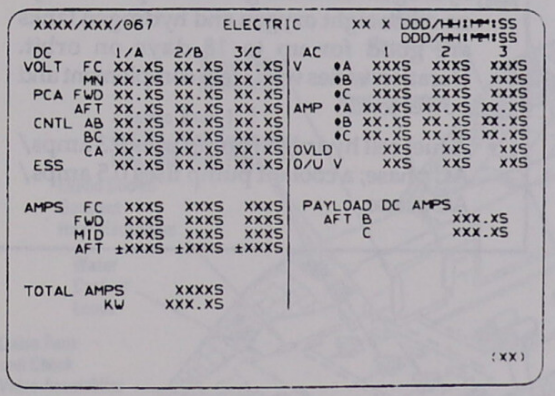

DISP 67 (ELECTRIC)

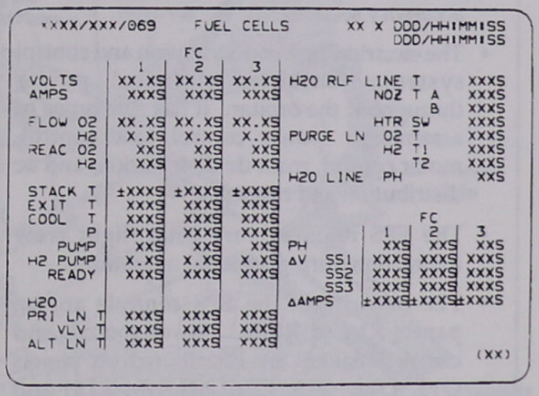

DISP 69 (FUEL CELLS)

EPS Summary Data

- The EPS, which operates during all flight phases, consists of the equipment and reactants that produce electrical power for distribution throughout the orbiter vehicle.
- The fuel cell picks up full power load support after ground equipment is turned off at T minus 3 minutes 30 seconds, supporting power requirements for the solid rocket booster, orbiter, and some payloads.
- EPS subsystems are: power reactants storage and distribution, fuel cells, and electrical power distribution and control.
- The power reactants storage and distribution system stores cryogenic hydrogen and oxygen and supplies them to the fuel cells. It also supplies oxygen to the ECLSS. The components are located in the orbiter midbody underneath the payload bay.
- The fuel cell system (three fuel cells) transforms hydrogen and oxygen to electricity through a chemical reaction. The system also supplies potable water to the ECLSS. It consists of a power and an accessory section.
- The electrical power distribution and control system distributes electrical power throughout the orbiter. It has five types of assemblies: power control, load control, motor control, main dc distribution, and ac distribution and control.
- The EPS requires very little flight crew interaction during nominal operations.
- The majority of the EPS controls are on panels R1 and R12U. Power sources and circuit breakers are distributed on panels O13, O14, O15, O16, ML86B, R15, and MA73C. Heaters are controlled from panel A11.
- Meters for monitoring EPS parameters are located on panels F9 and O2.
- CRTs that display EPS data are BFS SM SYS SUMM 1, DISP 67 (ELECTRIC), DISP 68 (CRYO SYSTEM), and DISP 69 (FUEL CELLS).

EPS Rules of Thumb

- *Never* close a circuit breaker or reset an RPC found out of configuration without MCC coordination.
- Loss of cooling to a fuel cell requires crew action within 9 minutes to prevent a catastrophic loss of crew/vehicle due to possible fuel cell fire and explosion.
- Any interruption of continuous ac power during ascent may result in the loss of main engine controller redundancy. Reconfiguration of ac powered equipment prior to MECO should be avoided.
- *Never* connect or reconnect power to a known shorted or failed component; this includes switch throws, circuit protection device resets, or bus ties.
- Fuel cell run limit prior to shutdown for loss of cooling is 9 minutes at a 7 kW nominal load. Run time varies inversely with fuel cell load.
- Three oxygen and hydrogen tanks are good for up to 8 days on orbit; five oxygen and hydrogen tanks are good for up to 12 days on orbit; eight oxygen and hydrogen tanks are good for up to 18 days on orbit. Duration varies with crew complement and power load.
- A fuel cell hydrogen pump uses 0.3 amps/AC phase; a coolant pump uses 0.5 amps/AC phase.

2.9 ENVIRONMENTAL CONTROL AND LIFE SUPPORT SYSTEM (ECLSS)

CONTENTS

Description 2.9-1
Pressure Control System 2.9-4
Atmospheric Revitalization System 2.9-12
Active Thermal Control System 2.9-20
Supply and Waste Water Systems 2.9-31
Operations 2.9-40

Description

The ECLSS maintains the orbiter's thermal stability and provides a pressurized, habitable environment for the crew and onboard avionics. The ECLSS also manages the storage and disposal of water and crew waste.

ECLSS is functionally divided into four systems:

1. **Pressure control system**, which maintains the crew compartment at 14.7 psia with a breathable mixture of oxygen and nitrogen. Nitrogen is also used to pressurize the supply and waste water tanks.
2. **Atmospheric revitalization system**, which uses air circulation and water coolant loops to remove heat, control humidity, and clean and purify cabin air.

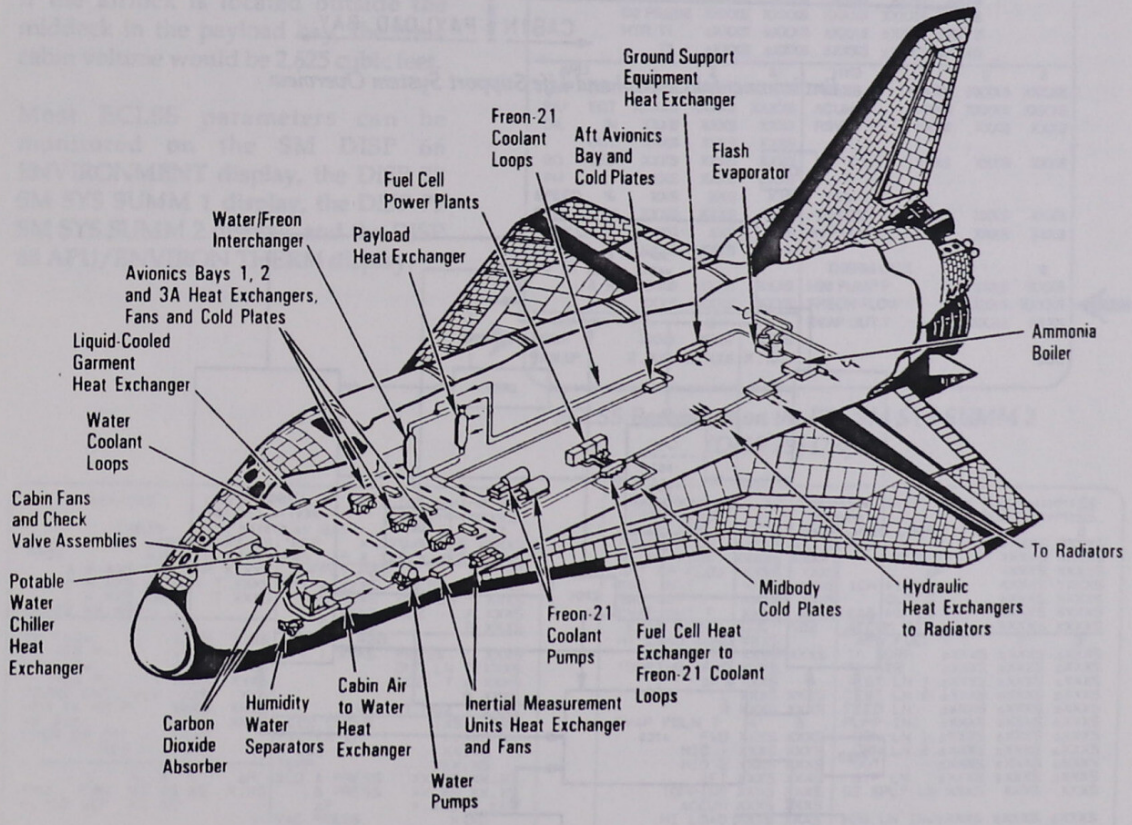

Environmental Control and Life Support System

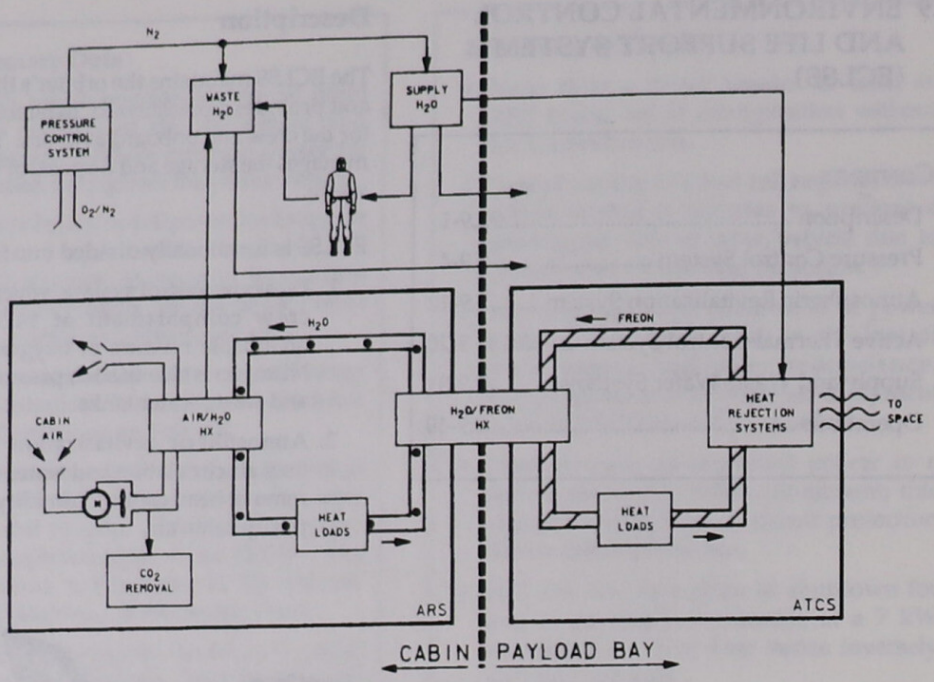

Environmental Control and Life Support System Overview

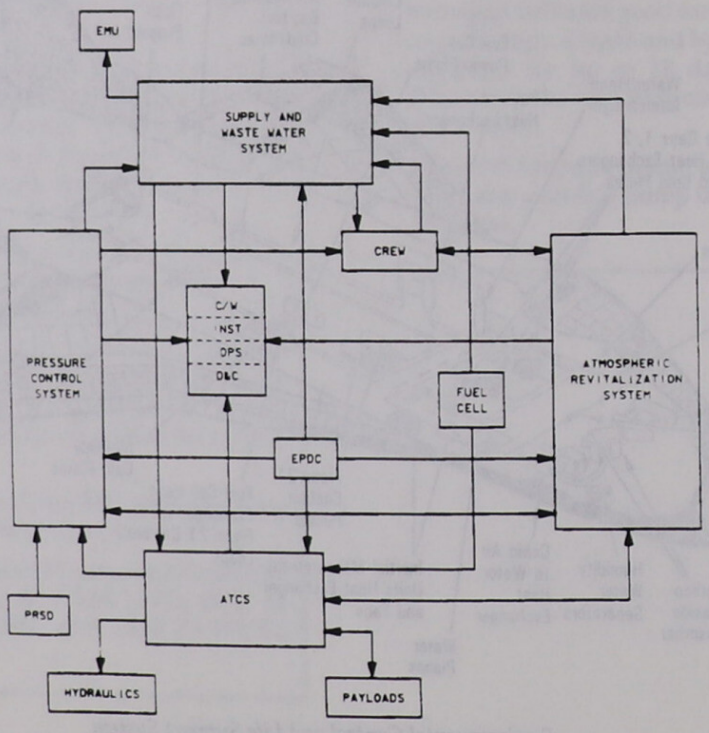

Environmental Control and Life Support System Interfaces

3. **Active thermal control system,** which consists of two Freon loops that collect waste heat from orbiter systems and transfer the heat overboard.

4. **Supply and waste water system.** The supply water system stores water produced by the fuel cells for drinking, personal hygiene, and orbiter cooling. The waste water system stores crew liquid waste and waste water from the humidity separator. The system also has the capability to dump supply and waste water overboard.

The orbiter crew compartment provides a life-sustaining environment for the flight crew. The crew cabin volume with the airlock inside the middeck is 2,325 cubic feet. For EVA, the airlock is depressurized and repressurized. Under some circumstances, the cabin may be depressed to 10.2 psia to ease prebreathe requirements prior to an EVA. If the airlock is located outside the middeck in the payload bay, the crew cabin volume would be 2,625 cubic feet.

Most ECLSS parameters can be monitored on the SM DISP 66 ENVIRONMENT display, the DISP 78 SM SYS SUMM 1 display, the DISP 79 SM SYS SUMM 2 display, and the DISP 88 APU/ENVIRON THERM display.

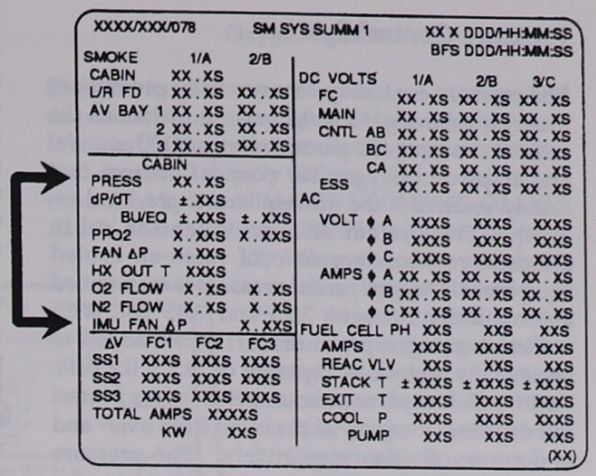

ECLSS Parameters on the SM SYS SUMM 1 (DISP 78) Display

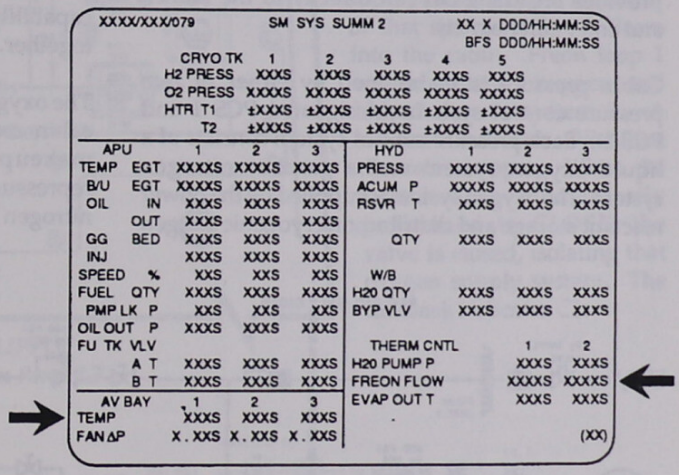

ECLSS Parameters on the BFS SM SYS SUMM 2 (DISP 79) Display

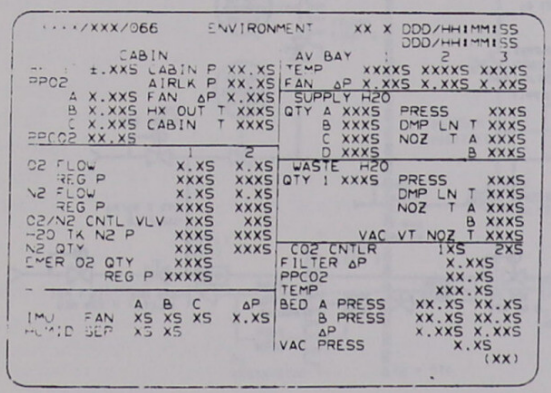

ENVIRONMENT Display (DISP 66)

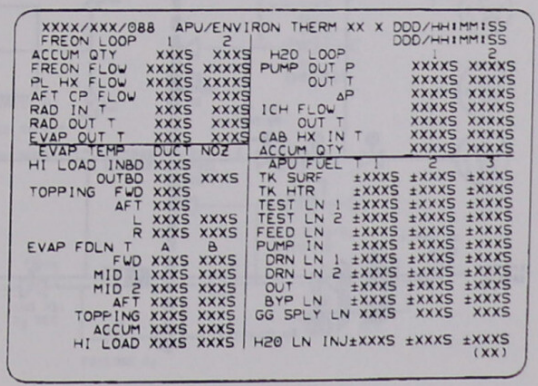

APU/ENVIRON THERM Display (DISP 88)

Pressure Control System

The pressure control system normally pressurizes the crew cabin to 14.7 ± 0.2 psia. It maintains the cabin at an average 80-percent nitrogen (130 pounds) and 20-percent oxygen (40 pounds) mixture that closely resembles the atmosphere at sea level on Earth. The system also provides the cabin atmosphere necessary to cool cabin-air-cooled equipment. Oxygen partial pressure is maintained automatically between 2.95 and 3.45 psi, with sufficient nitrogen pressure of 11.5 psia added to achieve the cabin total pressure of 14.7 ± 0.2 psia. Positive and negative pressure relief valves protect the structural integrity of the cabin from over- and underpressurization respectively. The pressure control system nitrogen is used to pressurize the supply and waste water tanks. The system also provides breathing oxygen directly to the launch and entry suit helmets.

Cabin pressure is maintained by either of two pressure control systems (designated PCS 1 and PCS 2). Each pressure control system consists of a liquid oxygen system and a gaseous nitrogen system. The oxygen system is supplied by the power reactant storage and distribution cryogenic oxygen systems in the midfuselage of the orbiter. The cryogenic supercritical oxygen storage system is controlled by electrical heaters within the tanks and supplies oxygen to the ECLSS pressure control system at a pressure of 803 to 882 psia in a gaseous state. The nitrogen storage tanks are serviced to a nominal pressure of 2,964 psia at 80° F. Normal on-orbit operations use one oxygen and one nitrogen supply system.

Cabin pressure is controlled by the nitrogen/oxygen control and supply panels, the PPO_2 sensor, and pressure relief valves. The nitrogen/oxygen control panel selects and regulates primary (pressure control system 1) or secondary (pressure control system 2) oxygen and nitrogen. The system 1 and system 2 nitrogen/oxygen supply panels are located in the lower forward portion of the midfuselage. The system 1 and 2 supply systems have a crossover capability, which allows the systems to be tied together.

The oxygen supply system provides the "makeup" cabin oxygen gas for flight crew consumption, makeup for cabin leakage, and airlock repressurization. The nitrogen system provides nitrogen for pressurizing the cabin and the potable

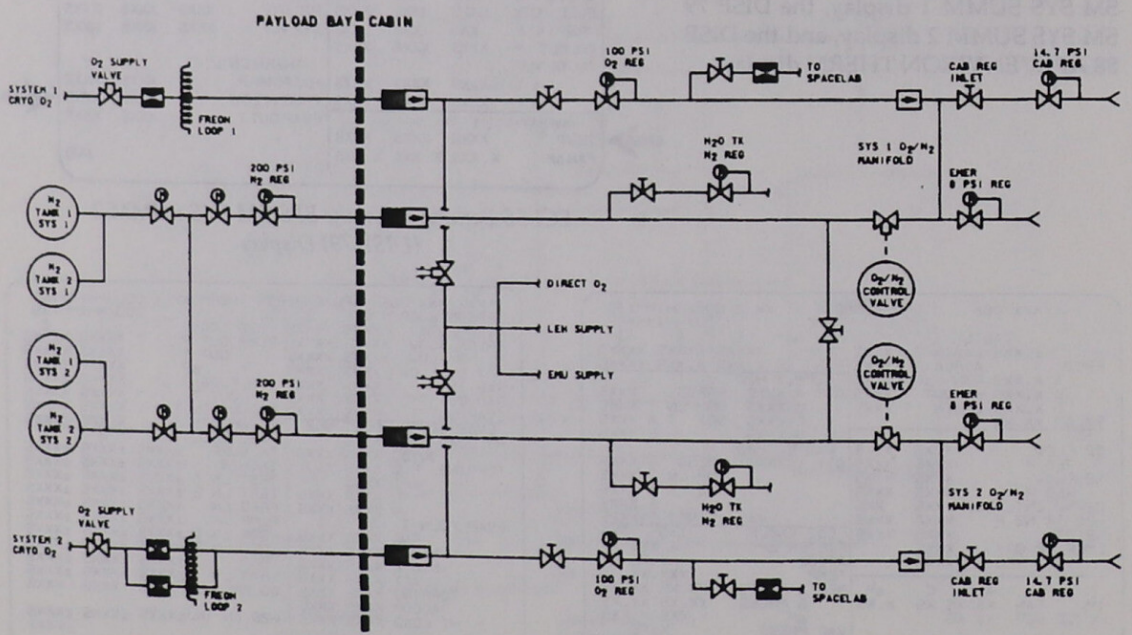

Pressure Control System

and waste water tanks. Each crew member uses an average of 1.76 pounds of oxygen per day. Up to 7.7 pounds of nitrogen and 9 pounds of oxygen are used per day for normal loss of crew cabin gas to space and metabolic usage. The potable and waste water tanks are pressurized to 17 psig in order to expel water from the tanks for use by the crew or dumping overboard.

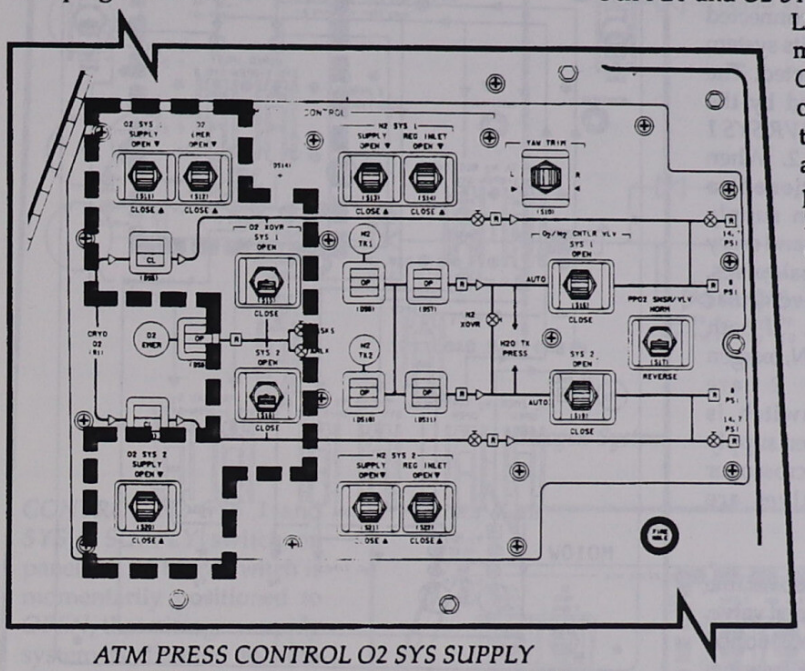

ATM PRESS CONTROL O2 SYS SUPPLY and XOVR Switches and Talkbacks on Panel L2

Oxygen System

Oxygen from the power reactant storage and distribution system cryogenic oxygen supply system is routed to the pressure control oxygen system 1 and system 2 supply valves. These valves are controlled by the *ATM PRESS CONTROL O2 SYS 1 SUPPLY* and *O2 SYS 2 SUPPLY* switches on panel L2. When one of the switches is momentarily positioned to *OPEN*, the corresponding valve opens to permit oxygen to flow through an oxygen restrictor at a maximum flow of 25 pounds per hour for both system 1 and 2. Oxygen also flows to a heat exchanger in the Freon coolant loop, which warms the oxygen supply to the oxygen regulator of that system before it flows into the cabin. Freon loop 1 warms system 1 oxygen, and loop 2 warms system 2. A talkback indicates *OP* when the valve is open. When the switch is momentarily positioned to *CLOSE*, the valve is closed, isolating that oxygen supply system. The talkback indicates *CL*.

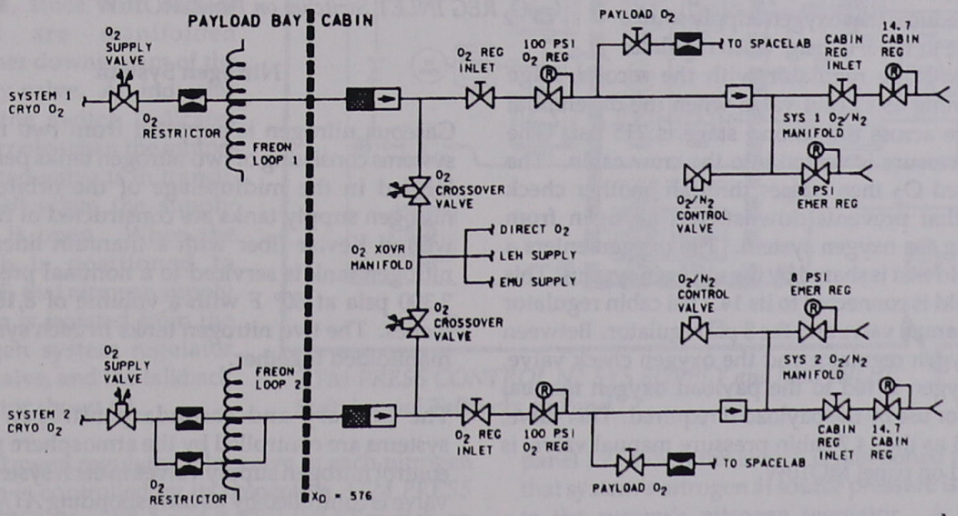

Oxygen System

Next, the oxygen piping penetrates the bulkhead and enters the crew compartment. A check valve downstream of the Freon loop heat exchanger prevents oxygen from flowing from one supply source to the other when the crossover valves are open. Downstream of the oxygen check valve, oxygen systems 1 and 2 are connected by a crossover valve that permits system 1 and system 2 to be interconnected. The crossover valves are controlled by the *ATM PRESS CONTROL O2 XOVR SYS 1* and *SYS 2* switches on panel L2. When one of the switches is positioned to *OPEN*, the associated oxygen supply system is directed to the launch and entry helmet O_2 supply 1 and 2 manual valves, airlock oxygen 1 and 2 extravehicular mobility unit, and direct O_2. If both switches are positioned to *OPEN*, oxygen supply systems 1 and 2 are interconnected. When a switch is positioned to *CLOSE*, that oxygen supply system is isolated from the crossover feature. The crossover valves are normally open.

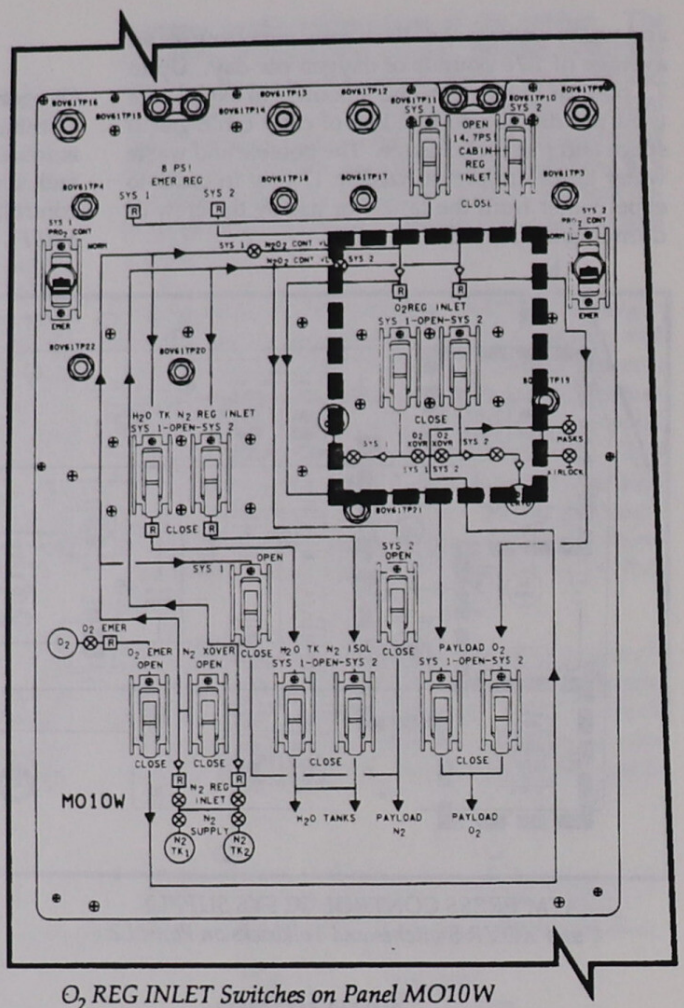

O_2 REG INLET Switches on Panel MO10W

Downstream of the oxygen crossover line is an oxygen regulator inlet manual valve. When the valve is manually positioned to *OPEN* by the *O_2 REG INLET* switch on panel MO10W, the oxygen supply system is directed to its oxygen regulator, which reduces that oxygen supply source pressure to 100 ± 10 psig. Each regulator is a two-stage regulator with the second stage functioning as a relief valve when the differential pressure across the second stage is 215 psi. The relief pressure is vented into the crew cabin. The regulated O_2 then passes through another check valve that prevents downstream nitrogen from entering the oxygen system. The oxygen enters a manifold that is shared by the nitrogen system. This manifold is connected to its 14.7 psi cabin regulator inlet manual valve and the 8 psi regulator. Between the oxygen regulator and the oxygen check valve, the oxygen is fed to the payload oxygen manual valve for use by the payload if required. This valve, as well as the 14.7 cabin pressure manual valve, is located on panel MO10W.

Nitrogen System

Gaseous nitrogen is supplied from two nitrogen systems consisting of two nitrogen tanks per system located in the midfuselage of the orbiter. The nitrogen supply tanks are constructed of filament-wound Kevlar fiber with a titanium liner. Each nitrogen tank is serviced to a nominal pressure of 3,300 psia at 80° F with a volume of 8,181 cubic inches. The two nitrogen tanks in each system are manifolded together.

The primary and secondary nitrogen supply systems are controlled by the atmosphere pressure control nitrogen supply valves in each system. Each valve is controlled by its corresponding *ATM PRESS*

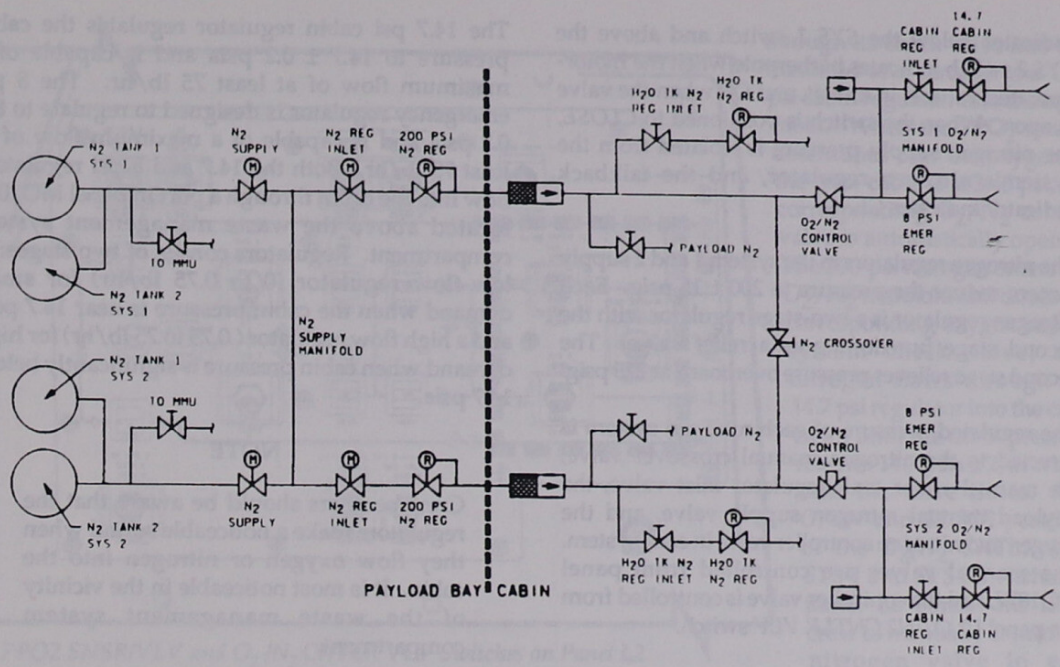

Nitrogen System

CONTROL N2 SYS 1 and *SYS 2 SUPPLY* switch on panel L2. When a switch is momentarily positioned to *OPEN*, that nitrogen supply system is directed to both atmosphere pressure control system regulator inlet valves, since both sets of tanks are manifolded together downstream of the supply valve. An indicator near the switch indicates barberpole when the motor-operated valve is in transit, and *OP* when the supply valve is open. When the switch is positioned to *CLOSE*, that nitrogen supply system is isolated from the nitrogen system regulator inlet valve, and the talkback indicator shows *CL*.

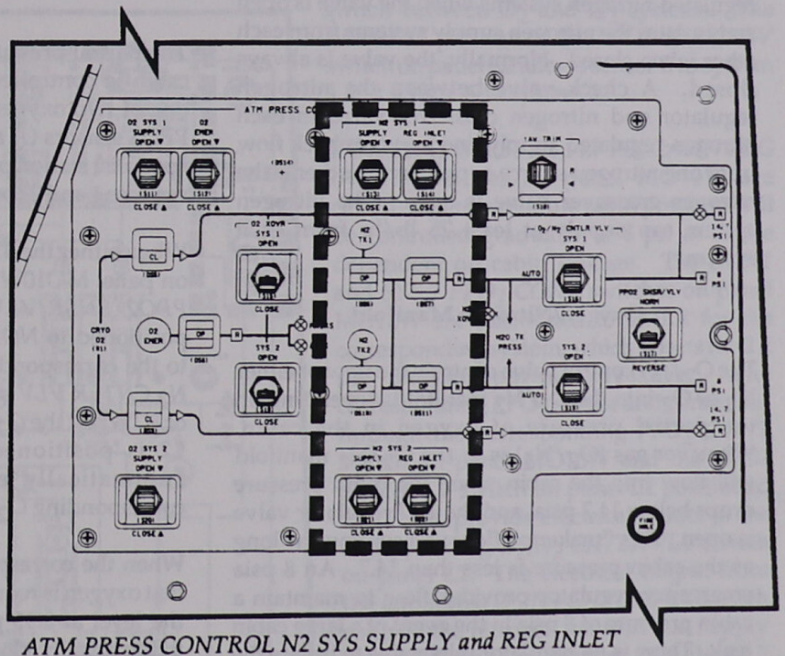

ATM PRESS CONTROL N2 SYS SUPPLY and REG INLET Switches and Talkbacks on Panel L2

The nitrogen regulator inlet valve in each nitrogen system is controlled by its respective *ATM PRESS CONTROL N_2 SYS 1* and *2 REG INLET* switch on panel L2. When the switch is positioned to *OPEN*, that system's nitrogen at source pressure is directed to the system's nitrogen regulator. A talkback

indicator below the *SYS 1* switch and above the *SYS 2* switch indicates barberpole when the motor-operated valve is in transit, and *OP* when the valve is open. When the switch is positioned to *CLOSE*, the nitrogen supply pressure is isolated from the system's nitrogen regulator, and the talkback indicator indicates *CL*.

The nitrogen regulators in the system 1 and 2 supply system reduce the pressure to 200 ± 15 psig. Each nitrogen regulator is a two-stage regulator with the second stage functioning as a relief valve. The second stage relieves pressure overboard at 275 psig.

The regulated pressure of each nitrogen system is directed to the nitrogen manual crossover valve, the manual water tank regulator inlet valve, the payload manual nitrogen supply valve, and the oxygen and nitrogen controller valve in each system. The manual valves are controlled from panel MO10W, and the controller valve is controlled from the panel L2 *O2/N2 CNTLR VLV* switch.

The nitrogen crossover manual valve connects both regulated nitrogen systems when the valve is open and isolates the nitrogen supply systems from each other when closed. Normally, the valve is always closed. A check valve between the nitrogen regulator and nitrogen crossover valve in each nitrogen-regulated supply line prevents back flow from one nitrogen source supply to the other if the nitrogen crossover valve is open. The nitrogen system can supply at least 75 lb/hr from each system.

Oxygen/Nitrogen Manifold

The O_2/N_2 control valve controls the flow of either N_2 or O_2 into the O_2/N_2 manifold, depending on the partial pressure of oxygen in the cabin. Whatever gas (O_2/N_2) is in the O_2/N_2 manifold will flow into the cabin when the cabin pressure drops below 14.7 psia, and the 14.7 regulator valve is open. This "makeup" flow will continue as long as the cabin pressure is less than 14.7. An 8 psia emergency regulator provides flow to maintain a cabin pressure of 8 psia in the event of a large cabin leak. There is no regulator inlet valve to isolate the 8 psia emergency regulator; therefore, it is always configured to provide flow.

The 14.7 psi cabin regulator regulates the cabin pressure to 14.7 ± 0.2 psia and is capable of a maximum flow of at least 75 lb/hr. The 8 psi emergency regulator is designed to regulate to 8 ± 0.2 psia and is capable of a maximum flow of at least 75 lb/hr. Both the 14.7 and 8 psi regulators flow into the cabin through a port in panel MO10W located above the waste management system compartment. Regulators consist of two stages: a low-flow regulator (0 to 0.75 lb/hr) for small demand when the cabin pressure is near 14.7 psia and a high flow regulator (0.75 to 75 lb/hr) for high demand when cabin pressure is significantly below 14.7 psia.

NOTE

Crewmembers should be aware that the regulators make a noticeable sound when they flow oxygen or nitrogen into the cabin. It is most noticeable in the vicinity of the waste management system compartment.

PPO_2 Control

The partial pressure of oxygen (PPO_2) in the crew cabin is controlled automatically during orbit by one of two oxygen and nitrogen controllers. Two PPO_2 sensors (A and B) located under the mission specialist station provide inputs to the PPO_2 control systems 1 and 2 controller and switches respectively.

When either the *SYS 1* or *SYS 2 PPO2 CONT* switch on panel MO10W is positioned to *NORM*, and the *PPO2 SNSR/VLV* switch on panel L2 is also positioned to *NORM*, electrical power is supplied to the corresponding *ATM PRESS CONTROL O2/N2 CNTLR VLV* switches on panel L2 for system 1 or 2. When the *O2/N2 CNTLR VLV* switch on panel L2 is positioned to *AUTO*, electrical power automatically energizes or deenergizes the corresponding O_2/N_2 control valve.

When the corresponding PPO_2 sensor determines that oxygen is required in the crew cabin to maintain the level at 2.95 psi, the nitrogen supply valve is automatically closed. When the 200-psi nitrogen supply in the manifold drops below 100 psi, the corresponding oxygen supply system now flows

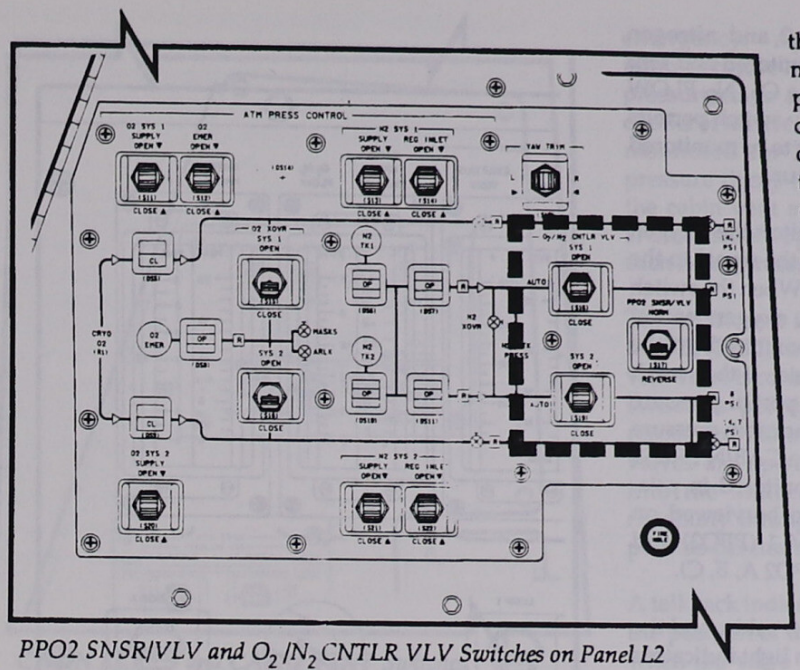

PPO2 SNSR/VLV and O_2 /N_2 CNTLR VLV Switches on Panel L2

through its check valve into the manifold and through the 14.7 psi cabin regulator into the crew cabin. When the PPO_2 sensor determines that the oxygen in the crew cabin is at 3.45 psi, the corresponding O_2/N_2 control valve is automatically opened. The 200-psi nitrogen enters the O_2/N_2 manifold and closes the corresponding oxygen supply system check valve, and nitrogen flows through the 14.7 psi regulator into the crew cabin until the cabin pressure reaches 14.7 psia ± 2, at which time the valve closes. The *OPEN* and *CLOSE* positions of the *O_2/N_2 CNTLR VLV SYS 1* and *SYS 2* switches on panel L2 permit the flight crew to manually control the nitrogen valve in each system, and thus manually switch between O_2 and N_2 systems. The *REVERSE* position of the *PPO2 SNSR/VLV* switch on panel L2 allows sensor B to system 1 and sensor A to system 2.

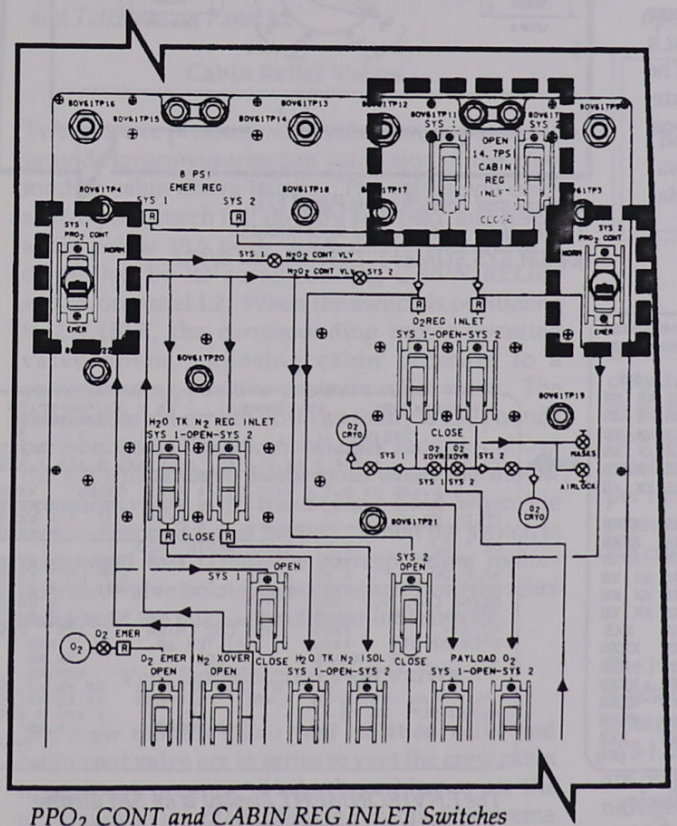

PPO_2 CONT and CABIN REG INLET Switches on Panel MO10W

If the *SYS 1* and *SYS 2 14.7 PSI CABIN REG INLET* switches on panel MO10W are closed, the crew module cabin pressure will be controlled gradually to 8 psi at a rate dependent on cabin leakage. The *SYS 1* and *SYS 2 PPO_2 CONT* switches on panel MO10W are positioned to *EMER* for the corresponding system, which selects the 2.2 psi oxygen partial pressure. The corresponding PPO_2 sensor and controller, through the corresponding *PPO_2 CONT* switch on panel MO10W and the *PPO2 SNSR/VLV* switch on panel L2 positioned to *NORM*, provide electrical inputs to the corresponding *O_2/N_2 CNTLR VLV* switch on panel L2. The electrical output from the applicable *O_2/N_2 CNTLR VLV* switch controls the nitrogen valve in that supply system in the same manner as in the 14.7 psi mode except that the crew module cabin oxygen partial pressure is maintained at 2.2 psi. This is part of the original design, but it has never been used.

The oxygen systems 1 and 2 and nitrogen systems 1 and 2 flows are monitored and sent to the rotary switch below the O_2/N_2 FLOW meter on panel O1. The rotary switch permits the flow of the selected system to be monitored on the meter in pounds per hour.

PPO_2 sensors A and B monitor the oxygen partial pressure and transmit the signal to the *SENSOR* switch on panel O1. When the switch is positioned to *SENSOR A*, oxygen partial pressure from sensor A is monitored on the PPO_2 meter on panel O1 in psia. If the switch is set on *SENSOR B*, oxygen partial pressure from sensor B is monitored. The cabin pressure sensor transmits directly to the CABIN PRESS meter on panel O1 and is monitored in psia. All these parameters can also be viewed on CRT displays SM SYS SUMM 1 (PPO2) and DISP 66, ENVIRONMENT (PPO2 A, B, C).

A klaxon will sound in the crew cabin, and the *MASTER ALARM* push button light indicators will be illuminated if the change in pressure versus change in time (dP/dT) decreases at a rate of 0.08 psi per minute or greater. The normal cabin dP/dT is zero psi per minute, plus or minus 0.01 psi, for all normal operations.

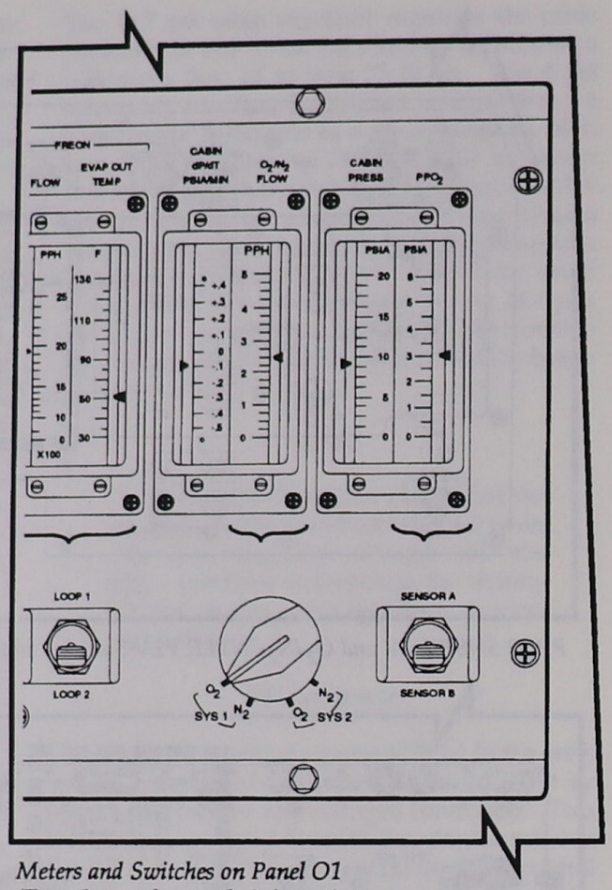

Meters and Switches on Panel O1
(Transducers also supply information for SM SYS SUMM 1, DISP 66, and C/W.)

XXXX/XXX/078 SM SYS SUMM 1 XX X DDD/HH:MM:SS
DDD/HH:MM:SS

SMOKE	1/A	2/B
CABIN	XX.XS	
L/R FD	XX.XS	XX.XS
AV BAY 1	XX.XS	XX.XS
2	XX.XS	XX.XS
3	XX.XS	XX.XS

CABIN		
PRESS	XX.XS	
dP/dT	±.XXS	
BU/EQ	±.XXS	±.XXS
PPO2	X.XXS	X.XXS
FAN ΔP	X.XXS	
HX OUT T	XXXS	
O2 FLOW	X.XS	X.XS
N2 FLOW	X.XS	X.XS
IMU FAN ΔP		X.XXS

ΔV	FC1	FC2	FC3
SS1	XXXS	XXXS	XXXS
SS2	XXXS	XXXS	XXXS
SS3	XXXS	XXXS	XXXS
TOTAL AMPS	XXXXS		
KW	XXS		

DC VOLTS	1/A	2/B	3/C
FC	XX.XS	XX.XS	XX.XS
MAIN	XX.XS	XX.XS	XX.XS
CNTL AB	XX.XS	XX.XS	XX.XS
BC	XX.XS	XX.XS	XX.XS
CA	XX.XS	XX.XS	XX.XS
ESS	XX.XS	XX.XS	XX.XS
AC			
VOLT ϕ A	XXXS	XXXS	XXXS
ϕ B	XXXS	XXXS	XXXS
ϕ C	XXXS	XXXS	XXXS
AMPS ϕ A	XX.XS	XX.XS	XX.XS
ϕ B	XX.XS	XX.XS	XX.XS
ϕ C	XX.XS	XX.XS	XX.XS
FUEL CELL PH	XXS	XXS	XXS
AMPS	XXXS	XXXS	XXXS
REAC VLV	XXS	XXS	XXS
STACK T	±XXXS	±XXXS	±XXXS
EXIT T	XXXS	XXXS	XXXS
COOL P	XXXS	XXXS	XXXS
PUMP	XXS	XXS	XXS
			(XX)

The SM SYS SUMM 1 display is an SM display (DISP 78) available in SM OPS 2 and 4.

XXX/XXX/066 ENVIRONMENT XX X DDD/HH:MM:SS
DDD/HH:MM:SS

CABIN		AV BAY	1	2	3
dP/dT	±.XXS	TEMP	XXXXS	XXXXS	XXXXS
CABIN P	XX.XS	FAN ΔP	X.XXS	X.XXS	X.XXS
AIRLK P	XX.XS				
A X.XXS FAN ΔP	X.XXS	SUPPLY H2O			
B X.XXS HX OUT T	XXXS	QTY A	XXXS	PRESS	XXXS
C X.XXS CABIN T	XXXS	B	XXXS	DMP LN T	XXXS
PPCO2 XX.XS		C	XXXS	NOZ T A	XXXS
		D	XXXS	B	XXXS

	1	2
O2 FLOW	X.XS	X.XS
REG P	XXXS	XXXS
N2 FLOW	X.XS	X.XS
REG P	XXXS	XXXS
O2/N2 CNTL VLV	XXS	XXS
H2O TK N2 P	XXXS	XXXS
N2 QTY	XXXS	XXXS
EMER O2 QTY	XXXS	
REG P	XXXXS	

	A	B	C	ΔP
IMU FAN	XS	XS	XS	X.XS
HUMID SEP	XS	XS		

WASTE H2O			
QTY 1	XXXS	PRESS	XXXS
		DMP LN T	XXXS
		NOZ T A	XXXS
		B	XXXS
	VAC VT NOZ T		XXXS
CO2 CNTLR		1XS	2XS
FILTER ΔP		X.XXS	
PPCO2		XX.XS	
TEMP		XXX.XS	
BED A PRESS		XX.XS	XX.XS
B PRESS		XX.XS	XX.XS
ΔP		X.XXS	X.XXS
VAC PRESS		X.XS	
			(XX)

The ENVIRONMENT display is an SM display (DISP 66) available in SM OPS 2 and 4.

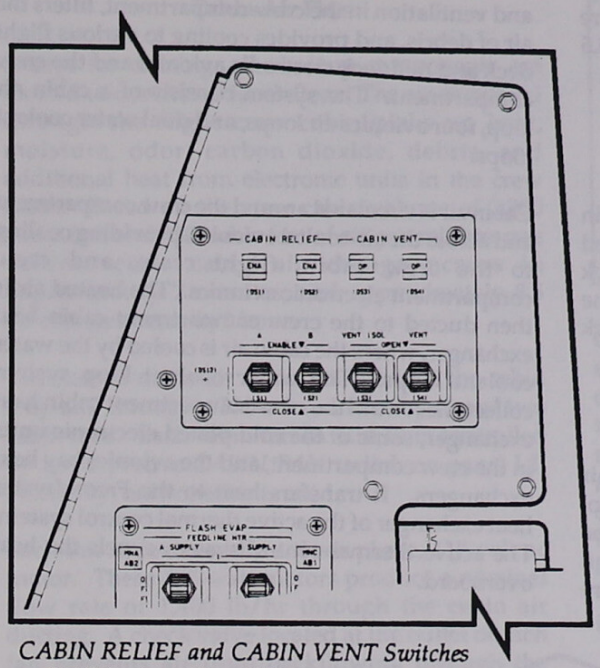

CABIN RELIEF and CABIN VENT Switches and Talkbacks on Panel L2

Cabin Relief Valves

Two positive pressure relief valves are in parallel to provide overpressurization protection of the crew module cabin above 16 psid. The valves will crack at 16.0 psid, reach full flow by 16.8 psid, and reseat again below 15.5 psid. Each cabin relief valve is controlled by its corresponding *CABIN RELIEF* switch on panel L2. When the switch is positioned to *ENABLE*, the corresponding motor-operated valve opens, exposing cabin pressure to a corresponding positive pressure relief valve. The relief valve maximum flow capability is 150 pounds per hour at 16.0 psid. A talkback indicator above the switch indicates barberpole when the motor-operated valve is in transit, and *ENA* when the motor-operated valve is open. When the switch is positioned to *CLOSE*, the corresponding motor-operated valve isolates cabin pressure from the relief valve, and the talkback indicator indicates *CL*.

Vent Isolation and Vent Valves

The crew module cabin vent isolation valve and cabin vent valve are in series to vent the crew cabin to ambient pressure while the orbiter is on the ground or to vent the cabin on orbit in an extreme emergency. Approximately 1 hour and 30 minutes before lift-off, the crew module cabin is pressurized to approximately 16.7 psi for leak checks of the crew cabin. Cabin pressure is then monitored for 35 minutes to verify that no pressure decay is occurring. During this time, the cabin vent and cabin vent isolation valves are alternately opened and closed to verify that each holds pressure.

The cabin vent isolation valve is controlled by the *VENT ISOL* switch on panel L2, and the cabin vent valve is controlled by the *VENT* switch. Each switch is positioned to *OPEN* to control its respective motor-operated valve. When both valves are open, the cabin pressure is vented into the midfuselage. The maximum flow capability through the valves at 0.2 psid is 900 pounds per hour.

A talkback indicator above each switch indicates the position of the respective valve: barberpole when the valve is in transit, and *OP* when it is open.

> **WARNING**
>
> Because of the high flow capability of the cabin vent isolation valves, these valves should never be opened after lift-off.

Negative Pressure Relief Valves

If the crew cabin pressure is lower than the pressure outside the cabin, two negative pressure relief valves in parallel will open at 0.2 to 0.7 psid, permitting flow of ambient pressure into the crew cabin. The maximum flow rate at 0.5 psid is zero to 654 pounds per hour. Caps over each valve provide a positive pressure seal and will pop off when the valve opens. No crew controls are necessary.

Water Tank Regulator Inlet Valve

The H_2O TK N_2 REG INLET valve in each nitrogen-regulated supply system permits nitrogen to flow to its corresponding regulator and H_2O TK N_2 ISOL SYS 1, 2 valve. The inlet and isolation manual valves are on panel MO10W. The water regulator in each nitrogen system reduces the 200 psi supply pressure to 15.5 to 17.0 psig. Each regulator is a two-stage

regulator with the second stage relieving pressure into the crew cabin at a differential pressure of 18.5 ± 1.5 psig.

Airlock Depressurization and Equalization Valves

The airlock pressure is maintained equal with cabin pressure using the dual equalization valves located on the cabin/airlock hatch. The airlock depressurization valve is used to depressurize the cabin to 10.2 psia and to depressurize the airlock for EVA.

Atmospheric Revitalization System

The atmospheric revitalization system circulates air and water through the crew compartment to control relative humidity between 30 and 75 percent. The system maintains carbon dioxide and carbon monoxide at non-toxic levels, controls temperature and ventilation in the crew compartment, filters the air of debris, and provides cooling to various flight deck and middeck electronic avionics and the crew compartment. The system consists of a cabin air loop, four avionics air loops, and dual water coolant loops.

Cabin air is circulated around the crew compartment and across the air-cooled avionics, providing cooling to the crew cabin, flight crew, and crew compartment electronic avionics. The heated air is then ducted to the crew compartment cabin heat exchanger, where the cabin air is cooled by the water coolant loops. The water coolant loop system collects heat from the crew compartment cabin heat exchanger, some of the cold plated electronic units in the crew compartment, and the avionics bay heat exchangers. It transfers heat to the Freon/water heat exchanger of the active thermal control system. The active thermal control system expels the heat overboard.

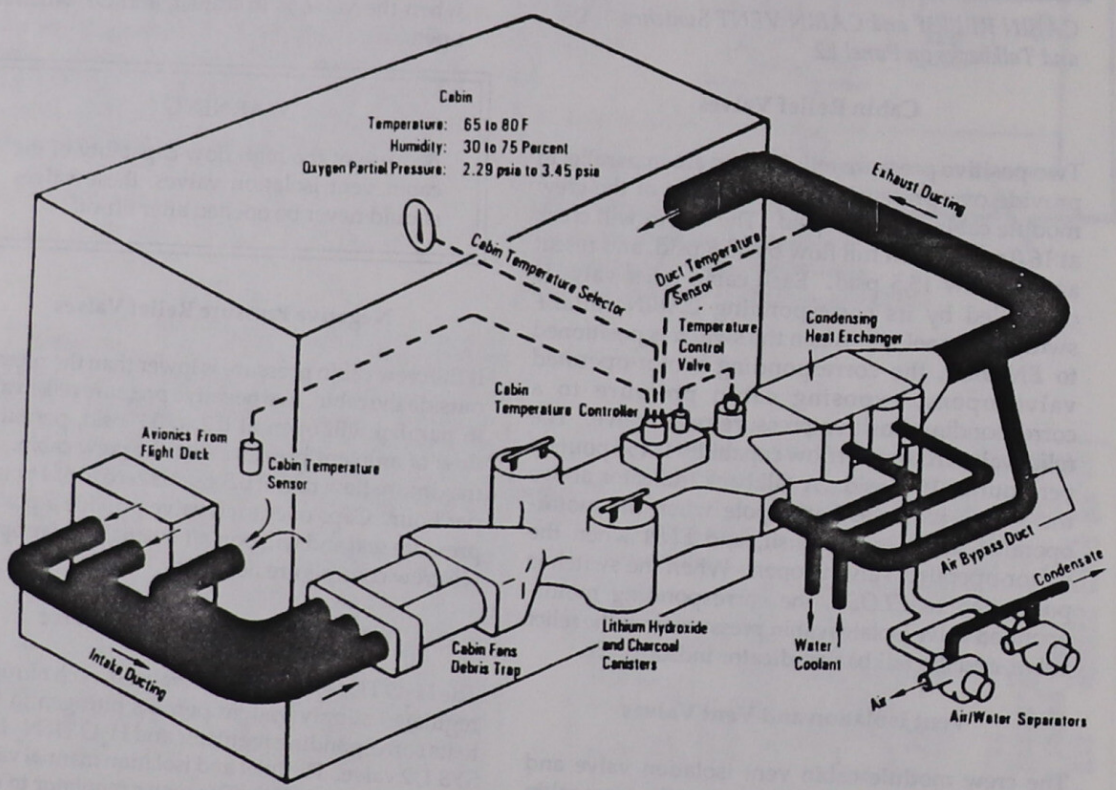

Cabin Air

Cabin Air Flow

Except for ducting, all air loop components are located under the middeck floor. The air circulated through the flight crew cabin picks up heat, moisture, odor, carbon dioxide, debris, and additional heat from electronic units in the crew cabin. Based on the crew cabin volume of 2,300 cubic feet and 330 cubic feet of air per minute, one volume crew cabin air change occurs in approximately 7 minutes, and approximately 8.5 air changes occur in 1 hour.

The heated cabin air is drawn through the cabin loop and through a 300-micron filter by one of two cabin fans. Each cabin fan (A and B) is controlled by its respective *CABIN FAN* switch on panel L1. Normally, only one fan is used.

Each fan is powered by a three-phase, 115-volt ac motor. These 495-watt motors produce a nominal flow rate of 1,400 lb/hr through the cabin air ducting. A check valve located at the outlet of each fan prevents air from backflowing through the nonoperating fan. This flapper-type check valve will open if there is a 2 psi differential pressure across the valve. A cabin fan will not start on two phases of ac. However, if the cabin fan is already operating when a phase of ac is lost, the fan will continue to run on two phases of ac. A cabin fan can be started on 2-1/2 phases of ac, with the extra half phase provided by the induced voltage generated by other rotating equipment (that is, fans and pumps) running on that ac bus. If a phase of ac is lost with a short, then the induced voltage will not be usable, and starting the cabin fan will not be possible.

The cabin air leaves the cabin fan at a rate of about 1,400 lb/hr. An orifice in the duct directs approximately 120 lb/hr to each of two lithium hydroxide canisters, where carbon dioxide is removed, and activated charcoal removes odors and trace contaminants. The canisters are changed periodically on a predetermined schedule, generally one or two times a day, through an access door. (For larger crews, the canisters are changed more frequently.) Each canister is rated at 48 man-hours. Up to 30 spare canisters are stored under the middeck floor in a locker between the cabin heat exchanger and water tanks.

CAUTION

During lithium hydroxide canister changeout, both cabin fans should be turned off. Dust from the canisters kicked up by the cabin fan has caused eye and nose irritation. Lithium hydroxide dust may also be a contributing factor to humidity separator failures.

Cabin air is then directed to the crew cabin heat exchanger where heat is transferred to the water coolant loop. Humidity condensation that forms in the heat exchanger is pushed by the air flow to the slurper. One of two humidity separators draws air and water from the slurper. In the humidity separator, centrifugal force separates the water from the air. The fan separator removes up to approximately 4 pounds of water per hour. The water is routed to the waste water tank, and the air is ducted through the exhaust for return to the cabin.

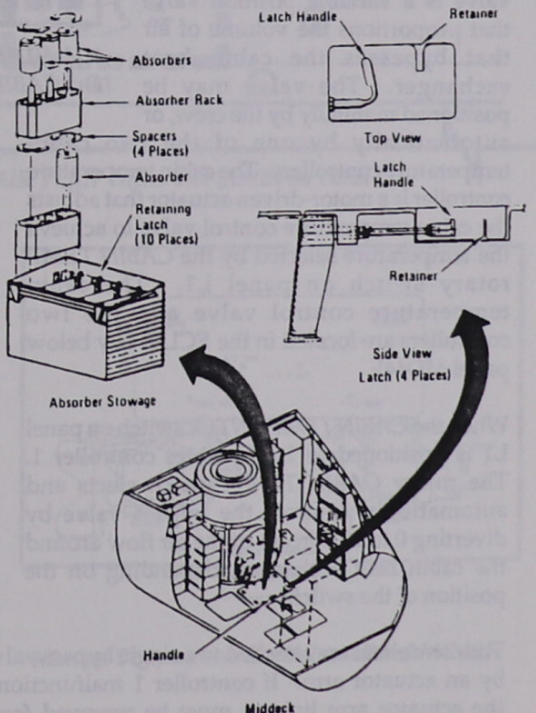

Carbon Dioxide Absorbers

There are two fan separators (A and B) controlled individually by *HUMIDITY SEP A* and *B* switches on panel L1. Normally, only one fan separator is used. The relative humidity in the crew cabin is maintained between 30 and 65 percent in this manner.

A small portion of the revitalized and conditioned air from the cabin heat exchanger is ducted to the carbon monoxide removal unit, which converts carbon monoxide to carbon dioxide. A bypass duct carries warm cabin air around the cabin heat exchanger and mixes it with the revitalized and conditioned air to control the crew cabin air temperature in a range between 65° and 80° F.

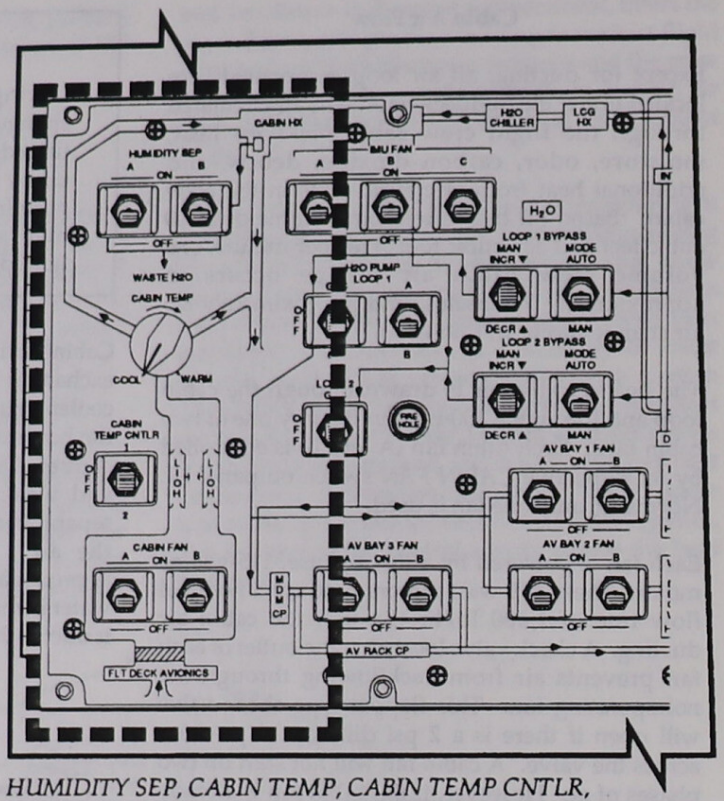

HUMIDITY SEP, CABIN TEMP, CABIN TEMP CNTLR, and CABIN FAN Switches on Panel L1

Cabin Air Temperature Control

The cabin temperature control valve is a variable position valve that proportions the volume of air that bypasses the cabin heat exchanger. The valve may be positioned manually by the crew, or automatically by one of the two cabin temperature controllers. The cabin temperature controller is a motor-driven actuator that adjusts the cabin temperature control valve to achieve the temperature selected by the *CABIN TEMP* rotary switch on panel L1. The cabin temperature control valve and the two controllers are located in the ECLSS bay below panel MD44F.

When the *CABIN TEMP CNTLR* switch on panel L1 is positioned to 1, it enables controller 1. The rotary *CABIN TEMP* switch elects and automatically controls the bypass valve by diverting 0 to 70 percent of the air flow around the cabin heat exchanger, depending on the position of the switch.

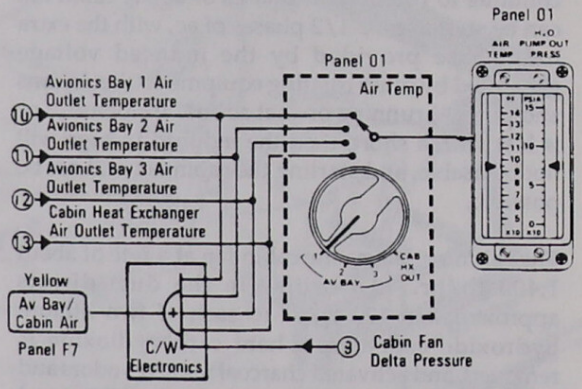

Avionics Bay and Cabin Heat Exchanger Temperature Monitoring and Caution/Warning, Crew Cabin Air

The controllers are attached to a single bypass valve by an actuator arm. If controller 1 malfunctions, the actuator arm linkage must be removed from controller 1 by the flight crew at panel MD44F and connected manually to controller 2 before the *CABIN TEMP CNTLR* switch on panel L1 is positioned to 2. This enables controller 2 and permits the rotary *CABIN TEMP* switch to control controller 2 and the single bypass control valve. The *CABIN TEMP*

CNTLR switch's *OFF* position removes electrical power from both controllers, the rotary switch, and automatic control of the single bypass valve. For ascent and entry, the *CABIN TEMP* is set to full *COOL* to ensure maximum air cooling during these relatively warm phases of flight.

The air from the cabin heat exchanger and the bypassed air come together in the supply duct downstream of the heat exchanger and are exhausted into the crew cabin through the CDR and PLT consoles and through various station duct outlets into the crew cabin.

Cabin Temperature Monitoring

The cabin heat exchanger outlet temperature is transmitted to a rotary switch below the AIR TEMP meter on panel O1. When the switch is positioned to *CAB HX OUT*, the temperature can be monitored on the meter. The cabin heat exchanger outlet temperature provides an input to the yellow *AV BAY/CABIN AIR* caution and warning light on panel F7. The light is illuminated if the cabin heat exchanger outlet temperature is above 145° F, if avionics bay 1, 2, or 3 temperatures exceed 130° F, or if the cabin fan delta pressure is less than 4.2 inches of water or above 6.8 inches of water.

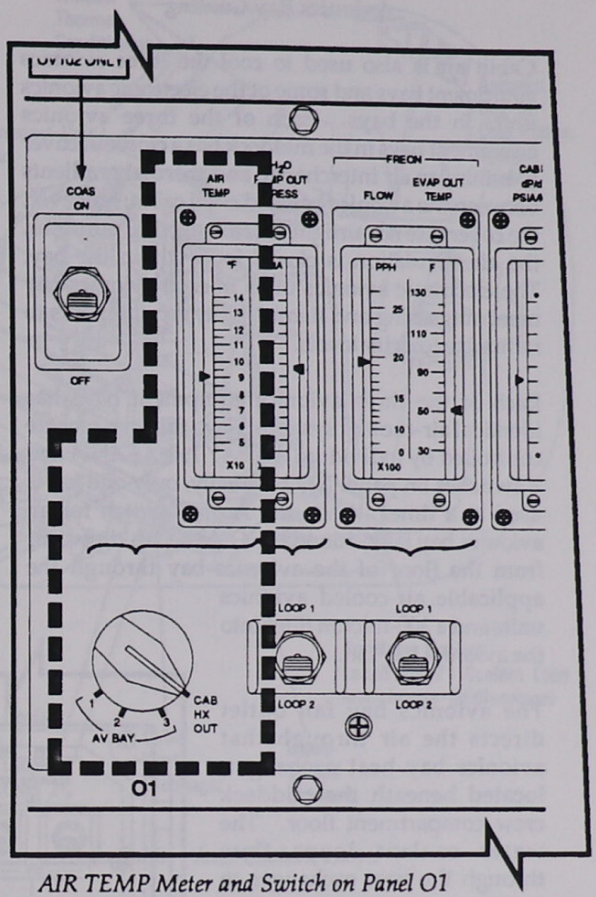

AIR TEMP Meter and Switch on Panel O1

Manual Temperature Control

If cabin temperature controllers 1 and 2 or the *CABIN TEMP* rotary switch on panel L1 are unable to control the single bypass valve, the flight crew can position the single bypass valve actuator drive arm to the desired position and pin the bypass valve arm to one of four fixed holes (*FULL COOL*, *FULL HEAT*, etc.) on panel MD44F. The *FULL COOL* position establishes the maximum cabin air flow rate to the cabin heat exchanger, the *2/3 COOL* position establishes a flow rate that provides approximately two-thirds of the maximum cooling capability, the *1/3 COOL* position establishes a flow rate that provides approximately one-third of the maximum cooling, and the *FULL HEAT* position establishes the minimum cabin air flow rate to the cabin heat exchanger.

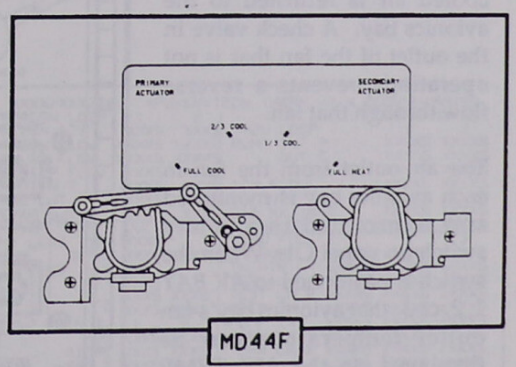

Manual Temperature Controls on Panel MD44F

Avionics Bay Cooling

Cabin air is also used to cool the three avionics equipment bays and some of the electronic avionics units in the bays. Each of the three avionics equipment bays in the middeck has a closeout cover to minimize air interchange and thermal gradients between the avionics bay and crew cabin; however, the covers are not airtight. For all practical purposes, the air circulation is closed loop within the bay. The electronic avionics units in each avionics bay meet outgassing and flammability requirements to minimize toxicity levels.

Each of the three avionics equipment bays has identical air-cooling systems. Two fans per bay are controlled by individual *AV BAY 1, 2, 3 FAN A* and *B* switches on panel L1. Normally, only one fan is used at a time. When the A or B switch for an avionics bay is positioned to *ON*, the fan draws air from the floor of the avionics bay through the applicable air-cooled avionics units and a 300-micron filter into the avionics bay fan.

The avionics bay fan outlet directs the air through that avionics bay heat exchanger, located beneath the middeck crew compartment floor. The water coolant loops flow through the heat exchanger to cool the fan outlet air, and the cooled air is returned to the avionics bay. A check valve in the outlet of the fan that is not operating prevents a reverse flow through that fan.

The air outlet from the fan in each avionics bay is monitored and transmitted to a rotary switch on panel O1. When the switch is positioned to *AV BAY 1, 2,* or *3*, that avionics bay's fan outlet temperature can be displayed on the AIR TEMP meter. The air outlet temperature of each avionics bay also provides an input to the yellow *AV BAY/CABIN AIR* caution and warning light on panel F7. This light is illuminated if any of the avionics bay outlet temperatures are above 130° F. The *OFF* position of the *A* or *B* switch removes power from that avionics bay fan.

Inertial Measurement Unit (IMU) Cooling

The three IMUs are cooled by one of three fans drawing cabin air through a 300-micron filter and across the three IMUs. The fans are located in avionics bay 1. The fan outlet air flows through the IMU heat exchanger located on the flight deck and is cooled by the water coolant loops before returning to the crew cabin. Each IMU fan is controlled by the *IMU FAN* switches on panel L1. The *ON* position turns the corresponding fan on, and the *OFF* position turns it off. Normally, one fan is sufficient because one fan cools all three IMUs. A check valve is installed on the outlet of each fan to prevent a reverse air flow through the fans that are not operating.

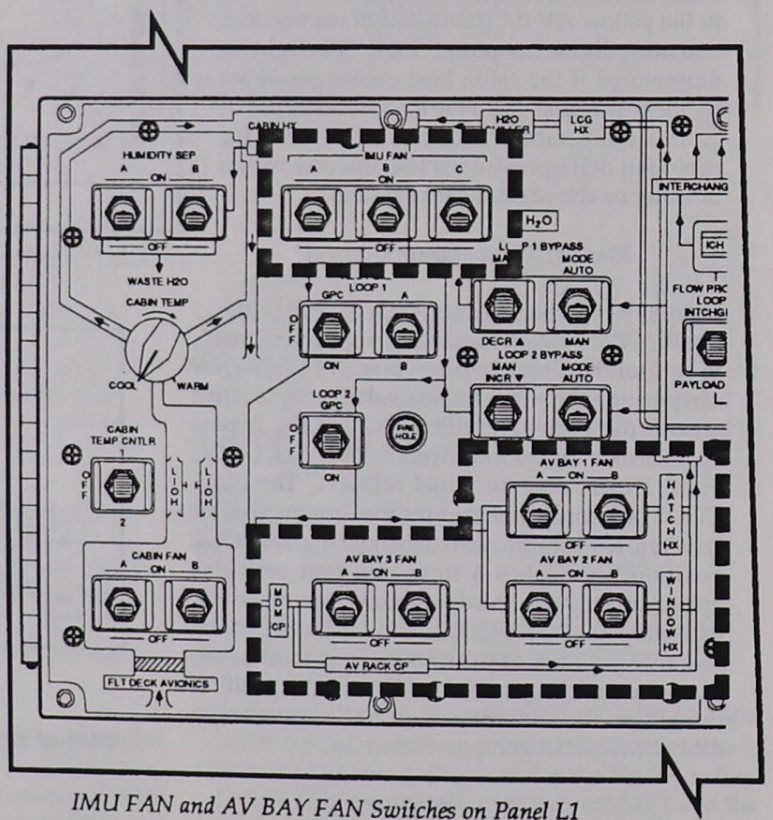

IMU FAN and AV BAY FAN Switches on Panel L1

Spacelab Air Revitalization

If the payload bay contains the Spacelab module, a kit is installed to provide ducting for the flow of cabin air from the middeck through the airlock and tunnel to the module. Information about the kit and its operation is provided in Section 2.21.

Water Coolant Loop System

The water coolant loops circulate water through the crew compartment to collect excess heat and transfer it to the Freon coolant loops. Two complete, separate water coolant loops flow side by side and can operate at the same time, although only one is active at any given time. Loop 2 is normally the active loop. The only difference between loops 1 and 2 is that loop 1 (the backup) has two water pumps, and loop 2 has one pump. The water pumps are located in the ECLSS bay below the forward lockers. The pumps are powered by three-phase, 115-volt ac motors.

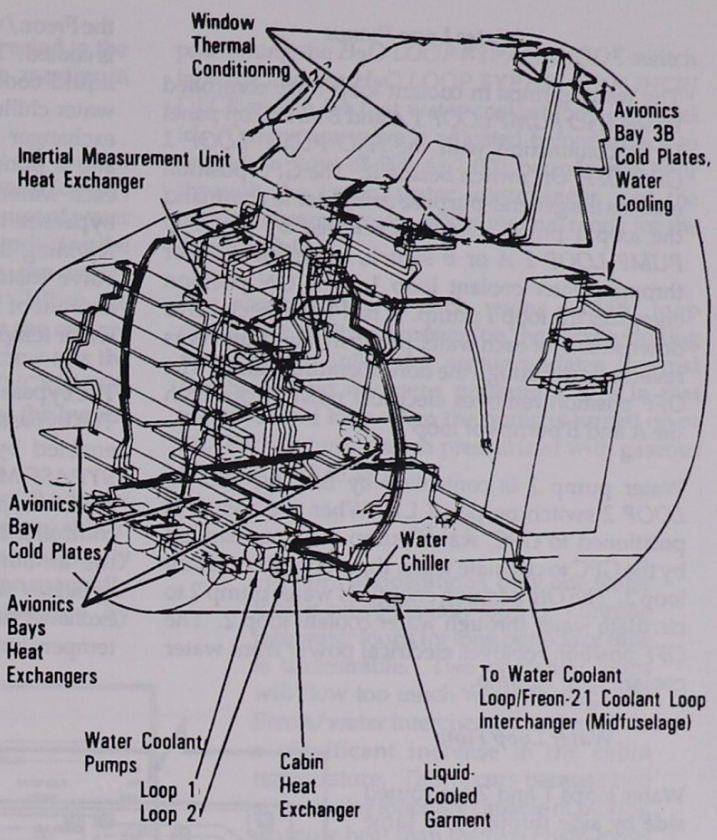

Crew Cabin Water Coolant Loops

Some electronic units in each of the avionics equipment bays and in the cabin are mounted on cold plates. The water coolant loops flow through the cold plates, and the heat generated by the electronics unit is transferred to the cold plate and then to the water coolant loop, which carries heat from the electronic unit. The cold plates mounted on the shelves in each avionics equipment bay are connected in a series-parallel arrangement with respect to the water coolant loop flow.

Status of the water loops can be monitored on the APU/ENVIRON THERM display (DISP 88), which is available in SM OPS 2 and 4. The information is found in the items under H2O LOOP.

```
XXXX/XXX/088  APU/ENVIRON THERM XX X  DDD/HH:MM:SS
                                      DDD/HH:MM:SS
 FREON LOOP      1       2                  1       2
ACCUM QTY      XXX%    XXX%   H2O LOOP
FREON FLOW     XXX%    XXX%   PUMP OUT P      XXX%    XXX%
PL HX FLOW     XXX%    XXX%          OUT T     XXX%    XXX%
AFT CP FLOW    XXX%    XXX%          ΔP        XXX%    XXX%
RAD IN T       XXX%    XXX%   ICH FLOW         XXX%    XXX%
RAD OUT T      XXX%    XXX%          OUT T     XXX%    XXX%
EVAP OUT T     XXX%    XXX%   CAB HX IN T      XXX%    XXX%
 EVAP TEMP     DUCT    NOZ    ACCUM QTY        XXX%    XXX%
HI LOAD INBD   XXX%             APU FUEL T     1       2       3
        OUTBD  XXX%    XXX%   TK SURF       ±XXX%   ±XXX%   ±XXX%
TOPPING  FWD   XXX%           TK HTR        ±XXX%   ±XXX%   ±XXX%
          AFT  XXX%           TEST LN 1     ±XXX%   ±XXX%   ±XXX%
             L  XXX%   XXX%    TEST LN 2     ±XXX%   ±XXX%   ±XXX%
             R  XXX%   XXX%   FEED LN        ±XXX%   ±XXX%   ±XXX%
EVAP FDLN T     A       B     PUMP IN        ±XXX%   ±XXX%   ±XXX%
          FWD  XXX%   XXX%     DRN LN 1     ±XXX%   ±XXX%   ±XXX%
          MID 1  XXX%   XXX%   DRN LN 2     ±XXX%   ±XXX%   ±XXX%
          MID 2  XXX%   XXX%   OUT          ±XXX%   ±XXX%   ±XXX%
              AFT  XXX%   XXX%  BYP LN       ±XXX%   ±XXX%   ±XXX%
        TOPPING  XXX%   XXX%  GG SPLY LN    XXX%    XXX%    XXX%
           ACCUM  XXX%   XXX%
        HI LOAD  XXX%   XXX%  H20 LN INJ    ±XXX%   ±XXX%   ±XXX%
                                                              (XX)
```

APU/ENVIRON THERM Display (DISP 88)

Water Loop Pumps

The water pumps in coolant loop 1 are controlled by the *H_2O PUMP LOOP 1 A* and *B* switch on panel L1 in conjunction with the *H_2O PUMP LOOP 1 GPC, OFF, ON* switch beside it. The *GPC* position enables the general-purpose computer to command the loop 1 pump, which is selected by the *H_2O PUMP LOOP 1 A* or *B* switch, to circulate water through water coolant loop 1. The *ON* position energizes the loop 1 pump. A ball-type check valve downstream of each water pump in loop 1 prevents reverse flow through the non-operating pump. The *OFF* position removes electrical power from both the A and B pumps of loop 1.

Water pump 2 is controlled by the *H_2O PUMP LOOP 2* switch on panel L1. When the switch is positioned to *GPC*, water pump 2 is commanded by the GPC to circulate water through water coolant loop 2. The *ON* position energizes water pump 2 to circulate water through water coolant loop 2. The *OFF* position removes electrical power from water coolant loop 2 pump.

Water Loop Flow

Water loops 1 and 2 are routed side by side through the same areas. Downstream of each water pump, water flow splits into three parallel paths. One is through the avionics bay 1 air/water heat exchanger and cold plates. A second is through the avionics bay 2 air/water heat exchanger and cold plates, payload bay floodlight cold plates, and thermal conditioning of the crew cabin windows. A third is through the crew cabin MDM flight deck cold plates, the avionics bay 3A air/water heat exchanger and cold plates, and the avionics bay 3B cold plates. The three parallel paths in each coolant loop then rejoin upstream of the Freon/water heat interchanger. The flow path splits again with one parallel path in each water coolant loop flowing through the Freon/water interchanger, where the water loop is cooled. The cooled water then flows through the liquid-cooled garment heat exchanger, potable water chiller, cabin heat exchanger, and IMU heat exchanger to the respective water coolant loop 1 and 2 pump package. The other parallel path in each water coolant loop, containing warm water, bypasses the interchanger and heat exchanger, rejoining the loop at the loop pump package. A valve installed in the bypass path controls the amount of bypass flow, thus controlling the mixed water temperature out of the pump package.

The bypass valve is controlled by bypass controllers. The bypass controller in each water coolant loop is enabled by corresponding *H_2O LOOP 1* and *2 BYPASS MODE* switches on panel L1. When the switch is positioned to *AUTO*, the water bypass controller and bypass valve automatically control the amount of water in the coolant loop that bypasses the Freon/water interchanger and heat exchangers. When the bypass controller's outlet temperature is 65.5° F, the loop's bypass valve is

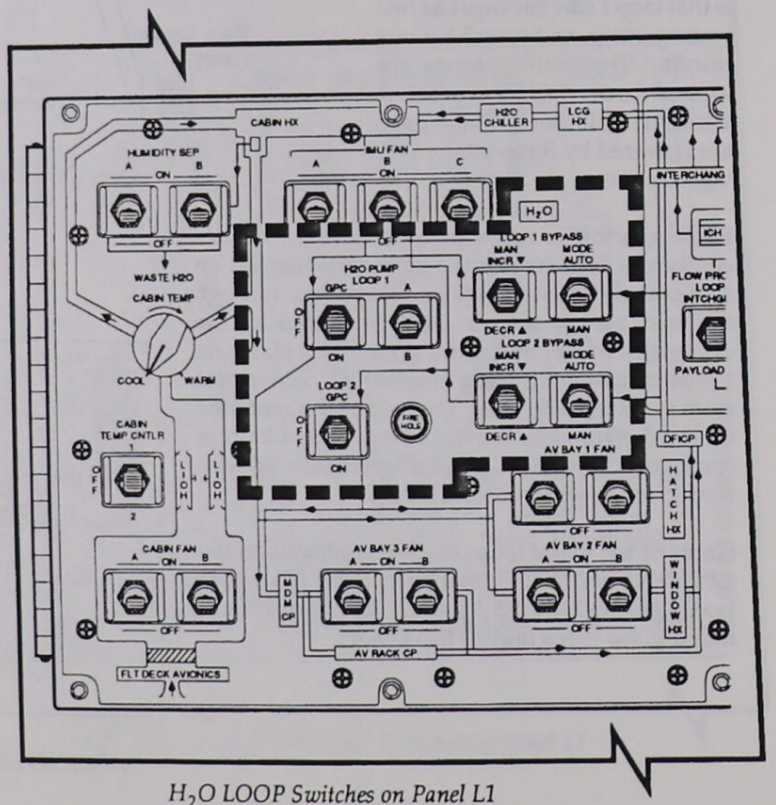

H_2O LOOP Switches on Panel L1

fully closed, and all the loop flow is directed to the Freon/water interchanger to provide maximum cooling.

When the bypass controller senses that the coolant loop water pump's outlet temperature is 60.5° F, the controller bypasses a maximum amount of water around the Freon/water interchanger, reducing the heat rejection rate and increasing the water temperature out of the pump outlet. When the *H_2O LOOP BYPASS MODE* switch for the coolant loop is positioned to *MAN*, the flight crew sets the corresponding *H_2O LOOP MAN INCR/DECR* switch on panel L1 to manually control the bypass valve in that water coolant loop.

Because of changes in heat loads from the initial design, the water bypass controllers are not able to control temperatures automatically, as originally intended. As a result, the flight crew can manually control the water bypass control valve by positioning the *H_2O LOOP BYPASS MODE* switch in *MAN* and the *H_2O LOOP BYPASS MAN INCR/DECR* switch for that water coolant loop on panel L1. The bypass valve is adjusted before launch to provide a flow of 900 to 1,000 pounds per hour through the Freon/water interchanger, and the control system remains in the manual mode for the entire flight.

The accumulator in each water coolant loop provides a positive pressure on the corresponding water pump inlet and accommodates thermal expansion and dampens pressure surges in that water coolant loop when the pump is turned on or off. Each accumulator is pressurized with gaseous nitrogen at 19 to 35 psi.

NOTE

For normal operations, only one water loop is active (usually loop 2). Running two water loops for long periods of time is undesirable. Two operating loops will flow too much water through the Freon/water interchanger and result in a significant increase in the cabin temperature. This occurs because two active water loops are capable of picking up more heat than the two Freon loops can carry away. Over time, the water loops will start to heat up, and cooling efficiency will decrease.

The pressure at the outlet of the water pump in each water coolant loop is monitored and transmitted to the H_2O PUMP OUT PRESS meter on panel O1. The appropriate loop is selected by the switch below the meter. When the switch is positioned to *LOOP 1* or *LOOP 2*, the corresponding water coolant loop's pressure in psia is monitored on the meter.

The yellow *H_2O LOOP* caution and warning light on panel F7 will be illuminated if the outlet pressure of the water coolant loop 1 pump is less than 19.5 psia or greater than 79.5 psia, or if the outlet pressure of the loop 2 pump is less than 45 psia or greater than 81 psia. The pump inlet and outlet pressure of each coolant loop are monitored and transmitted to the systems management GPC for CRT readout on the DISP 88 APU/ENVIRON THERM display (PUMP OUT P).

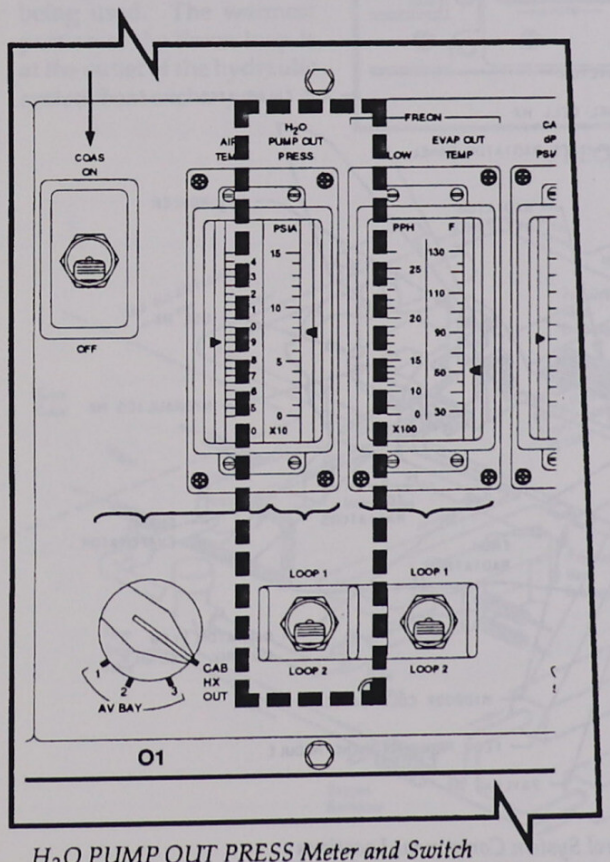

H_2O PUMP OUT PRESS Meter and Switch on Panel O1 (The same transducer feeds SM DISP 88)

Active Thermal Control System

The active thermal control system provides orbiter heat rejection during all phases of the mission. The system consists of two complete, identical Freon coolant loop systems, cold plate networks for cooling avionics units, liquid/liquid heat exchangers, and three heat sink systems: radiators, flash evaporator, and ammonia boiler.

Freon Loops

Two Freon coolant loops transport excess heat from the fuel cell heat exchangers, payload heat, and midbody and aft avionics electronic units. The Freon loops also warm the hydraulic systems on orbit and deliver heat to the heat sinks. Each loop has a pump package consisting of two pumps and an accumulator. The pump package is located in the midbody of the orbiter below the payload bay liner. One pump in each loop is active at all times. The metal bellows-type accumulator in each loop is pressurized with gaseous nitrogen to provide a positive suction pressure on the pumps and permit thermal expansion in that coolant loop. When the accumulator bellows is fully extended, approximately 80 lb of Freon are in the accumulator (normally only 20 to 30 percent of this amount is used). A ball check valve downstream of the pumps in each coolant loop prevents a reverse flow through the non-operating pump in the loops. The pumps in each coolant loop are controlled individually by the *FREON PUMP* switches on panel L1. When either switch is positioned to *A* or *B*, the corresponding Freon pump in that loop operates. The *OFF* position of each switch prohibits either Freon pump in that coolant loop from operating.

When a Freon pump is operating, Freon is routed in parallel through the three fuel cell heat exchangers and the midbody cold plate network to cool electronic avionics units. The Freon coolant reunites in a series flow path before entering the hydraulics heat exchanger. It then extracts energy from the

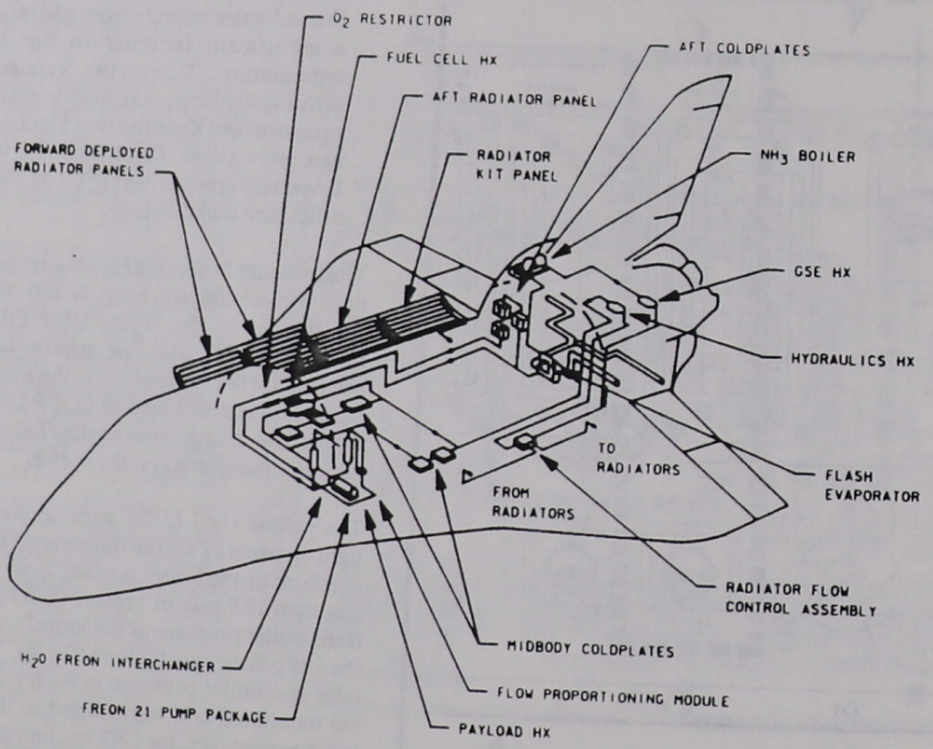

Active Thermal Control System Component Locations

Freon coolant loop to heat hydraulic system fluid during on-orbit hydraulic thermal-conditioning operations.

During the prelaunch and ascent phases of the mission and during the atmospheric flight portion of entry through landing and rollout, the hydraulic system heat exchanger transfers excess heat from the hydraulic systems to the Freon loops. The Freon flows from the hydraulic fluid heat exchanger to the radiators, which are bypassed through a bypass valve during ascent and entry unless cold soak cooling from the radiators is being used. The warmest portion of the Freon loop is at the outlet of the hydraulic system heat exchanger.

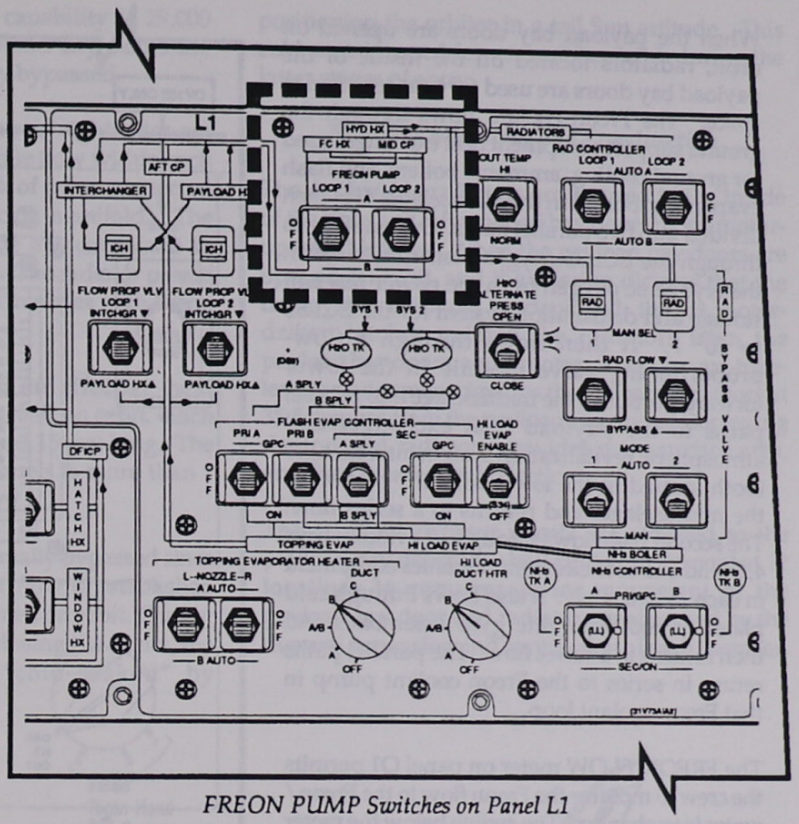

FREON PUMP Switches on Panel L1

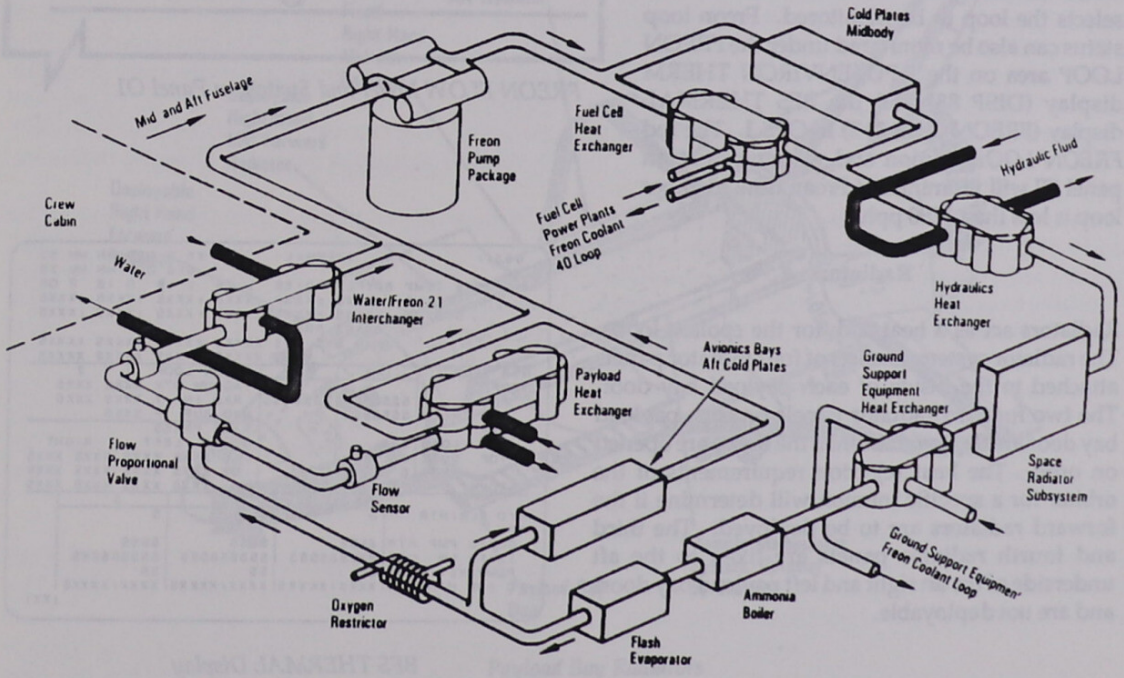

Freon Coolant Loop

When the payload bay doors are opened on orbit, radiators located on the inside of the payload bay doors are used for heat rejection to space. The Freon coolant flows through the ground support equipment heat exchanger used for ground cooling, ammonia boilers, and flash evaporator located in the aft fuselage. It is then divided into two parallel paths. One path flows through the ECLSS oxygen restrictor to warm the cryogenic oxygen from the power reactant storage and distribution system for the ECLSS to 40° F. It then flows through a flow-proportioning valve module in the lower forward portion of the midfuselage into parallel paths to the payload heat exchanger and atmospheric revitalization system interchanger (both located in the lower forward portion of the midfuselage) and returns to a series flow. The second path flows through aft avionics bays 4, 5, and 6 to cool electronic avionics equipment in each avionics bay. It also flows through cold plates to cool four rate gyro assemblies and then returns to a series flow. The parallel paths return in series to the Freon coolant pump in that Freon coolant loop.

The FREON FLOW meter on panel O1 permits the crew to monitor the Freon flow to the Freon/water interchanger. The switch below the meter selects the loop to be monitored. Freon loop status can also be monitored under the FREON LOOP area on the APU/ENVIRON THERM display (DISP 88) and the BFS THERMAL display (FREON Loop 1, 2) in OPS 1. The red *FREON LOOP* caution and warning light on panel F7 will illuminate if Freon flow in either loop is less than 1200 pph.

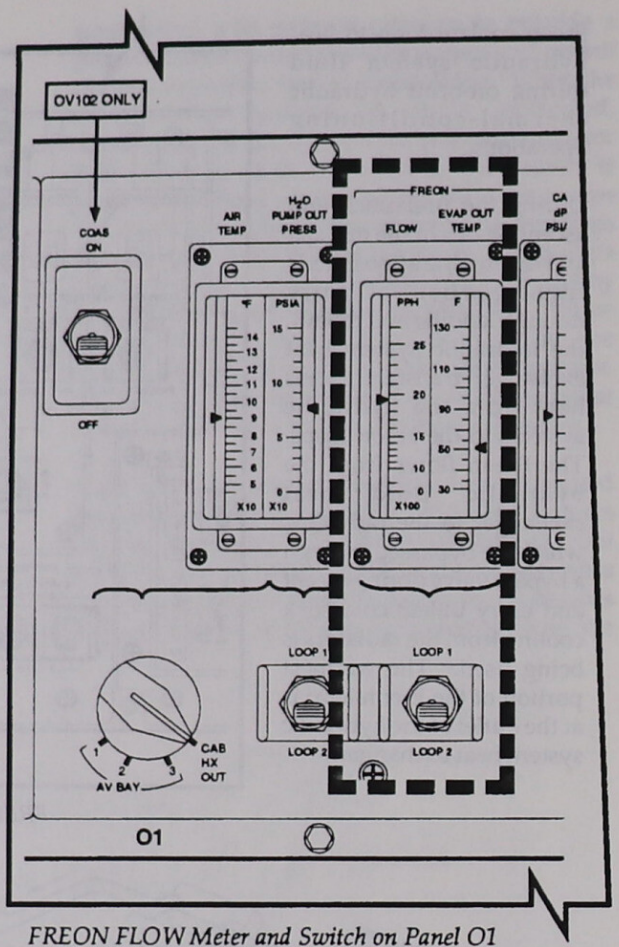

FREON FLOW Meter and Switch on Panel O1

Radiators

Radiators act as a heat sink for the coolant loops. The radiator system consists of four radiator panels attached to the inside of each payload bay door. The two forward radiator panels on each payload bay door are deployable when the doors are opened on orbit. The heat rejection requirements of the orbiter for a specific mission will determine if the forward radiators are to be deployed. The third and fourth radiator panels are fixed to the aft underside of the aft right and left payload bay doors and are not deployable.

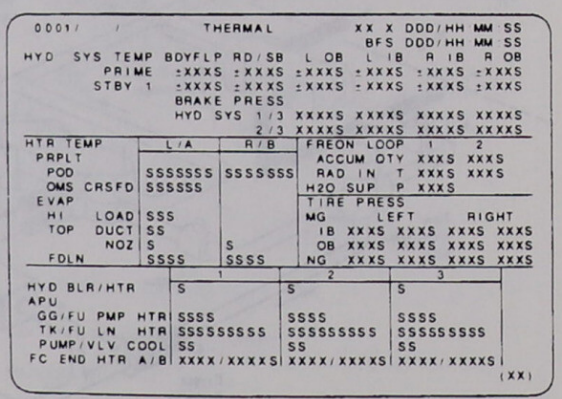

BFS THERMAL Display

The maximum heat rejection capability is 29,000 Btu per hour. When the payload bay doors are closed, the radiators are usually bypassed.

The radiator panels on the left and right sides are configured to flow in series, while flow within each panel is parallel through a bank of tubes connected by an inlet and outlet connector manifold. The radiator panels on the left side are connected in series with Freon coolant loop 1. The radiator panels on the right side are connected in series with Freon coolant loop 2.

The radiator panels provide an effective heat dissipation area of 1,195 square feet on orbit. Each radiator panel is 10 feet wide and 15 feet long. The Freon tubing in the radiator panels is more than 1 mile long.

For ascent, the radiators are normally bypassed since the doors are closed. Radiator flow is established shortly before the doors are opened on orbit. During deorbit preparations, prior to closing the doors, the Freon in the radiators is "cold-soaked" by positioning the orbiter in a tail Sun attitude. This cold soak is saved for use as a heat sink during the latter stages of entry.

Radiator Mounting and Construction

The deployable radiators are secured to the inside of the right and left payload bay doors by six motor-operated latches. When the payload bay doors are opened on orbit, and the mission dictates that the deployable radiators be deployed, the six motor-driven latches unlatch the radiators from the payload bay doors, and a motor-driven torque-tube-lever arrangement deploys the forward radiators at 35.5 degrees from the payload bay doors. Deploying the forward radiators provides more surface area, and thus greater heat rejection.

The aft fixed radiator panels are attached to the payload bay doors by a ball joint arrangement at 12 locations to compensate for movement of the payload bay door and radiator panel caused by the thermal expansion and contraction of each member.

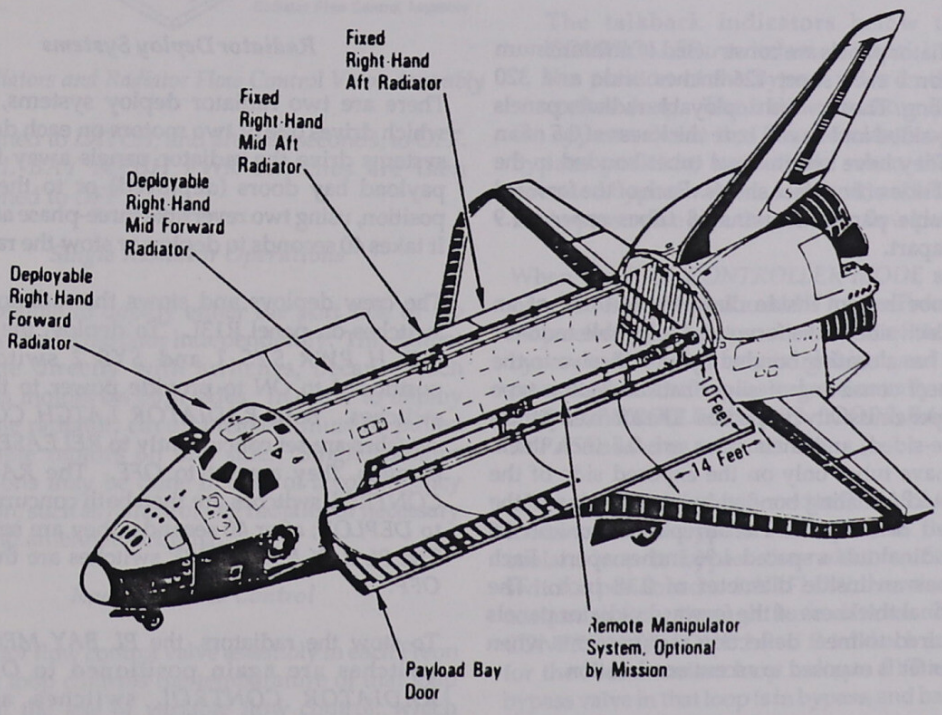

Payload Bay Radiators

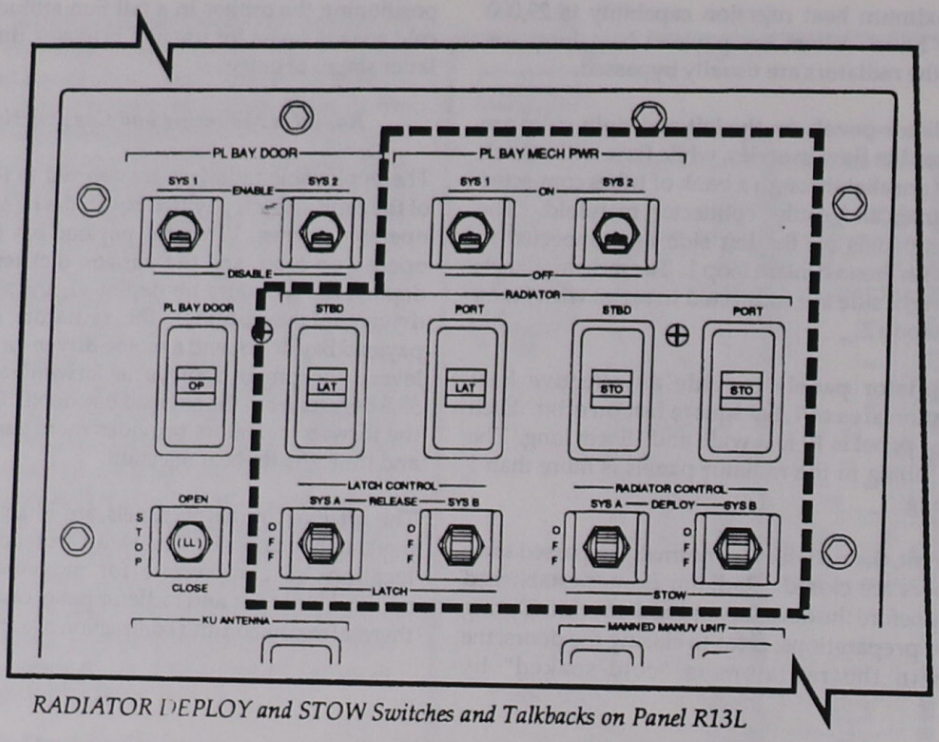

RADIATOR DEPLOY and STOW Switches and Talkbacks on Panel R13L

The radiator panels are constructed of an aluminum honeycomb face sheet 126 inches wide and 320 inches long. The forward deployable radiator panels are two-sided and have a core thickness of 0.9 of an inch. They have longitudinal tubes bonded to the internal side of both face sheets. Each of the forward deployable panels contains 68 tubes spaced 1.9 inches apart.

Each tube has an inside diameter of 0.131 of an inch. Each side of the forward deployable radiator panels has a coating bonded by an adhesive to the face sheet consisting of silver-backed Teflon tape for proper emissivity properties. The aft fixed panels are one-sided, and their cores are 0.5 inch thick. They have tubes only on the exposed side of the panel and a coating bonded by an adhesive to the exposed face sheet. The aft panels contain 26 longitudinal tubes spaced 4.96 inches apart. Each tube has an inside diameter of 0.18 inch. The additional thickness of the forward radiator panels is required to meet deflection requirements when the orbiter is exposed to ascent acceleration.

Radiator Deploy Systems

There are two radiator deploy systems, each of which drives one of two motors on each door. The systems drive the radiator panels away from the payload bay doors (deployed) or to the stowed position, using two reversible three-phase ac motors. It takes 40 seconds to deploy or stow the radiators.

The crew deploys and stows the radiators using switches on panel R13L. To deploy, the *PL BAY MECH PWR SYS 1* and *SYS 2* switches are positioned to *ON* to provide power to the panel switches. Both *RADIATOR LATCH CONTROL* switches are set concurrently to *RELEASE*; after 25 seconds, they are set to *OFF*. The *RADIATOR CONTROL* switches are then both concurrently set to *DEPLOY*; after 40 seconds, they are set to *OFF*. The *PL BAY MECH PWR* switches are then set to *OFF*.

To stow the radiators, the *PL BAY MECH PWR* switches are again positioned to *ON*. The *RADIATOR CONTROL* switches are both concurrently set to *STOW*, and after 40 seconds to *OFF*. The *LATCH CONTROL* switches are then

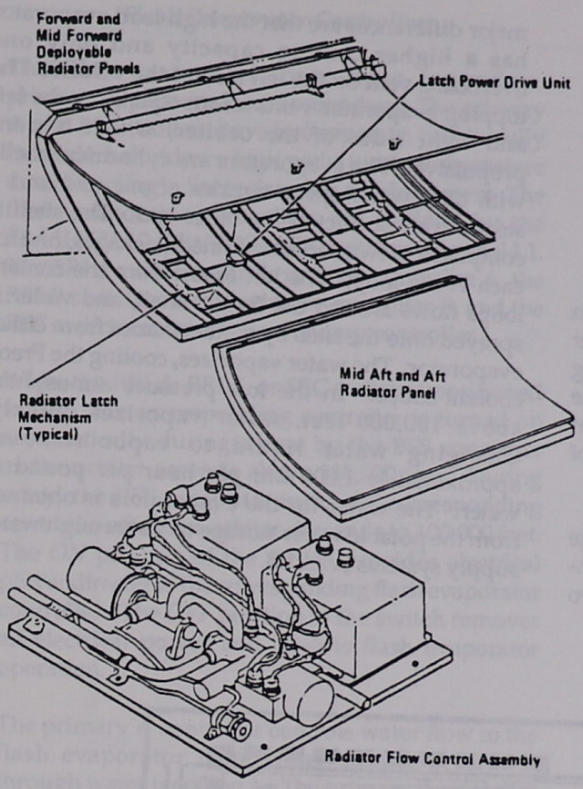

Radiators and Radiator Flow Control Valve Assembly

positioned to *LATCH*, and after 25 seconds, to *OFF*. The *PL BAY MECH PWR* switches are then positioned to *OFF*.

Single Radiator Operations

It is possible to deploy either the port side or the starboard side radiator independently. This cannot be done directly with switches, because each controls motors on both sides. In order to deploy only one radiator, circuit breakers must be pulled to disable motors on one side. Single radiator operations may be done in case of a contingency situation, such as failure of one radiator or necessary Ku-Band antennae pointing.

Radiator Flow Control

A radiator flow control valve assembly in each Freon coolant loop controls the temperature of that loop through the use of variable flow control, which mixes hot bypassed Freon coolant flow with the cold Freon coolant from the radiators. The radiator bypass valve allows Freon to either flow through the radiator or bypass the radiator completely.

In the automatic mode, the *RAD CONTROLLER LOOP 1* and *LOOP 2* switches on panel L1 are positioned to *AUTO A* or *AUTO B* to apply electrical power to the corresponding radiator flow controller assembly. The *RAD CONTROLLER MODE* switch is positioned to *AUTO*, and the *RAD CONTROLLER OUT TEMP* switch on panel L1 is positioned to *NORM* or *HI*.

With the *RAD CONTROLLER OUT TEMP* switch on panel L1 positioned to *NORM*, the radiator outlet temperature in Freon coolant loops 1 and 2 is automatically controlled at 38° F (± 2°); in *HI*, the temperature is automatically controlled at 57° F (± 2°).

NOTE

The flash evaporator is activated automatically when the radiator outlet temperature exceeds 41° F to supplement the radiators' ability to reject excess heat.

The talkback indicators below the *RAD CONTROLLER* switches on panel L1 indicate the position of the bypass valve in that Freon coolant loop. The indicators show *BYP* when the bypass valve in that Freon coolant loop is in the bypass position, barberpole when the motor-operated bypass valve is in transit, and *RAD* when the bypass valve is in the radiator flow position.

When the *RAD CONTROLLER MODE* switch on panel L1 is positioned to *MAN* for the Freon coolant loop selected, the automatic control of the radiator bypass valve in that loop is inhibited, and the flight crew controls the bypass valve manually using the *RAD CONTROLLER LOOP 1, LOOP 2, RAD FLOW/ BYPASS* switches on panel L1.

When the switch is positioned to *BYPASS*, the loop's motor-operated bypass valve permits that Freon coolant loop to bypass the radiators. When the switch is positioned to *RAD FLOW*, the valve permits coolant to flow through the radiators. The *RAD CONTROLLER LOOP 1* and *2* talkback indicators for the Freon coolant loop indicate *BYP* when the bypass valve in that loop is in bypass, and barberpole when it is in transit.

NOTE

The flow control valve cannot be controlled manually; it can only be controlled automatically using the controller. The bypass valve, however, can be operated manually or automatically.

Flash Evaporator System

The flash evaporators reject heat loads from Freon coolant loops 1 and 2 by evaporating supply water in a vacuum. The flash evaporators are used during ascent above 140,000 feet, and they supplement the radiators on orbit if required. They also reject heat loads during deorbit and entry to an altitude of approximately 100,000 feet.

The flash evaporators are located in the aft fuselage of the orbiter. There are two evaporators, a high-load evaporator and a topping evaporator. Two major differences are that the high-load evaporator has a higher cooling capacity and only one overboard vent on the left side of the vehicle. The topping evaporator vents steam equally to the left and right sides of the orbiter, which is non-propulsive. The evaporators are cylindrical shells with dual water spray nozzles at one end and a steam exhaust duct at the other end. The shell is composed of two separate finned packages, one for each Freon loop. The hot Freon from the coolant loops flows around the finned shell, and water is sprayed onto the shell by water nozzles from either evaporator. The water vaporizes, cooling the Freon coolant loops. In the low-pressure atmosphere above 100,000 feet, water vaporizes quickly. Changing water liquid to vapor removes approximately 1,000 Btu per hour per pound of water. The water for the evaporators is obtained from the potable water storage tanks through water supply systems A and B.

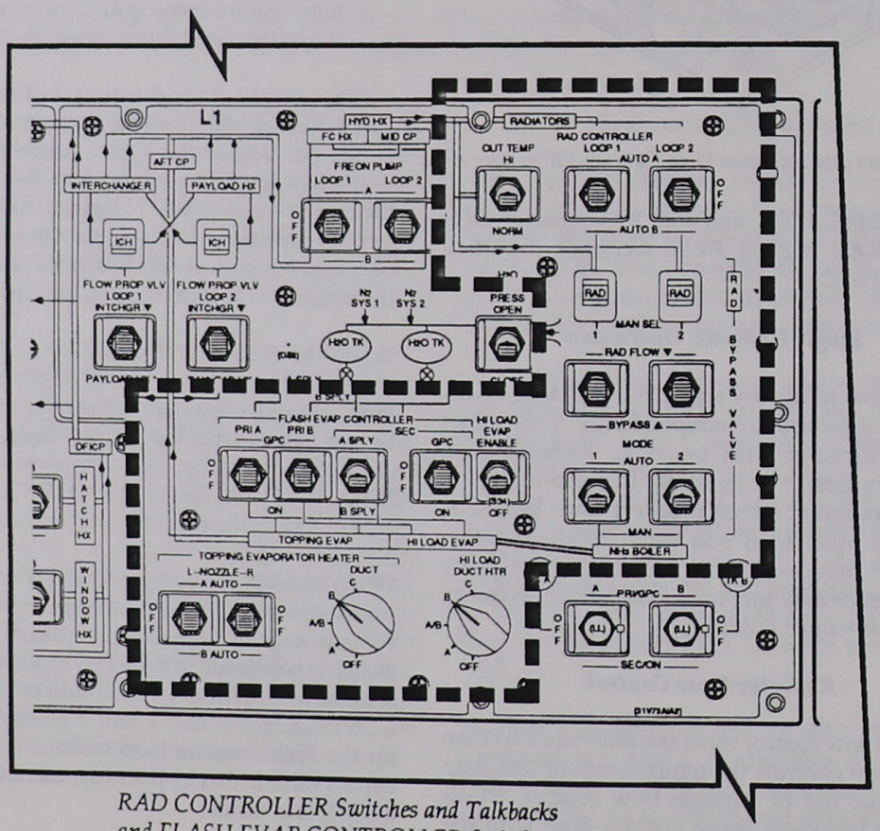

RAD CONTROLLER Switches and Talkbacks and FLASH EVAP CONTROLLER Switches on Panel L1

Flash Evaporator Controllers

The flash evaporators have three controllers: primary A, primary B, and secondary. The primary A and B controllers have two separate, functionally redundant shutdown logic paths (undertemperature rate of cooling). Secondary has no shutdown. The flash evaporator controllers are enabled by the *FLASH EVAP CONTROLLER* switches on panel L1. The *PRI A* switch controls primary controller A, the *PRI B* switch controls primary controller B, and the *SEC* switch controls the secondary controller.

When the *PRI A*, *PRI B*, or *SEC* switch is positioned to *GPC*, the corresponding controller is turned on automatically during ascent by the BFS computer as the orbiter ascends above 140,000 feet. During entry, the BFS computer turns the corresponding controller off as the orbiter descends to 100,000 feet. The *ON* position of the switch provides electrical power directly to the corresponding flash evaporator controller. The *OFF* position of the switch removes all electrical power and inhibits flash evaporator operation.

The primary A controller controls water flow to the flash evaporator from water supply system A through water feed line A. The primary B controller controls water flow to the flash evaporator from water supply system B through water feed line B.

NOTE

When a primary controller is enabled, both evaporators can be used simultaneously.

The secondary controller controls water flow to the high load flash evaporator from water supply system A through feed line A if the *FLASH EVAP CONTROLLER SEC* switch on panel L1 is in the *A SPLY* position, and if the *HI LOAD EVAP* switch is in the *ENABLE* position. If the switch is in the *B SPLY* position, and the *HI LOAD EVAP* switch is in the *ENABLE* position, the secondary controller controls water flow to the flash evaporator from water supply system B through feed line B. When the secondary controller is used, and the *HI LOAD EVAP* switch is *OFF*, both the A and B water supply systems will feed the topping evaporator in an alternate pulsing fashion. When the secondary controller is used, and the *HI LOAD EVAP* switch is in the *ENABLE* position, the topping evaporator is disabled.

The primary A and B controllers modulate the water spray in the evaporator to keep the Freon coolant loops' evaporator outlet temperature stable at 39° F. The secondary controller modulates the water spray in the evaporator to control the Freon coolant loops' evaporator outlet temperature at 62° F. The temperature sensors are located at the outlets of both evaporators.

The applicable flash evaporator controller pulses water into the evaporators, cooling the Freon. The steam generated in the topping evaporator is ejected through two sonic nozzles at opposing sides of the orbiter aft fuselage to reduce payload water vapor pollutants on orbit and to minimize venting thrust effects on the orbiter's guidance, navigation, and control system.

The high-load evaporator is used in conjunction with the topping evaporator during ascent and entry when higher Freon coolant loop temperatures impose a greater heat load that requires a higher heat rejection. The *HI LOAD EVAP* switch on panel L1 must be in the *ENABLE* position for high-load evaporator operation. After leaving the high-load evaporator, Freon flows through the topping evaporator for additional cooling. The steam generated by the high-load evaporator is ejected through a single sonic nozzle on the left side of the orbiter aft fuselage. The high-load evaporator would not normally be used on orbit because it has a propulsive vent and might pollute a payload.

NOTE

Norm jets are required to control vehicle attitude when the FES high load is used on orbit.

FES Auto Shutdown

Each primary controller has an automatic shutdown capability to protect the evaporator from over- or undertemperature conditions. The evaporator's outlet temperature is monitored to determine whether a thermal shutdown of the evaporator is warranted. If the evaporator outlet temperature goes below 37° F for 20 seconds or more, an undertemperature shutdown of the evaporator occurs. If the evaporator outlet temperature is greater than 41° F for 40 seconds, an overtemperature shutdown of the evaporator

occurs. If the evaporator is shut down, electrical power to the affected controller must be recycled to reenable operations.

Temperature Monitoring

The evaporator outlet temperature of Freon coolant loops 1 and 2 is transmitted to panel O1. When the switch below the FREON meter on panel O1 is positioned to *LOOP 1* or *LOOP 2*, the evaporator outlet temperature of Freon coolant loops 1 or 2 can be monitored in degrees Fahrenheit on the FREON EVAP OUT TEMP meter or on the DISP 79 SM SYS SUMM 2 display (EVAP OUT T). If the outlet temperature drops below 32.2° F or rises above 64.8° F, the red *FREON LOOP* caution and warning light on panel F7 will be illuminated. (The upper limit for ascent is 115° F.)

FES Heaters

Electrical heaters are employed on the topping and high-load flash evaporators' steam ducts to prevent freezing. The *HI LOAD DUCT HTR* rotary switch on panel L1 selects the electrical heaters. Switch positions *A* and *B* provide electrical power to the corresponding thermostatically controlled heaters on the high-load evaporator steam duct and steam duct exhaust. The *A/B* position provides electrical power to both thermostatically controlled heaters. The C position provides electrical power to both thermostatically controlled C heaters. The *OFF* position removes electrical power from all the heaters.

The *TOPPING EVAPORATOR HEATER DUCT* rotary switch on panel L1 selects the thermostatically controlled electrical heaters on the topping evaporator. Positions *A* and *B* provide electrical power to the corresponding heaters, while *A/B* provides electrical power to both A and B heaters. The C position provides power to the C heaters and part of the B heaters. The *OFF* position removes electrical power from all the heaters.

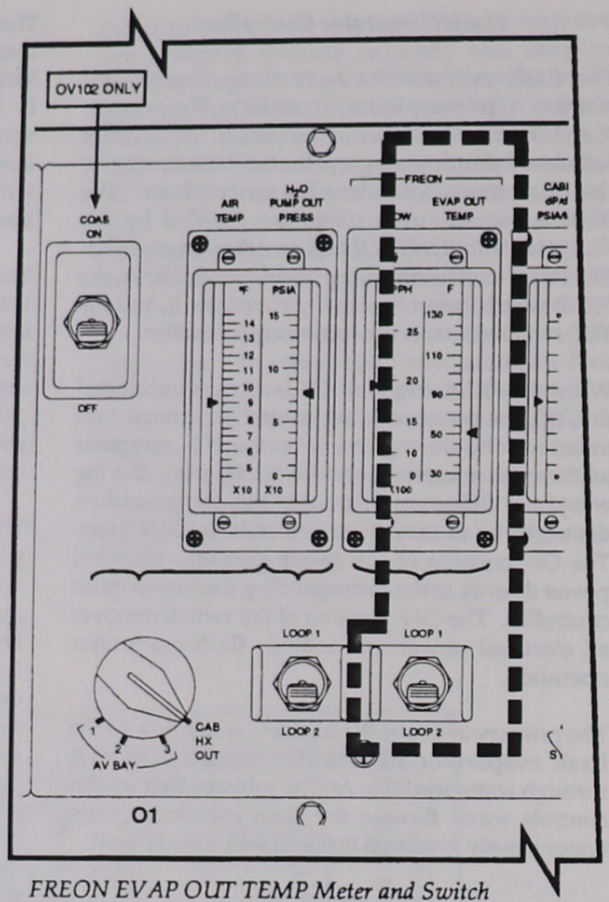

FREON EVAP OUT TEMP Meter and Switch on Panel O1

XXXX/XXX/079 SM SYS SUMM 2 XX X DDD/HH:MM:SS
BFS DDD/HH:MM:SS

		1	2	3	4	5
CRYO TK						
	H2 PRESS	XXXS	XXXS	XXXS	XXXS	XXXS
	O2 PRESS	XXXXS	XXXXS	XXXXS	XXXXS	XXXXS
HTR T1		±XXXS	±XXXS	±XXXS	±XXXS	±XXXS
	T2	±XXXS	±XXXS	±XXXS	±XXXS	±XXXS

APU		1	2	3
TEMP	EGT	XXXXS	XXXXS	XXXXS
B/U	EGT	XXXXS	XXXXS	XXXXS
OIL	IN	XXXS	XXXS	XXXS
	OUT	XXXS	XXXS	XXXS
GG	BED	XXXS	XXXS	XXXS
INJ		XXXS	XXXS	XXXS
SPEED	%	XXS	XXS	XXS
FUEL	QTY	XXXS	XXXS	XXXS
PMP LK	P	XXS	XXS	XXS
OIL OUT	P	XXXS	XXXS	XXXS
FU TK VLV				
	A T	XXXS	XXXS	XXXS
	B T	XXXS	XXXS	XXXS

AV BAY	1	2	3
TEMP	XXXS	XXXS	XXXS
FAN ΔP	X.XXS	X.XXS	X.XXS

HYD	1	2	3
PRESS	XXXXS	XXXXS	XXXXS
ACUM P	XXXXS	XXXXS	XXXXS
RSVR T	XXXS	XXXS	XXXS
QTY	XXXS	XXXS	XXXS
W/B			
H20 QTY	XXXS	XXXS	XXXS
BYP VLV	XXXS	XXXS	XXXS

THERM CNTL	1	2
H20 PUMP P	XXXS	XXXS
FREON FLOW	XXXXS	XXXXS
EVAP OUT T	XXXS	XXXS

(XX)

The SM SYS SUMM 2 display is an SM display (DISP 79) available in the BFS and in PASS SM OPS 2 and 4.

The topping evaporator's left and right nozzle heaters are controlled by the *TOPPING EVAPORATOR HEATER L NOZZLE R* switches on panel L1. When the switches are positioned to *A AUTO* or *B AUTO*, electrical power is provided to the corresponding left and right nozzle heaters, and the corresponding nozzle temperature is maintained between 40° and 70° F. The *OFF* position removes electrical power from both heater systems.

FES Water Dumps

The flash evaporator topping evaporator can be used to dump excess potable water from the potable water storage tanks, if required, on orbit. When the *RAD CONTROLLER OUT TEMP* switch on panel L1 is placed in *HI*, the radiator flow control valve assembly controls that radiator outlet at 57° F. Since the topping evaporator controls to 39° F, water is used up at a rate of about 25 lb/hr, thus dumping excess water.

Ammonia Boilers

The ammonia boiler system acts as a heat sink by using the low boiling point of ammonia to cool the Freon coolant loops when the orbiter is below 400,000 feet during entry or on the ground after landing. The resultant superheated vapor is vented overboard. Two complete, individual ammonia storage and control systems feed one common boiler containing ammonia passages and the individual Freon coolant loops 1 and 2. Each system consists of a storage tank, an isolation valve, an overboard relief valve, two control valves, a controller, three temperature sensors, and a feedline to the boiler.

The ammonia boiler is a shell-and-tube system with a single pass of ammonia on the ammonia side and two passes of each Freon coolant loop through the boiler. The ammonia flows in the ammonia tubes and the Freon coolant loop flows over the tubes, cooling the Freon coolant loops. When the ammonia flows over the warm Freon coolant lines in the boiler, it immediately vaporizes, and the heat and boiler exhaust are vented overboard in the upper aft fuselage of the orbiter next to the bottom right side of the vertical tail.

The ammonia system is normally used during entry if the radiators have not been cold-soaked. If radiator cooling is used during entry, the ammonia system is activated post-landing when radiator outlet temperatures reach 75.5° F. The ammonia boiler operations are used post-landing until a ground cooling cart is connected to the ground support equipment heat exchanger.

Storage Tanks

Each ammonia boiler storage tank contains a total of 49 pounds of ammonia, all of which may be used for cooling. Each tank is pressurized with gaseous helium at a maximum operating pressure of 550 psia. Downstream of each ammonia storage tank to the common boiler are three control valves: a normally closed isolation valve, a normally open secondary control valve, and a normally open primary control valve. A relief valve in each ammonia boiler storage system provides overpressurization protection of that ammonia storage tank.

Primary Ammonia Boiler Controller

The primary controller in the ammonia system controller energizes the ammonia system isolation valve, permitting ammonia to flow to two motor-operated controller valves. The controller also commands the primary motor-operated valve to regulate the flow to the ammonia boiler. Ammonia boiler supply systems A and B are enabled by the corresponding *NH_3 CONTROLLER* switches on panel L1. When one of the switches (usually *A*) is positioned to *PRI/GPC* before entry, it enables the GPC to control electrical power to the primary and secondary controllers within the ammonia controllers. When the orbiter descends through 100,000 feet, the backup flight system computer commands the selected ammonia system controller on.

Ammonia Boiler Control Sensors

Three temperature sensors are located on each Freon coolant loop. One sensor is associated with the primary controller and its motor-operated valve to regulate ammonia system A flow to maintain Freon coolant loop 1 and 2 temperatures at the outlet of the ammonia boiler at 34° F, ± 3° F. A second sensor is associated with the ammonia system A controller fault detection logic. If the Freon coolant loop 1 and 2 temperatures drop below 31.25° F for longer than 10 seconds, the fault detection logic automatically inhibits the primary controller, which removes power from the ammonia system A

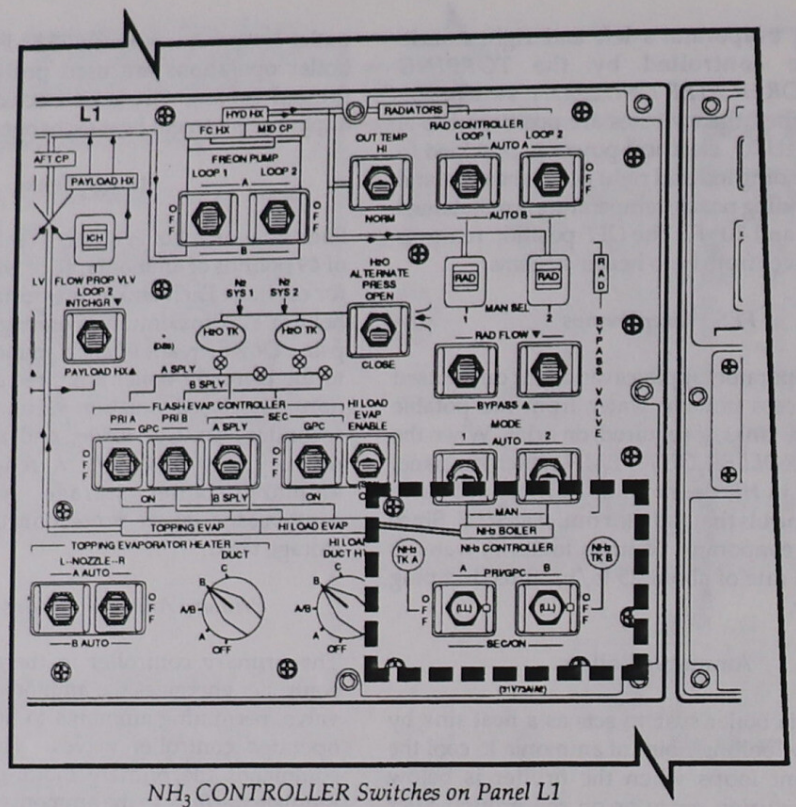

NH_3 CONTROLLER Switches on Panel L1

isolation valve and the primary control valve. The logic switches to the secondary controller in the ammonia system A controller, which energizes a redundant coil in the ammonia system supply A isolation valve and closes the secondary control valve. It commands the isolation valve to full open and allows the secondary controller to control the secondary control valve to regulate the ammonia A flow to the ammonia boiler.

The third sensor is associated with the secondary controller and secondary motor-operated valve. It regulates ammonia supply system A flow to maintain the Freon coolant loop 1 and 2 temperatures at the outlet of the ammonia boiler at 34° F. This automatic switchover is only from the primary to the secondary.

Secondary Controller

When the *NH_3 CONTROLLER A* or *B* switch on panel L1 is positioned to *SEC/ON*, the A or B ammonia system controller is electrically powered and enabled directly (no computer command is required). The primary controller in the ammonia system controller energizes the system's isolation valve open, permitting ammonia to flow to two motor-operated controller valves. The primary controller commands the secondary controller's motor-operated valve to the open position and the primary controller's motor-operated valve to regulate the ammonia flow to the ammonia boiler. The three temperature sensors on each Freon coolant loop operate and control Freon coolant loop 1 and 2 temperature in the same manner as in the *PRI/GPC* mode. Fault detection logic does not exist in the secondary controller.

The *OFF* position of the *NH_3 CONTROLLER* switches removes all electrical power from the ammonia system controller, rendering the ammonia system inoperative.

Supply and Waste Water Systems

The supply water system provides water for flash evaporator system cooling, crew consumption, and hygiene. The supply water system stores water generated by the fuel cells, and the waste water system stores waste from the crew cabin humidity separator and from the flight crew. Four supply water tanks and one waste water tank are located beneath the crew compartment middeck floor.

Data on the supply and waste water system can be monitored on the ENVIRONMENT display (DISP 66) under H2O SUPPLY and WASTE items and on the BFS THERMAL display ($H_2$0 SUP P).

Supply Water System

The supply water system consists of four water tanks that are pressurized with nitrogen from the pressure control system. Each of the four potable water tanks has a usable capacity of 168 pounds, is 35.5 inches in length and 15.5 inches in diameter, and weighs 39.5 pounds dry.

The three fuel cells generate a maximum of 25 pounds of potable water per hour (about 0.81 pound of water per kilowatt hour). The product water from all three fuel cells flows to a single water relief control panel. The water can be directed to potable water tank A or to the fuel cell water relief nozzle. Normally, the water is directed to water tank A.

The product water lines from all three fuel cells were modified to incorporate a parallel (redundant) path of product water to potable water tank B in the event of a blockage of the primary water path to the tanks. If such a blockage were to occur, pressure would build up and relieve through the redundant paths to potable water tank B.

Instrumentation

Temperature sensors are installed on each of the redundant paths; in addition, a pressure sensor is transmitted to telemetry and can be monitored on the BFS THERMAL display. A pH sensor is located at the common product water outlet of the water relief panel. It provides a redundant measurement of fuel cell health and water purity. A single measurement of water purity in each fuel cell is also provided. If a single fuel cell pH sensor indicated high, the flight crew would be required to sample the potable water to verify the proper pH.

Hydrogen Separators

The hydrogen-enriched water from the fuel cells flows through the single water relief panel through two hydrogen separators to potable water tank A. The separator removes 85 percent of the excess hydrogen. The hydrogen separators consist of a matrix of silver palladium tubes, which have an

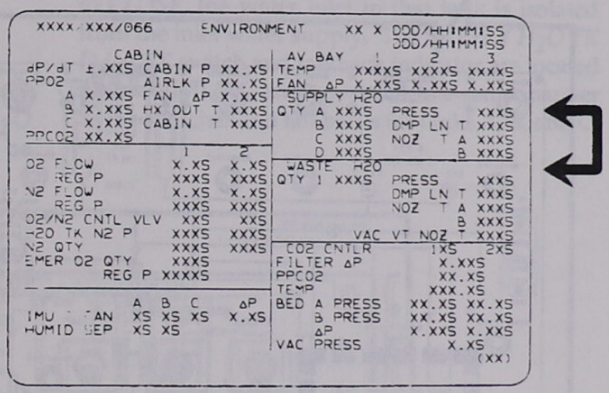

H_2O System Parameters on the ENVIRONMENT Display (DISP 66)

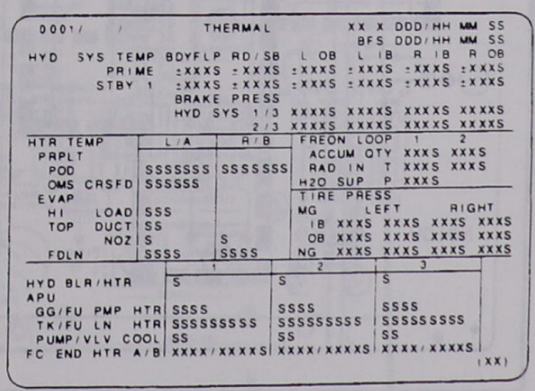

BFS THERMAL Display

affinity for hydrogen. The hydrogen is dumped overboard through a vacuum vent. The redundant water line to tank B does not pass through the hydrogen separator. Water passing through the hydrogen separators can be stored in all four potable water tanks: A, B, C, and D.

Microbial Filter

The water entering tank A, which is sterilized before launch, passes through a microbial filter that adds approximately one-half parts per million iodine to the water to prevent microbial growth. The water stored in tank A is normally used for flight crew consumption; tanks B, C, and D are used for flash evaporator cooling. The water from the microbial check valve is also directed to a galley supply valve.

If the water tank A inlet valve is closed, or tank A is full, water is directed to tank B through a 1.5 psid check valve where it branches off to tank B. If the tank B inlet valve is closed, or tank B is full of water, the water is directed through another 1.5 psid check valve to the inlets to tanks C and D.

Each potable water tank has an inlet and outlet valve that can be opened or closed selectively to use water; however, the tank A outlet valve normally remains closed to isolate the treated water from the untreated water in the other tank.

Tank Pressurization

Each potable water and waste water tank is pressurized with gaseous nitrogen from the crew compartment nitrogen supply system. The nitrogen and water are separated by a metal bellows. Nitrogen supply systems 1 and 2 can be used individually to pressurize the water tanks with nitrogen at 15.5 to 17.0 psig. Nitrogen supply system 1 is controlled by the *H_2O TK N_2 REG INLET* and *H_2O TK N_2 ISOL SYS 1* manual valves on panel MO10W. Nitrogen supply system 2 is controlled by the *SYS 2* manual valves on panel MO10W. The regulator in each nitrogen supply system controls the nitrogen pressure to the tanks at 15.5 to 17 psig, and a relief valve in each nitrogen supply system will relieve into the crew cabin if the nitrogen supply increases to 18.5 ± 1.5 psig, to protect the tanks from overpressurization.

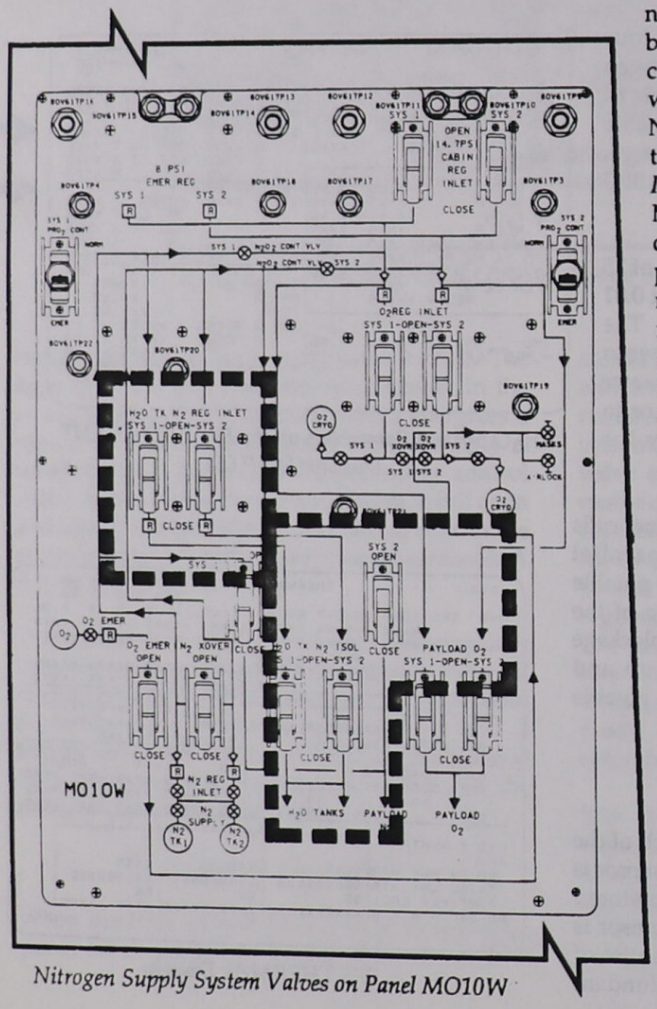
MO10W
OPEN
14.7PS CABIN REG INLET
CLOSE
8 PSI EMER REG
SYS 1
SYS 2
CLOSE
CLOSE
CLOSE

Tank Depressurization

All the tanks can be vented to cabin pressure, but tank A is normally depressed for ascents, as described here. For only tank A, inlet nitrogen pressure is controlled by the *SPLY H_2O GN_2 TK A SPLY* and *TK VENT* manual valves on panel ML26C. When the tank A supply valve is closed, the tank is isolated from the nitrogen supply. When the tank A valve is opened, the tank is pressurized by the crew cabin atmosphere. For launch, the tank A supply valve is closed, and the tank vent is opened, which lowers tank A pressure. The fuel cell water head pressure is lower to help prevent flooding of the fuel cells during ascent. On orbit, the tank A supply valve is opened, and the tank A vent to the cabin is closed, allowing nitrogen supply pressure to tank A.

Alternate Water Pressurization

If neither nitrogen supply system 1 nor 2 can be used to pressurize the water tanks, the *H_2O ALTERNATE PRESS* switch on panel L1 can be positioned to *OPEN*, which would apply the crew cabin pressure to the water tanks. Normally, this switch is positioned to *CLOSE* to isolate the cabin pressurization system from the water tank pressurization system.

Supply Water Tank Inlet Valves

Potable water tank A, B, and C valves are controlled from panel R12L, and tank D valves are controlled from panel ML31C. When the *SUPPLY H2O TK A INLET, TK B INLET,* or *TK C INLET* switch on panel R12L is positioned to *OPEN*, the inlet valve for the tank permits water into that tank. A talkback indicator above the corresponding switch indicates *OP* when the corresponding valve is open, barberpole when the valve is in transit, and *CL* when that valve is closed. When the switch is positioned to *CLOSE*, the water inlet to that tank is isolated from the inlet water supply. The *SUPPLY H_2O TK D INLET* switch and talkback indicator are located on panel ML31C and operate in the same manner as the switches and talkbacks for tanks A, B, and C.

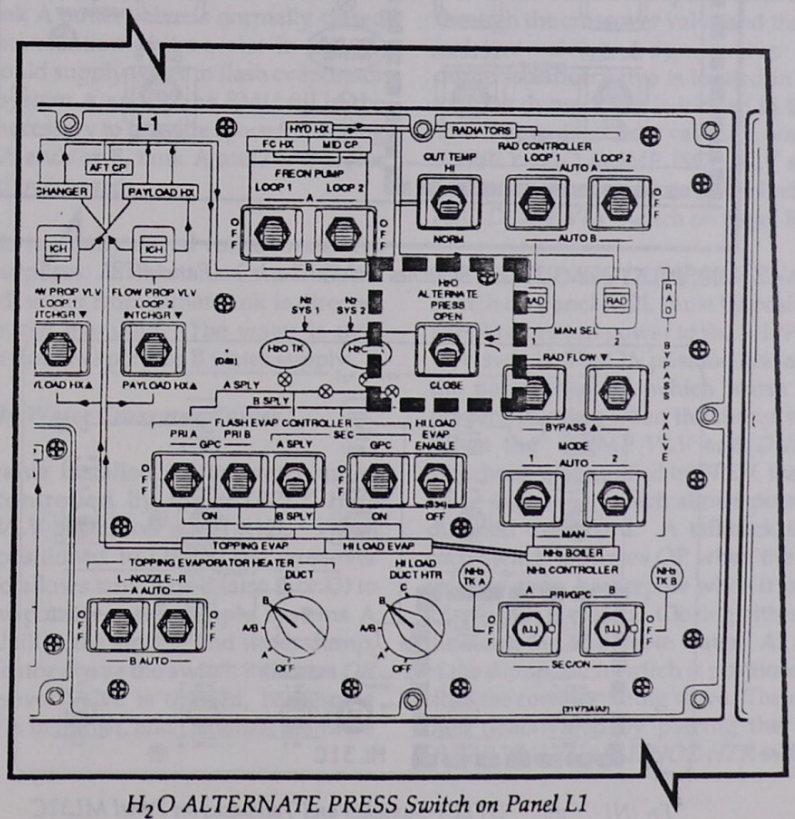

H_2O ALTERNATE PRESS Switch on Panel L1

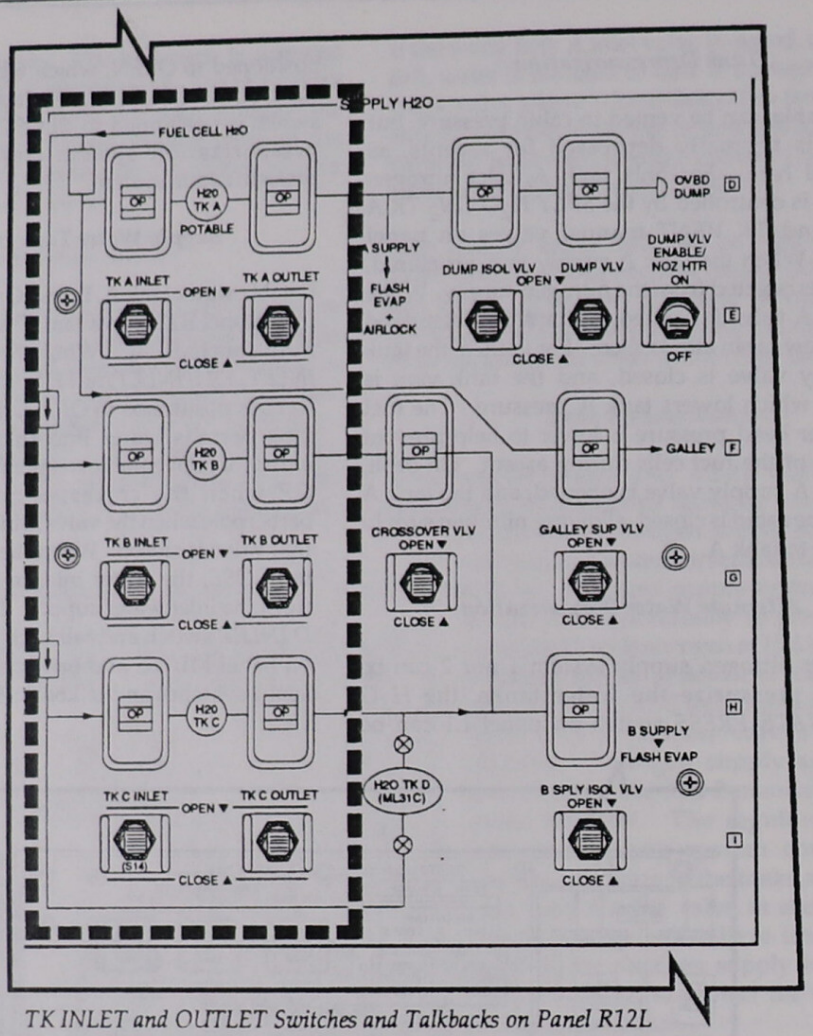

TK INLET and OUTLET Switches and Talkbacks on Panel R12L

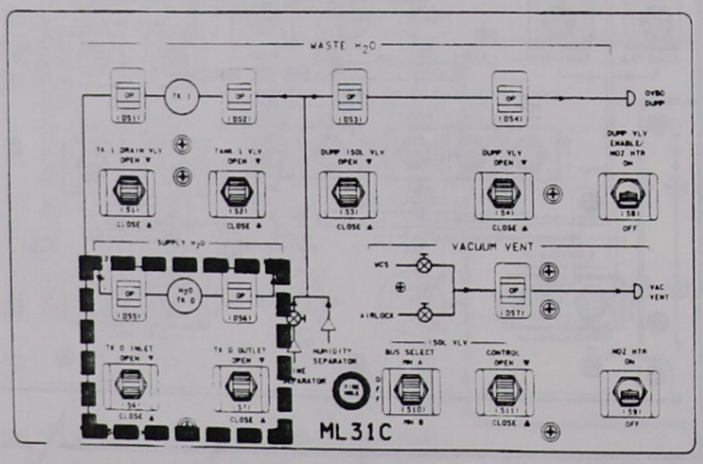

TK INLET and OUTLET Switches and Talkbacks on Panel ML31C

Tank Outlet Valves

Positioning the *SUPPLY H2O TK A, B,* or *C OUTLET* switch on panel R12L to *OPEN* permits water from the corresponding tank to flow from the tank into the water outlet manifold due to the tank nitrogen pressurization system. A talkback indicator above the switch would indicate *OP* when that valve is open, barberpole when it is in transit, and *CL* when it is closed. The *CLOSE* position of each switch isolates that water tank from the water outlet manifold. The *SUPPLY H_2O TK D OUTLET* switch and talkback indicator are located on panel ML31C and operate in the same manner as the tank A, B, and C switches and talkback indicators on panel R12L.

If the potable water tank B outlet valve is opened (normally tank A is used only for crew consumption), water from the corresponding tank is directed to the water outlet manifold. The tank A and B water is then available to the extravehicular mobility unit fill in the airlock, to the flash evaporator water supply system A, and to the water dump. The tank A outlet valve is normally closed to prevent contamination of the water in tank A. Thus, tank B would supply water to flash evaporator water supply system A and to the EMU fill in the airlock. If it is necessary to provide space for storing water in tank A and/or B, tank A and/or B water can be dumped overboard.

Tank C or D is normally saved full of water for contingency purposes. If the tank C or D outlet valve is opened, water from either tank is directed to the water outlet manifold. The water is then available to the flash evaporator B water supply.

Supply Water Crossover Valves

A crossover valve installed in the water outlet manifold is controlled by the *SUPPLY H2O CROSSOVER VLV* switch on panel R12L. When the switch is positioned to *OPEN*, the crossover valve opens and allows tank A or B (also C or D) to supply flash evaporator water supply systems A and B, the EMU fill in the airlock, and water dump. A talkback indicator above the switch indicates *OP* when the crossover valve is opened, barberpole when the valve is in transit, and *CL* when the valve is closed. The *CLOSE* position isolates the water manifold between the tank A and B outlets and the tank C and D outlets.

Supply Isolation Valve

Water from supply system A is routed directly to the flash evaporator. Water from system B is routed to an isolation valve in the system. The valve is controlled by the *SUPPLY H2O B SPLY ISOL VLV* switch on panel R12L. When the switch is positioned to *OPEN*, water from supply system B is directed to the flash evaporator. A talkback above the switch indicates *OP* when the valve is opened, barberpole when it is in transit, and *CL* when the valve is closed. The *CLOSE* position isolates water supply system B from the flash evaporator.

Supply Water Dumps

Potable water from all the tanks can be dumped overboard, if necessary, through a dump isolation valve and a dump valve. Potable water from tank C or D can also be dumped overboard, if necessary, through the crossover valve and through the dump isolation valve and dump valve. The overboard dump isolation valve is located in the crew cabin, and the dump valve is located in the midfuselage. The dump isolation valve is controlled by the *SUPPLY H2O DUMP ISOL VLV* switch on panel R12L. The dump valve is controlled by the *SUPPLY H2O DUMP VLV* switch on panel R12L.

The *SUPPLY H2O DUMP VLV ENABLE/NOZ HTR* switch on panel R12L must be positioned to *ON* to supply electrical power to the *SUPPLY H2O DUMP VLV* switch. The *ON* position also applies power to the nozzle heaters, which warm the nozzles to prevent freezing when the dump valve is opened. When the *DUMP VLV* and *DUMP ISOL VLV* switches are positioned to *OPEN*, the corresponding valve is opened, which allows potable water to be dumped overboard. A talkback indicator above each switch indicates *OP* when the corresponding valve is open, barberpole when it is in transit, and *CL* when it is closed. Closing either valve inhibits the dumping of potable water. At the completion of the dump, each switch is positioned to *CLOSE* to close the corresponding valve. The nozzle heater is then deactivated by placing the *SUPPLY H2O DUMP VLV ENABLE/NOZ HTR* switch to *OFF*.

Contingency Crosstie

A contingency crosstie valve in the supply water overboard dump line between the dump isolation valve and dump valve permits the joining of the waste water system through a flexible hose to the supply water system for emergency dumping of waste water through the supply water dump or the use of waste water for the flash evaporators.

Dump Nozzle Heaters

The potable supply water dump nozzle employs a heater to prevent freezing of the supply water dump nozzle at the midfuselage. The dump nozzle heater is powered when the *SUPPLY H2O DUMP VLV ENABLE/NOZ HTR* switch on panel R12L is positioned to *ON*. When the switch is positioned to *OFF*, it removes electrical power from the nozzle heater, as well as the *SUPPLY H2O DUMP VLV* switch, which causes the dump valve to close.

The potable supply water line upstream of the water dump nozzle has electrical heaters on the line to prevent supply water from freezing. The A and B heaters on the line are thermostatically controlled and are powered by the *H_2O LINE HTR A* and *B* circuit breakers on panel ML86B. (These circuit

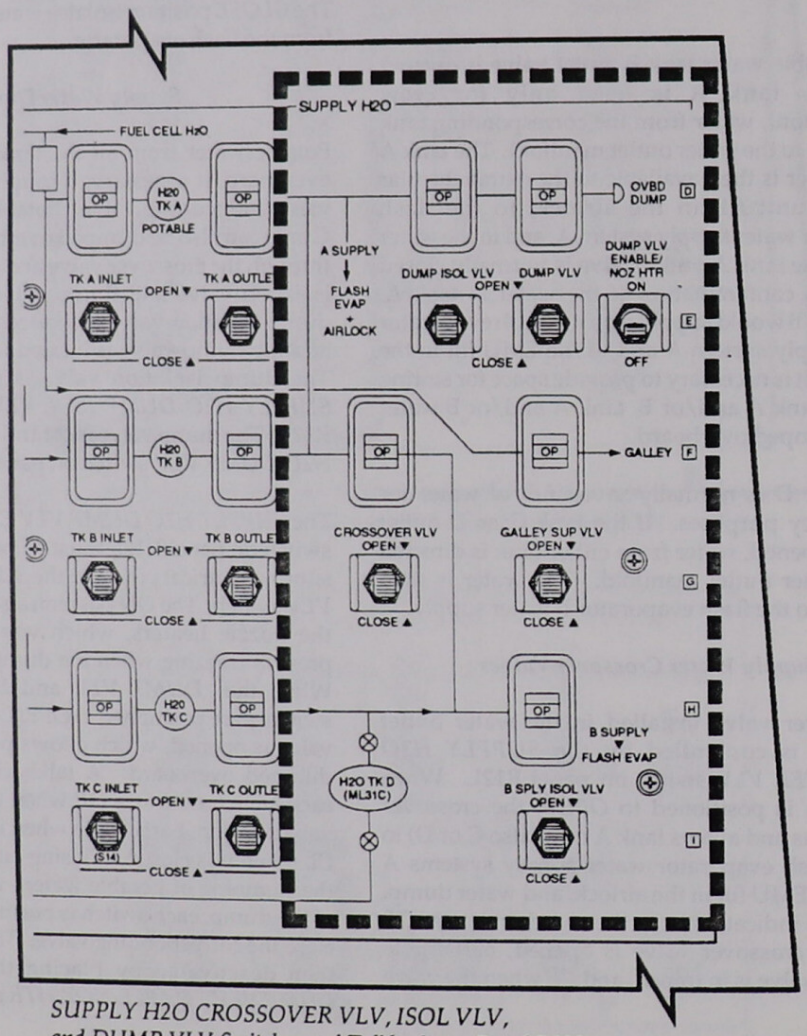

SUPPLY H2O CROSSOVER VLV, ISOL VLV, and DUMP VLV Switches and Talkbacks on Panel R12L

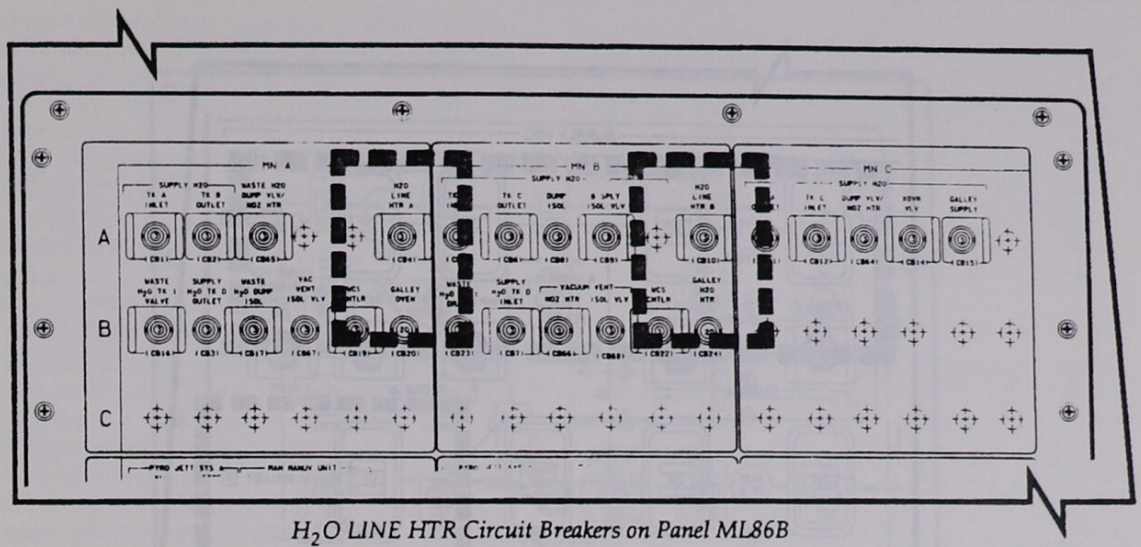

H_2O LINE HTR Circuit Breakers on Panel ML86B

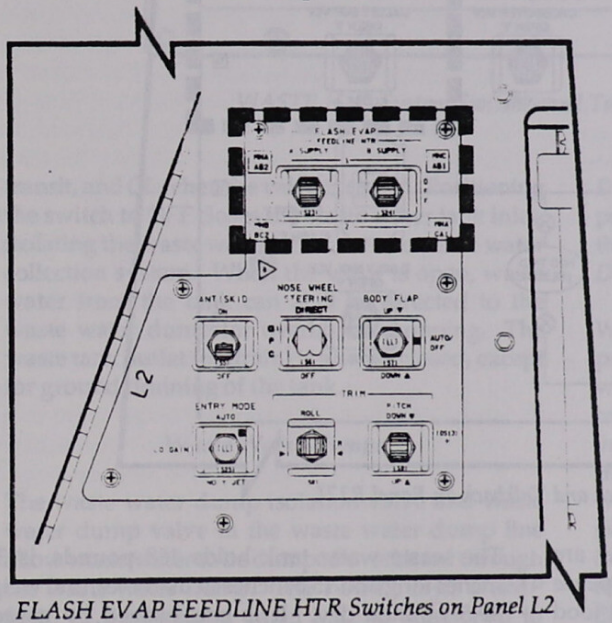

FLASH EVAP FEEDLINE HTR Switches on Panel L2

breakers also provide power to thermostatically controlled heaters on the waste water line and the waste collection system vacuum vent line.)

The potable supply water feed lines to the flash evaporators are approximately 100 feet long. To prevent the water in the lines from freezing, redundant heaters are installed along the length of the water lines. The heaters are controlled by the *FLASH EVAP FEEDLINE HTR A SUPPLY* and *B SUPPLY* switches on panel L2. When a switch is positioned to *1*, it enables the thermostatically controlled heaters on the corresponding supply line to automatically control the temperature on that line. When a switch is positioned to 2, it enables another thermostatically controlled heater system on the corresponding supply line. The *OFF* position of each switch inhibits heater operation on the corresponding supply line.

Galley Water Supply

The galley supply valve in the supply water line from the microbial filter or tank A permits or isolates the supply water from the galley or water dispenser. When the *SUPPLY H2O GALLEY SUP VLV* switch on panel R12L is positioned to *OPEN*, supply water is routed through parallel paths: one path flows through the atmospheric revitalization system water coolant loop water chiller to cool the supply water, and the other path bypasses the water chiller with ambient water. A talkback indicator above the switch indicates *OP* when the valve is open, barberpole when the valve is in transit, and *CL* when the valve is closed. The *CLOSE* position of the switch isolates the potable supply water from the middeck ECLSS supply water panel.

If the galley is installed in the middeck of the crew cabin, the water supply is directed to the galley. If a payload is installed in the middeck in lieu of the

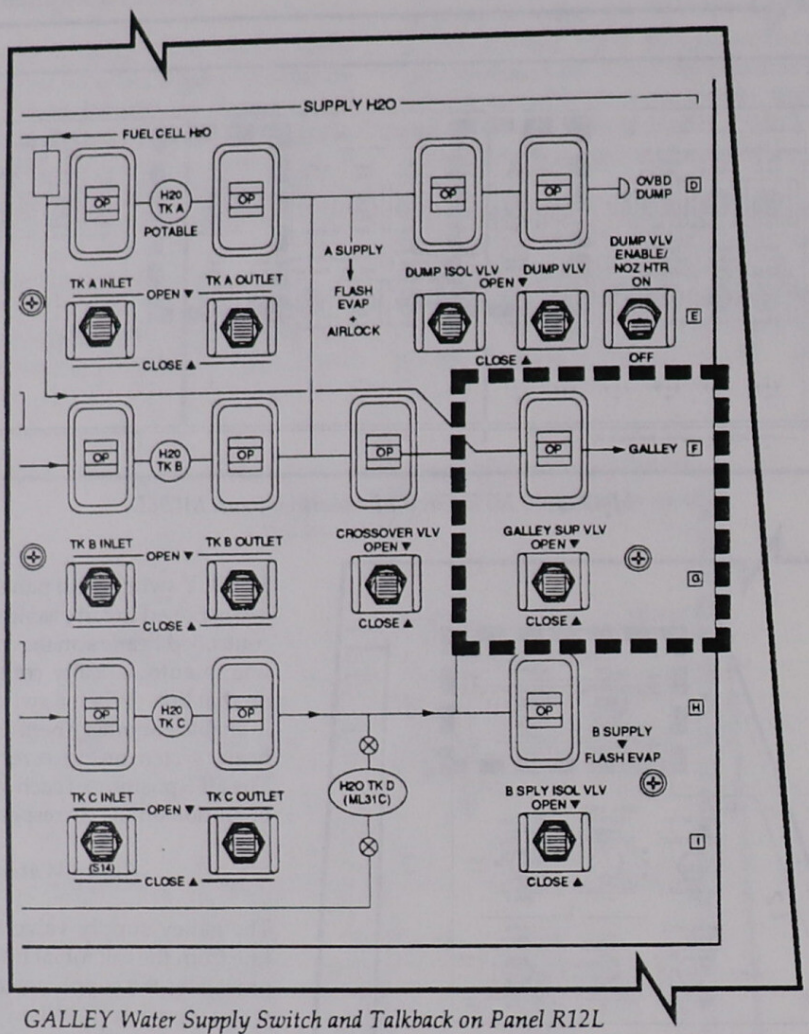

GALLEY Water Supply Switch and Talkback on Panel R12L

galley, the chilled water and ambient water are connected to an Apollo water dispenser to dispense ambient and chilled water for drinking and food reconstitution.

Waste Water System

A single waste water tank receives waste water from the humidity separator and the waste management system. The tank is located beneath the crew compartment middeck floor next to the potable water tanks.

The waste water tank holds 168 pounds, is 35.5 inches long and 15.5 inches in diameter, and weighs 39.5 pounds dry. It is pressurized by gaseous nitrogen from the same source as the potable water tanks.

Waste water is directed to the waste water tank 1 inlet valve, which is controlled by the *WASTE H_2O TANK 1 VLV* switch on panel ML31C. When the switch is positioned to *OPEN*, waste water is directed to the waste water tank. A talkback indicator above the switch indicates *OP* when the valve is open, barberpole when the valve is in

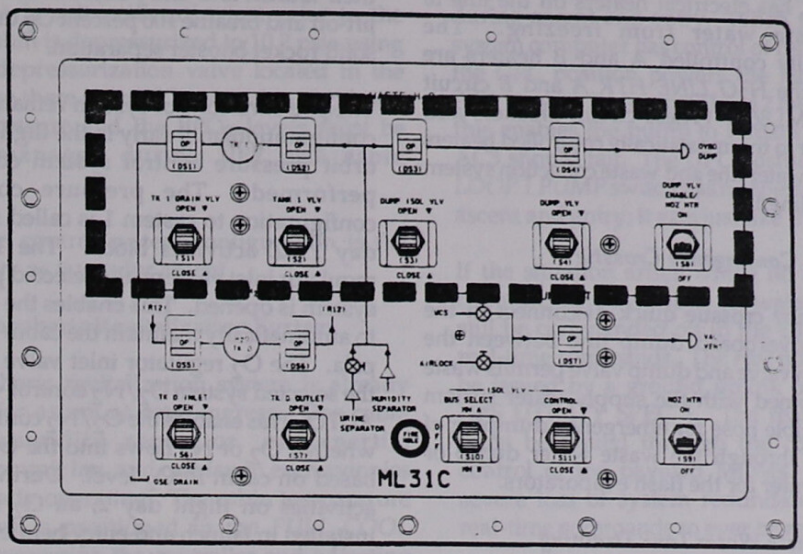

WASTE H_2O System Switches and Talkbacks on Panel ML31C

transit, and *CL* when the valve is closed. Positioning the switch to *OFF* closes the waste water tank inlet, isolating the waste water tank from the waste water collection system. When the valve is open, waste water from the tank can also be directed to the waste water dump for overboard dumping. The waste tank outlet (or drain) is always closed, except for ground draining of the tank.

Waste Water Dumps

The waste water dump isolation valve and waste water dump valve in the waste water dump line allow waste water to be dumped overboard through the waste water dump. The *WASTE H_2O DUMP ISOL VLV* switch on panel ML31C positioned to *OPEN* allows waste water to be directed to the waste water dump valve. A talkback indicator above the switch indicates *OP* when the valve is open, barberpole when the valve is in transit, and *CL* when the valve is closed.

In order for waste water to be dumped overboard, the waste water dump valve must be opened. It is controlled by the *WASTE H_2O DUMP VLV ENABLE/NOZ HTR* and *WASTE H_2O DUMP VLV* switches on panel ML31C. When the *WASTE H_2O DUMP VLV ENABLE/NOZ HTR* switch is positioned to *ON*, electrical power is supplied to the waste water dump heaters and the *WASTE H_2O DUMP VLV* switch.

When the *WASTE H_2O DUMP VLV* switch is positioned to *OPEN*, the dump valve allows waste water to be dumped overboard. A talkback indicator above the switch indicates *OP* when the valve is open, barberpole when the valve is in transit, and *CL* when the valve is closed. If waste water is dumped overboard, the *DUMP ISOL VLV* switch is positioned to *CL* upon completion of the dump. The *WASTE H_2O DUMP VLV* is positioned to *CLOSE*, and the *WASTE H_2O DUMP VLV ENABLE/NOZ HTR* switch is set to *OFF*.

CAUTION

If the *DUMP VLV ENABLE/NOZ HTR* switch is positioned to *OFF* before the *DUMP VLV* switch is positioned to *CLOSE*, the dump valve will remain open. The heaters at the waste water dump prevent waste water from freezing at the overboard dump.

The waste water dump line, upstream of the waste dump nozzle, has electrical heaters on the line to prevent waste water from freezing. The thermostatically controlled A and B heaters are powered by the *H_2O LINE HTR A* and *B* circuit breakers on ML86B. (These circuit breakers also provide power to thermostatically controlled heaters on the supply water line and waste collection system vacuum vent line.)

Contingency Crosstie

The contingency crosstie quick disconnect in the waste water overboard dump line between the dump isolation valve and dump valve permits waste water to be joined with the supply water system through a flexible hose for emergency dumping of supply water through the waste water dump or using waste water for the flash evaporators.

Waste Water Tank Draining

The waste water tank 1 drain valve controls the draining of the waste water tank during ground operations through the ground support equipment flush and drain. When the *WASTE H_2O TK 1 DRAIN VLV* switch on panel ML31C is positioned to *OPEN*, the valve permits the draining and flushing of the waste water tank. The drain line is capped during flight. A talkback indicator above the switch indicates *OP* when the valve is open, barberpole when the valve is in transit, and *CL* when the valve is closed.

Operations

Pressure Control System

For ascent, both 14.7 psia cabin regulator inlet valves are closed to isolate the 14.7 psia cabin regulators. If a cabin leak develops, this configuration conserves nitrogen by not allowing any makeup flow into the cabin until the cabin pressure drops below 8 psia. The O_2 regulator inlet valves are closed, directing all the O_2 to the O_2 crossover manifold to supply the launch and entry suit helmets. The O_2/N_2 control valve on pressure control system 1 is open to allow N_2 to pressurize the O_2/N_2 manifold. The O_2/N_2 control valve on pressure control system 2 is closed. This would normally allow oxygen to flow to the O_2/N_2 manifold, but since the oxygen regulators are closed, nothing is configured to flow through the emergency 8 psia regulators on pressure control system 2. The crew will close the visors of their launch and entry suit helmets shortly before lift-off and breathe 100 percent O_2 until shortly after solid rocket booster separation.

The pressure control system remains in the ascent configuration until early in the flight plan when the orbit pressure control system configuration is performed. The pressure control system configuration to system 1 is called for in the flight day 1 EZ activities block. The 14.7 psia cabin regulator inlet valve on the selected pressure control system is opened. This enables the cabin regulator to automatically maintain the cabin pressure at 14.7 psia. The O_2 regulator inlet valve is opened, and the selected system O_2/N_2 control valve is taken to *AUTO*. This enables the O_2/N_2 controller to control whether O_2 or N_2 flows into the O_2/N_2 manifold based on cabin PPO_2 level. During the postsleep activities on flight day 2, an O_2 bleed orifice is installed in launch and entry helmet QD-5. The O_2 bleed orifice is sized based on number of crew and compensates for the crew's metabolic O_2 usage by flowing O_2 directly into the cabin. This helps keep the PPO_2 level stable when the cabin pressure is greater than 14.7 psia and the cabin regulators are not flowing. A reconfiguration to pressure control system 2 is performed halfway through the mission.

A 10.2 psia cabin protocol was developed by the flight surgeons to minimize the risk of decompression sickness (bends) for crewmembers preparing for an EVA. The EVA crewmembers must prebreathe pure O_2 before they go EVA to help flush N_2 out of their body tissue. The following 10.2 cabin protocol options have been developed:

- Option 1
  - 60-minute initial prebreathe on launch and entry suit helmet
  - 12 hours at 10.2 psia cabin pressure
  - 75-minute final prebreathe in suit
- Option 2
  - 60-minute initial prebreathe on launch and entry suit helmet
  - 24 hours at 10.2 psia cabin pressure
  - 40-minute final prebreathe in suit
- Option 3
  - 4-hour prebreathe in suit

For scheduled EVAs, option 1 or 2 is chosen to minimize the in-suit prebreathe just prior to the EVA. The cabin is depressurized to 10.2 psia using the airlock depressurization valve located in the airlock. Since there is no 10.2 psia cabin regulator, the cabin pressure and the PPO_2 levels must be manually managed during 10.2 psia cabin operations.

The pressure control system configuration is the same for entry as it was for ascent.

Atmospheric Revitalization System

The atmospheric revitalization system is already configured for ascent at crew ingress. One cabin fan, one humidity separator, one inertial measurement unit fan, and one fan in each avionics bay are already operating. The cabin temperature control valve is positioned in the *FULL COOL* position by powering the controller and adjusting the rotary switch to the *COOL* position. Once the *FULL COOL* position is reached, cabin temperature controller 1 is unpowered. The humidity separators and the IMU fan signal conditioners are unpowered to protect against an ac to ac bus short, which could cause loss of a main engine. (The wire bundle that carries power to these signal conditioners did short on STS-6.) Water loop 2 is on, and water loop 1 is off during ascent. Both water bypass valves are positioned to flow approximately 950 lb/hr through the Freon/water interchanger. If no failures occur during ascent, then no actions are required to manage the atmospheric revitalization system.

The orbit fan and pump configuration is the same on orbit as for ascent, except water loop 1 is set to the *GPC* position. While in SM OPS 2 (or SM OPS 4), the *GPC* position enables the inactive water loop to be cycled on periodically. This periodic cycling prevents the inactive water loop from freezing in the Freon/water interchanger. The cycling sequence is initiated any time an OPS transition is made into SM OPS 2 (or SM OPS 4). When an OPS transition is made, the pump will receive a 6-minute *"ON"* command, then remain off for 3,000 minutes (50 hours). The pump will cycle on for 6 minutes every 50 hours.

The pump on water loop 2 is powered by AC3 when its switch is in the *ON* position. The *GPC* position of the *WATER PUMP LOOP 2* switch provides an alternate power source for the pump during ascent and entry. When the backup flight system computer has control of the payload MDMs, the *GPC* position powers the loop 2 pump with AC1 power. Since water loop 2 has only one pump, this enables the pump to remain powered even if AC3 should fail. The *GPC* position of the *WATER LOOP 1 PUMP* switch has no special function during ascent and entry; it acts just like the *OFF* position.

If the situation arises where no PASS SM or BFS computers are available, the water loop pumps can still be commanded on in the *GPC* position using real-time commands. The real time commands can be issued by a ground uplink or crew inputs on DPS UTILITY SPEC 1. The real-time commands must be issued through the computer that has control of the payload MDMs. It would take a severe loss of system redundancy for the use of real-time commands to ever be required.

Cooling Management

Depending on the mission phase, the Freon cooling loops are cooled four different ways. Prior to launch, cooling is provided by the ground support equipment. After lift-off, there is no active means of cooling until after solid rocket booster separation. It takes the orbiter slightly more than 2 minutes to reach an altitude where water evaporation provides effective cooling. Until that time, sufficient "thermal inertia" is in the Freon loops to limit the temperature increase so that no active heat rejection is required.

At solid rocket booster separation, the flash evaporator system receives a GPC "ON" command from the BFS and begins providing active cooling. The flash evaporator system continues to be the primary cooling source through the ascent phase and on into the post insertion timeframe. During the Post Insertion checklist procedures, flow is initiated through the radiators, the payload bay doors are opened, and the radiators become the primary source of cooling. The topping flash evaporator system may be left on to provide supplemental cooling when necessary. If the orbiter is in a warm attitude, the radiator panels may not be effective enough to provide the desired cooling. The flash evaporator system can provide the additional cooling necessary to achieve the desired Freon loop temperatures.

During the deorbit prep procedures, the radiators are "cold soaked" for use later during entry. The radiator coldsoak process stores cool Freon in the radiator panels. This is accomplished by changing the radiator control temperature from 38° to 57° F. The flash evaporator system is reactivated to cool the Freon loops from 57° to 39° F. Since less cool Freon from the radiator panels is required to achieve the 57° F RAD OUT temperature, the Freon stays in the radiator panels longer and becomes even cooler. After being in this configuration for a little over an hour, the radiators are bypassed, and the flash evaporator system begins providing all the cooling. The flash evaporator system provides the cooling during the rest of the deorbit, through entry interface, and on down to V = 12k (approximately 175,000 ft).

At V = 12k, the radiators are put through their auto startup sequence, and radiator flow is reinitiated. Below 100,000 ft, the atmospheric pressure is too high for the flash evaporator system to cool effectively. The radiator coldsoak is used as the primary source of cooling from this point through rollout.

Once the orbiter is on the ground, and the radiator coldsoak is depleted, the ammonia boilers are used as the primary cooling source until the ground support equipment cooling cart hookup is complete. Then the ammonia cooling is deactivated, and ground support equipment cooling is initiated.

For ascent aborts, the thermal management of the Freon cooling is somewhat different. The flash evaporator system still provides the cooling after solid rocket booster separation. The cooling management during the entry portion changes. The ammonia boilers provide the cooling during the lower stages of the abort entry. The ammonia is used for cooling during the entry phase of an ascent abort because the orbiter lifts off without a radiator coldsoak, and the flash evaporator system functions normally only at low atmospheric pressure (above 100,000 ft).

For a transoceanic abort landing or an abort once around, the ammonia boiler receives a GPC "ON" command from the BFS at MM 304 and 120,000 ft. For a return to launch site abort, the ammonia boiler receives a GPC "ON" command from the BFS at external tank separation (MM 602). The ammonia boiler will provide the cooling from this point through landing. The ammonia boilers can provide cooling for approximately 1 hour.

ECLSS Caution and Warning Summary

- The red *CABIN ATM* caution and warning light on panel F7 is illuminated for any of the following monitored parameters: (1) cabin pressure below 13.8 psia or above 15.2 psia, (2) PPO_2 below 2.7 psia or above 3.6 psia, (3) oxygen flow rate above 4.9 pounds per hour, and (4) nitrogen flow rate above 4.9 pounds per hour.
- The yellow *AV BAY/CABIN AIR* C/W light will illuminate for the following conditions: any avionics bay temperature higher than 130° F, the heat exchanger out temperature higher than 145° F, or cabin fan delta P below 4.2 inches of water or greater than 6.8 inches.
- The yellow *H_2O LOOP* C/W light will illuminate if the outlet pressure of water coolant loop pump 1 is less than 19.5 psia or greater than 79.5 psia, or if pump 2 pressure is less than 45 psia or greater than 81 psia.
- The red *FREON LOOP* light will illuminate if Freon flow in either coolant loop is less than 1200 pph, or if either loop's evap out temperature is less than 32.2° F or greater than 64.8° F (upper limit for ascent is 115° F.)

O_2 PRESS	H_2 PRESS	FUEL CELL REAC (R)	FUEL CELL STACK TEMP	FUEL CELL PUMP
CABIN ATM (R)	O_2 HEATER TEMP	MAIN BUS UNDERVOLT (R)	AC VOLTAGE	AC OVERLOAD
FREON LOOP (R)	AV BAY CABIN AIR	IMU	FWD RCS (R)	RCS JET
H_2O LOOP	RGA/ACCEL	AIR DATA	LEFT RCS (R)	RIGHT RCS (R)
———	LEFT RHC (R)	RIGHT/AFT RHC (R)	LEFT OMS (R)	RIGHT OMS (R)
PAYLOAD WARNING (R)	GPC	FCS SATURATION (R)	OMS KIT	OMS TVC (R)
PAYLOAD CAUTION	PRIMARY C/W	FCS CHANNEL	MPS (R)	———
BACKUP C/W ALARM (R)	APU TEMP	APU OVERSPEED	APU UNDERSPEED	HYD PRESS

ECLSS Caution and Warning Lights on Panel F7

ECLSS Summary Data

- The functions of the ECLSS are to maintain the orbiter's thermal stability, provide a pressurized, habitable environment for the crew and onboard avionics, and store water and liquid waste.
- The four components of the ECLSS are the pressure control, atmospheric revitalization, active thermal control, and supply and waste water systems.
- The pressure control system pressurizes the crew cabin at 14.7 psia, pressurizes the supply and waste water tanks, and provides breathing oxygen directly to the launch and entry suit helmets.
- The main components of the pressure control system are oxygen and nitrogen systems, tanks, and valves.
- The atmospheric revitalization system circulates through the crew compartment to control relative humidity between 30 and 75 percent, maintain carbon dioxide and carbon monoxide at non-toxic levels, control temperature and ventilation in the crew compartment, and provide avionics cooling. The water loop provides cooling for the crew and avionics.
- The atmospheric revitalization system consists of cabin air loops, water coolant loops, fans, and heat exchangers and interchangers.
- The active thermal control system provides orbiter heat rejection during all phases of the mission.
- The active thermal control system consists of two complete, identical Freon coolant loop systems, cold plate networks for cooling avionics units, liquid/liquid heat exchangers, and radiators, flash evaporators, and ammonia boilers.
- The supply water system stores potable water generated by the fuel cells. The supply water is used for flash evaporator system cooling, crew consumption, and hygiene.
- The waste water system stores waste from the crew cabin humidity separator and from the crew.
- Four supply water tanks and one waste water tank are located beneath the crew compartment middeck floor.
- Panels that control the major portion of ECLSS functions are panels L1, L2, MO10W, and R12L. Panels ML31C, ML86B, R13L, and MD44F also control ECLSS functions.
- ECLSS status can be monitored on panel O1 and on the following CRT displays: ENVIRONMENT (DISP 66), SM SYS SUMM 1, SM SYS SUMM 2, APU/ENVIRON THERM (DISP 88), and BFS THERMAL.

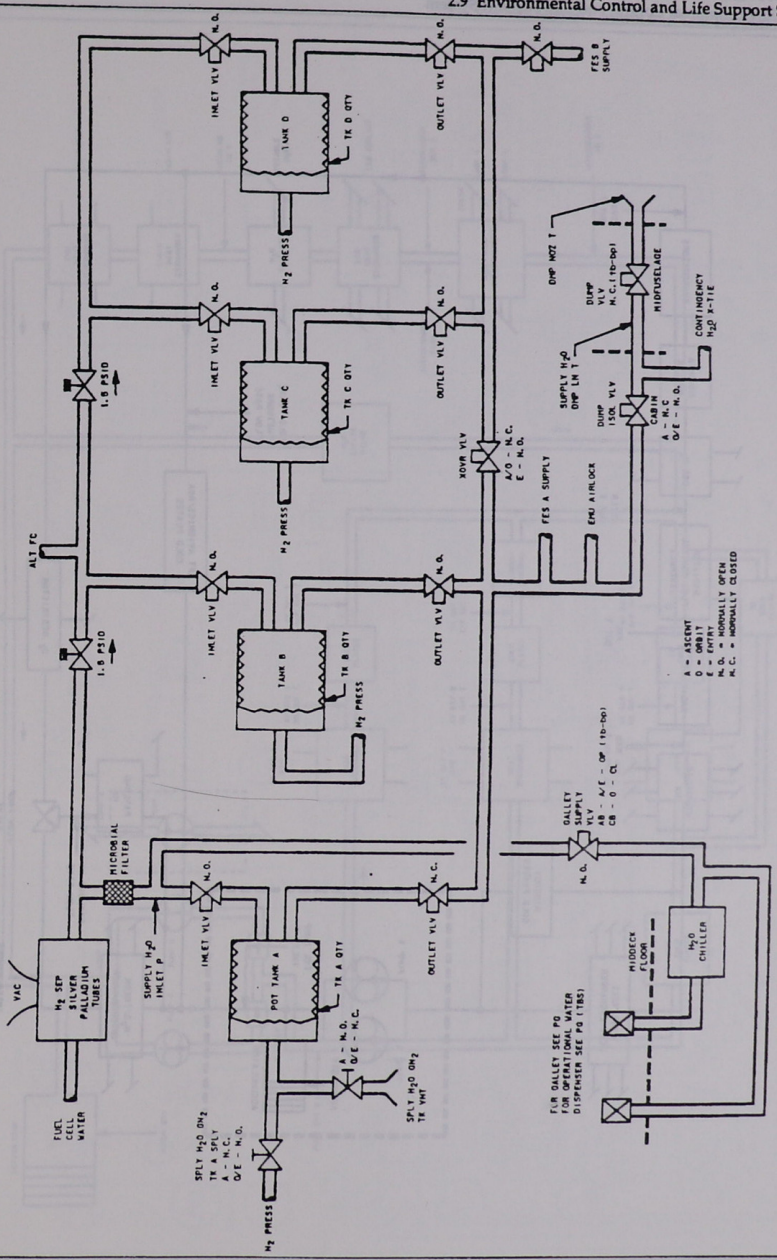

Supply Water Storage System

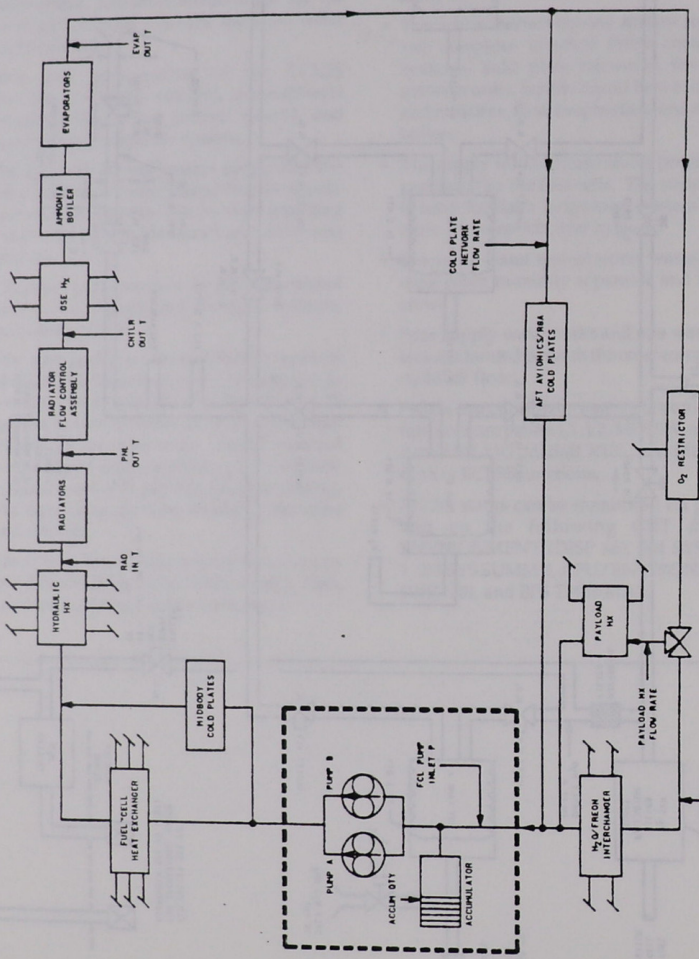
EVAPORATORS
EVAP OUT T
AMMONIA BOILER
OSE H2
CHILR OUT T
RADIATOR FLOW CONTROL ASSEMBLY
PML OUT T
RADIATORS
RAD IN T
HYDRAULIC HX
FUEL-CELL HEAT EXCHANGER
MIDBODY COLD PLATES
PUMP B
PUMP A
FCL PUMP INLET P
ACCUM QTY
ACCUMULATOR
COLD PLATE NETWORK FLOW RATE
AFT AVIONICS/RBA COLD PLATES
PAYLOAD HX
PAYLOAD HX FLOW RATE
H2O/FREON INTERCHANGER
INTERCHANGER FLOW RATE
FLOW PROP VALVE
O2 RESTRICTOR

Freon Flow

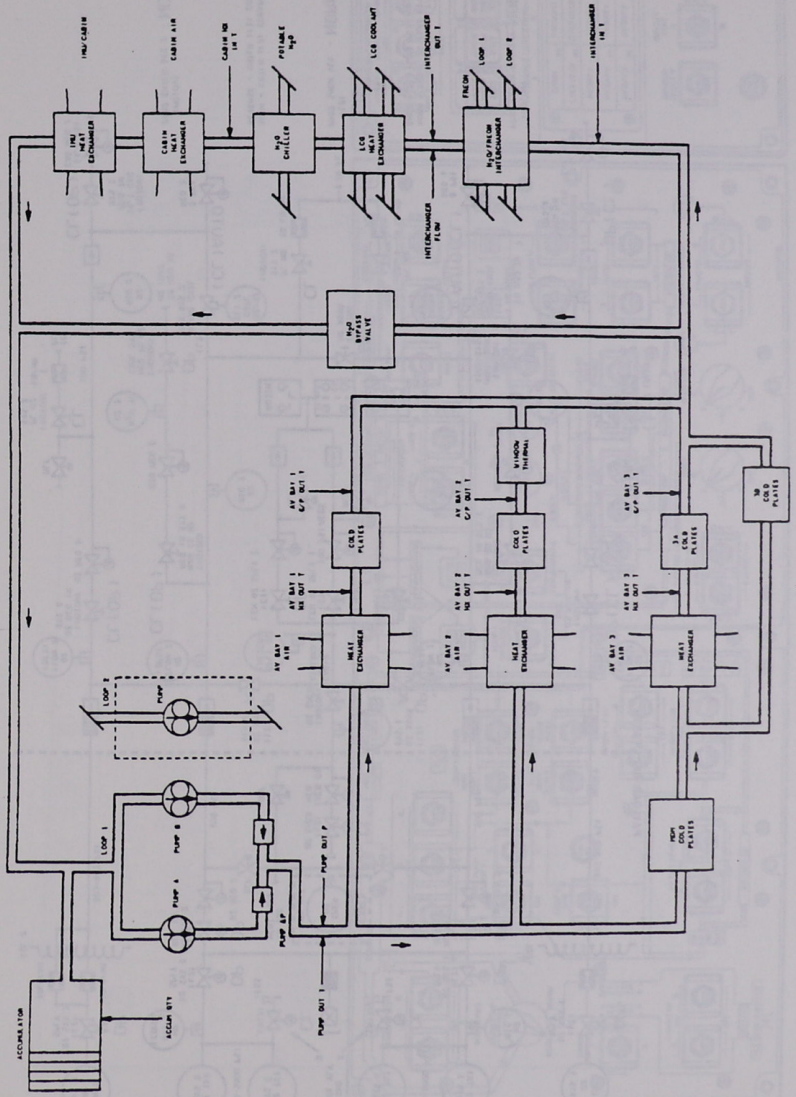
INTERCHANGER IN 1
INTERCHANGER FLOW
LOOP 1
LOOP 2
PUMP
LOOP 2
LOOP 1
PUMP A
PUMP B
PUMP DP
PUMP OUT P
PUMP OUT 1
ACCUMULATOR
ACCUM OUT

Water Loops

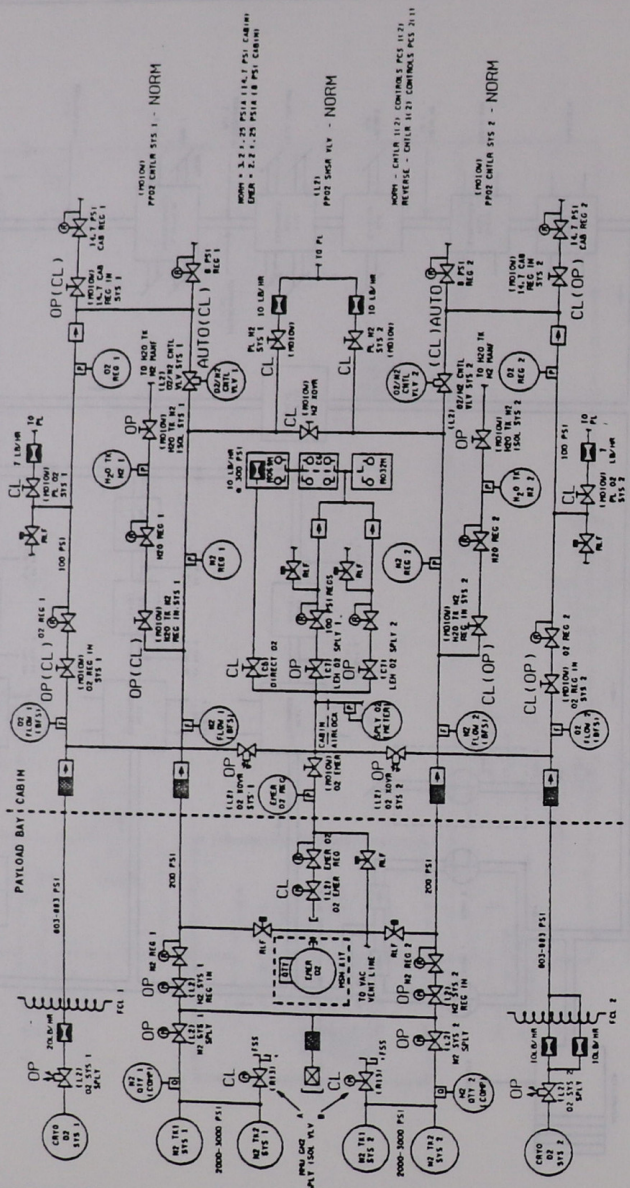

Pressure Control System (Orbit)

L1
CABIN HX
H2O CHILLER
LOG HX
HUMIDITY SEP
A
B
ON
OFF
WASTE H2O
CABIN TEMP
COOL
WARM
MAU FAN
A
B
C
H2O
H2O PUMP
LOOP 1
GPC
LOOP 1 BYPASS
MAN
INCR
MODE
AUTO
DECR
LOOP 2 BYPASS
CABIN TEMP CNTLR
CABIN FAN
AV BAY 1 FAN
AV BAY 2 FAN
AV BAY 3 FAN
AV RACK CP
FLT DECK AVIONICS
INTERCHANGER
AFT CP
PAYLOAD HX
FC HX
MID CP
FREON PUMP
LOOP 1
LOOP 2
HYD HX
RADIATORS
RAD CONTROLLER
OUT TEMP
HI
NORM
AUTO A
AUTO B
RAD
MAN SEL
RAD FLOW
BYPASS VALVE
H2O ALTERNATE PUMPS OPEN
CLOSE
FLOW PROP VLV
LOOP 1
LOOP 2
INTCHGR
PAYLOAD HX
A SPLY
B SPLY
FLASH EVAP CONTROLLER
PRI A
PRI B
SEC
HI LOAD EVAP
ENABLE
TOPPING EVAP
TOPPING EVAPORATOR HEATER
L NOZZLE-R
DUCT
HI LOAD DUCT HTR
NH3 BOILER
NH3 CONTROLLER
PRI/GPC
SEC/GPC
DFI/CP
FIRE SUPPRESSION
AV BAY 1
AV BAY 2
AV BAY 3
ARM
SAFE
AGENT DISCH
SMOKE DETECTION
CABIN
PAYLOAD
L FLT DECK
R FLT DECK
SENSOR RESET
CIRCUIT TEST

Panel L1

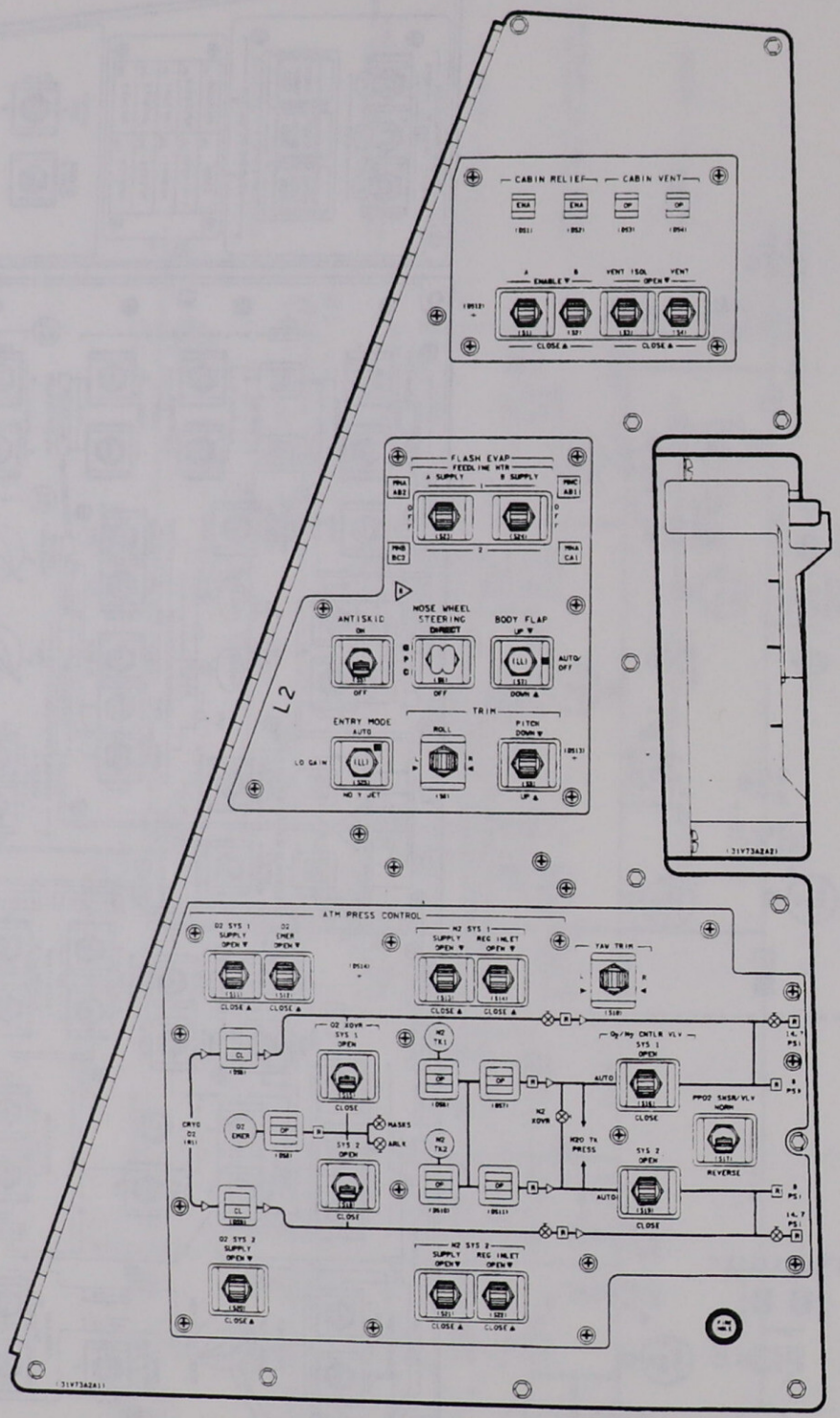
CABIN RELIEF
CABIN VENT
ENABLE
VENT ISOL
OPEN
CLOSE
FLASH EVAP
FEEDLINE HTR
A SUPPLY
B SUPPLY
NOSE WHEEL STEERING
DIRECT
ANTISKID
BODY FLAP
AUTO/ OFF
TRIM
ENTRY MODE
AUTO
ROLL
PITCH
L2
ATM PRESS CONTROL
O2 SYS 1 SUPPLY
O2 EMER
H2 SYS 1 SUPPLY
REG INLET
TAN TRIM
O2 XOVR
H2 XOVR
H2O TK PRESS
SYS 1 OPEN
SYS 2 OPEN
REVERSE
O2 SYS 3 SUPPLY
H2 SYS 2 SUPPLY

Panel L2

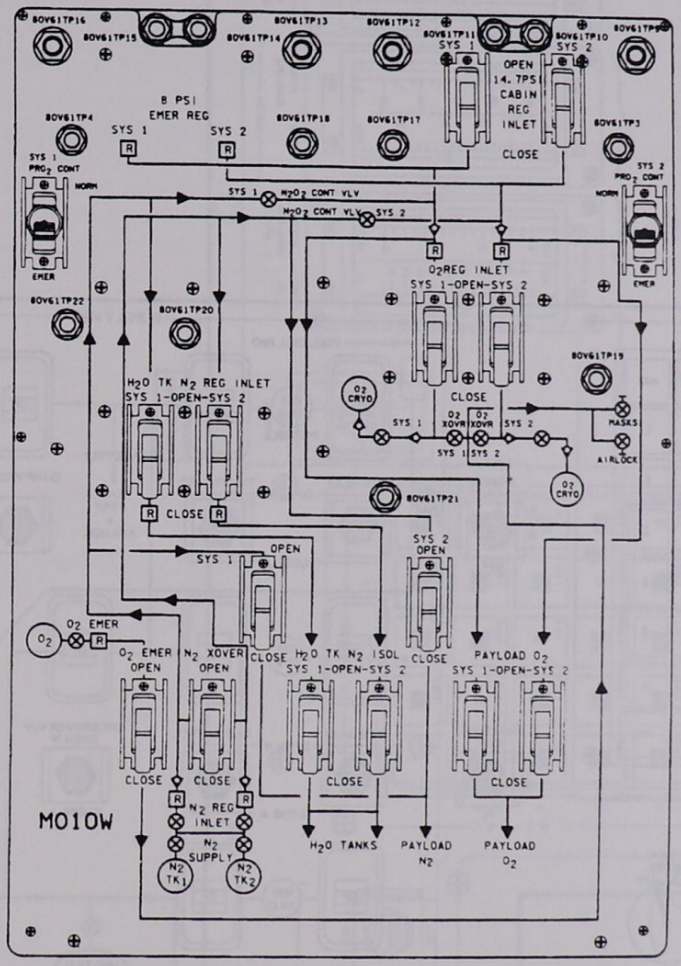
8OV61TP16
8OV61TP15
8OV61TP14
8OV61TP13
8OV61TP12
8OV61TP11
SYS 1
8OV61TP10
SYS 2
8OV61TP9
OPEN
14.7PSI
CABIN
REG
INLET
CLOSE
8 PSI
EMER REG
SYS 1
SYS 2
8OV61TP4
8OV61TP18
8OV61TP17
8OV61TP3
SYS 1
PRO2 CONT
NORM
EMER
SYS 1 N2O2 CONT VLV
N2O2 CONT VLV SYS 2
SYS 2
PRO2 CONT
NORM
EMER
O2REG INLET
SYS 1-OPEN-SYS 2
8OV61TP22
8OV61TP20
8OV61TP19
H2O TK N2 REG INLET
SYS 1-OPEN-SYS 2
O2 CRYO
CLOSE
SYS 1
O2 XOVR
O2 XOVR
SYS 2
MASKS
AIRLOCK
SYS 1
SYS 2
O2 CRYO
CLOSE
8OV61TP21
SYS 1
OPEN
SYS 2
OPEN
O2 EMER
O2 EMER
OPEN
N2 XOVER
OPEN
CLOSE
H2O TK N2 ISOL
CLOSE
PAYLOAD O2
SYS 1-OPEN-SYS 2
SYS 1-OPEN-SYS 2
CLOSE
CLOSE
CLOSE
CLOSE
N2 REG
INLET
N2
SUPPLY
N2
TK1
N2
TK2
MO10W
H2O TANKS
PAYLOAD
N2
PAYLOAD
O2

Panel MO10W

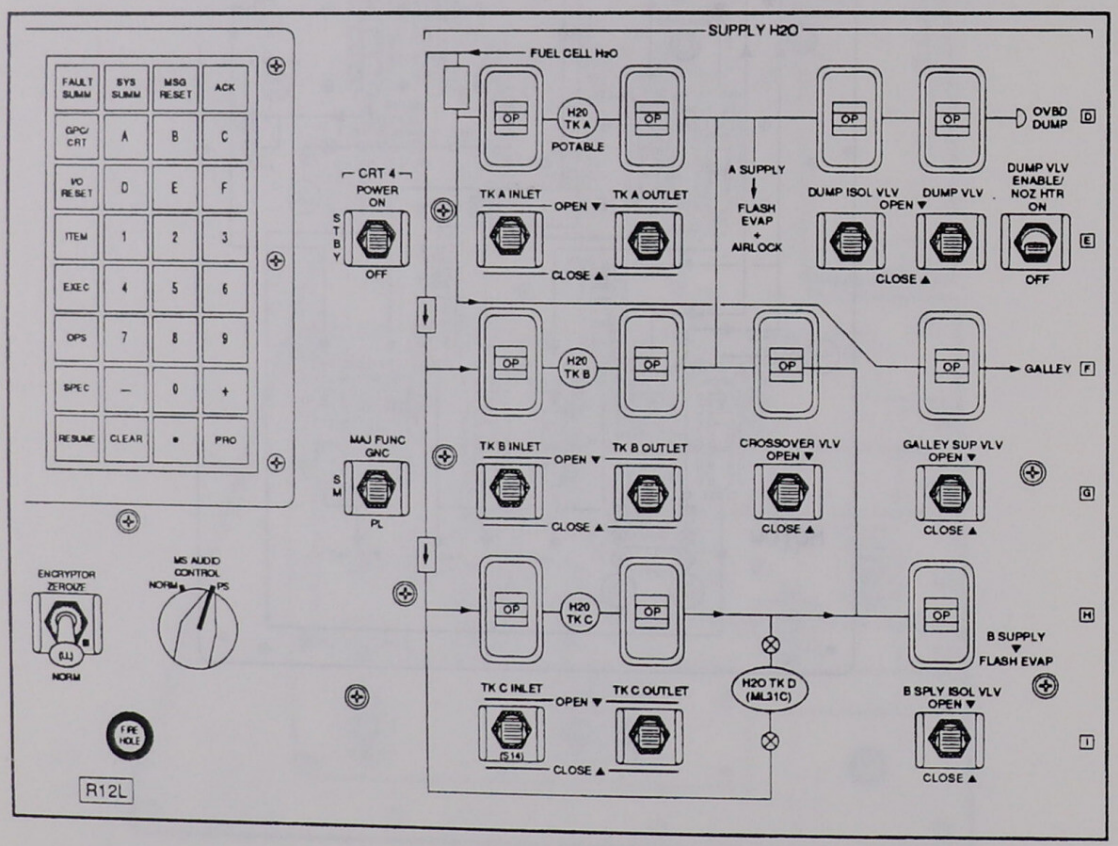
SUPPLY H2O
FUEL CELL H2O
FAULT SUMM
SYS SUMM
MSG RESET
ACK
GPC/ CRT
I/O RESET
ITEM
EXEC
OPS
SPEC
RESUME
CLEAR
PRO
CRT 4
POWER ON
STBY
OFF
H2O TK A
POTABLE
TK A INLET
TK A OUTLET
OPEN
CLOSE
A SUPPLY
FLASH EVAP
AIRLOCK
DUMP ISOL VLV
DUMP VLV
DUMP VLV ENABLE/ NOZ HTR ON
OVBD DUMP
H2O TK B
GALLEY
MAJ FUNC GNC
PL
TK B INLET
TK B OUTLET
CROSSOVER VLV
GALLEY SUP VLV
H2O TK C
TK C INLET
TK C OUTLET
H2O TK D (MIL31C)
B SUPPLY
FLASH EVAP
B SPLY ISOL VLV
ENCRYPTOR ZEROIZE
MS AUDIO CONTROL
NORM
PS
FIRE HOLD
R12L

Panel R12L

NOT ON OV102
OV102 ONLY
FIRE HOLE
COAS
ON
OFF
GPC STATUS
FAILED GPC
1 2 3 4 5
COAS ON
OFF
AIR TEMP
H2O PUMP OUT PRESS
FREON FLOW
EVAP OUT TEMP
CABIN dP/dT PSIA/MIN
O2 H2 FLOW
CABIN PRESS
PPO2
PSIA
PPH
LOOP 1
LOOP 2
SENSOR A
SENSOR B
CAB HX OUT
AV BAY
O2 SYS 1
N2
O2 SYS 2
H2
O1

Panel O1

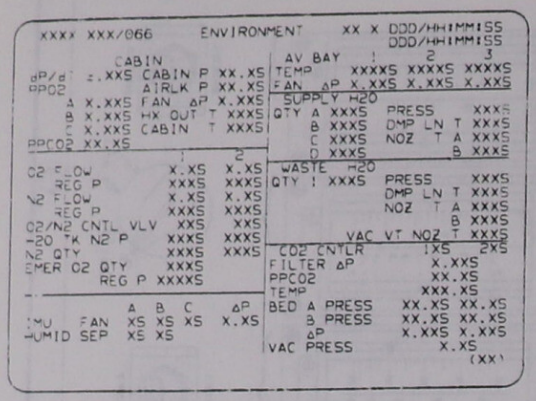

ENVIRONMENT (DISP 66)

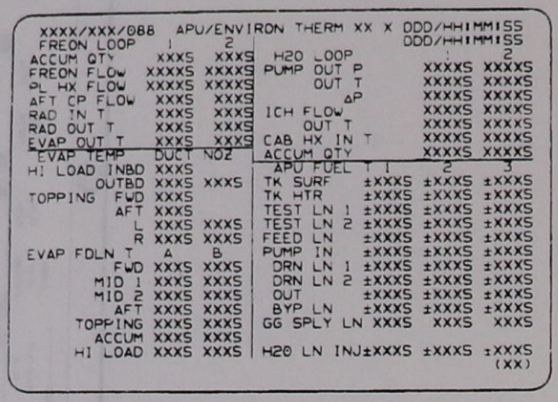

APU/ENVIRON THERM (DISP 88)

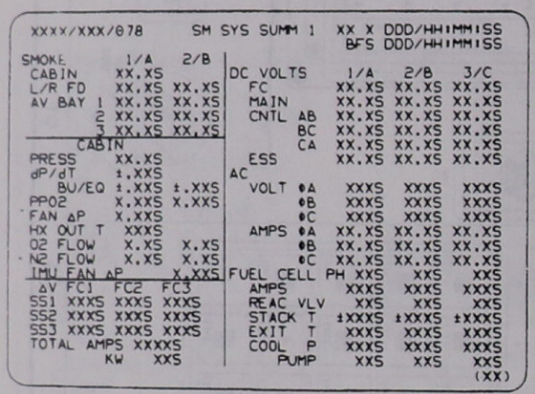

SM SYS SUMM 1

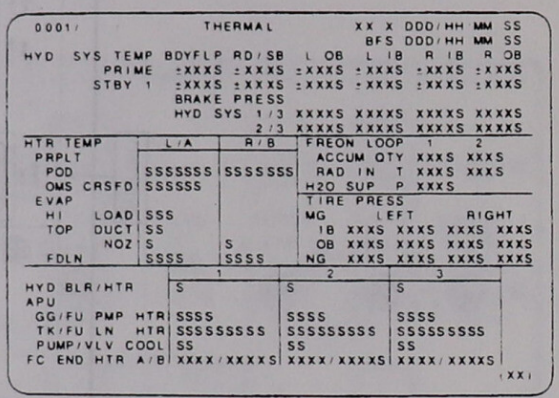

BFS THERMAL

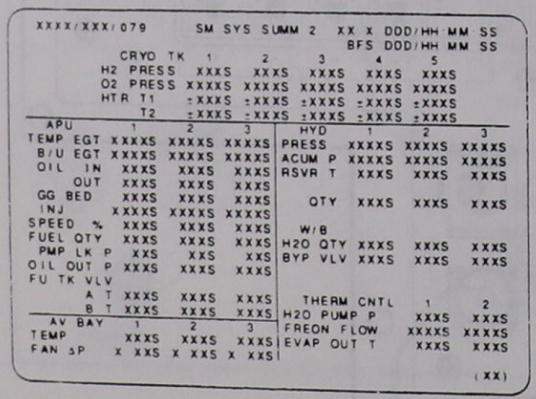

SM SYS SUMM 2

ECLSS Rules of Thumb

NOTE

Numbers presented here are for typical orbit power and heat loads and may vary significantly depending on attitude and power loading.

- Supply water tanks fill at about 1.5 percent per hour depending on fuel cell load (.8 lb/kW hr + 16 lb over 1%; 14 kW typical orbit power load).
- Water tanks empty at about 100 percent per hour for a water dump, about 50 percent per hour when using the FES high load evaporator for cooling with payload bay doors closed, and about 16 percent per hour when using the FES topping evaporator for supply water dumps on orbit with the doors open.
- On-orbit cold soak is good for 20 to 30 minutes of cooling. Prelaunch Freon conditioning is good for 2 to 3 minutes of cooling.
- NH_3 boiler supply is good for 25 minutes of ground cooling.
- A single cryo O_2 tank is good for about 2 to 3 days of orbit usage depending on crew size and power level. H2 tanks are sized to match O2 usage.
- A single LiOH canister is usable for about 48 man-hours.

2.10 ESCAPE SYSTEMS

CONTENTS

Description 2.10-1
Launch Pad Egress Systems 2.10-1
Launch/Entry Suit 2.10-4
Personal Parachute Assembly 2.10-5
Crew Escape System Pyrotechnics 2.10-13
Egress Pole System 2.10-14
Emergency Egress Slide 2.10-16
Secondary Emergency Egress 2.10-16
Procedures for Bailout, Water Survival, and Rescue 2-10-20

Description

Escape systems refer to equipment and systems intended to facilitate emergency and contingency egress of the flight crew. Escape systems include equipment worn by the crewmembers, hardware built into the orbiter, and external systems located on the launch pad. Types of escape or emergency egress from the orbiter depend upon the mission phase (basically prelaunch, in-flight, and post-landing). The prelaunch phase implies the crew must perform an emergency egress while the orbiter is still positioned on the launch pad.

The in-flight phase requires that the crew can safely bail out of the orbiter during controlled gliding flight at altitudes of 30,000 feet and below. A special in-flight crew escape system is devised for this phase. It includes partial pressure suits, oxygen bottles, parachutes, and life rafts, pyrotechnics to vent the cabin and jettison the orbiter side hatch, and an escape pole to allow the crewmembers to clear the vehicle. The most likely uses of the system would be during a return-to-launch-site (RTLS) abort, transatlantic abort landing (TAL), or abort once-around (AOA) when the orbiter has insufficient energy to achieve a runway landing, or after an emergency deorbit, made regardless of landing site opportunities.

During the post-landing phase, the crew exits the orbiter following an emergency landing or landing at a contingency site. The orbiter will probably not survive a water ditching; therefore, bailout is the primary escape mode over water.

The orbiter-based hardware associated with the in-flight crew escape system was installed after the Challenger accident. Some orbiter modifications were required for the inclusion of the in-flight escape system. The side hatch water coolant lines for side hatch thermal conditioning were modified to accommodate the installation of the pyrotechnic separation system. The flight crewmembers' seats were also modified to accommodate the crew's altitude protection system suit. In addition, a handhold was added in the middeck next to the side hatch to permit the crewmembers to position themselves through the side hatch opening for bailout. The interdeck access ladder was widened, and a handhold was added to the commander's seat to allow easier movement through the interdeck access.

Software adjustments were also required to accommodate the in-flight escape system. Software changes applied to the primary avionics software system for OPS 3 and 6. The changes enable an automatic flight control mode of the orbiter with input by crewmembers by using the ATO abort position on the abort rotary switch in MM 603/305. The automatic mode stabilizes the flight by controlling the orbiter's velocity and angle of attack to the desired bailout conditions, thus allowing the commander to escape.

Launch Pad Egress Systems

In the event of a potential catastrophe on the launch pad, escape by the flight crew is facilitated by descending to a safe area via slidewire baskets. The emergency egress/escape system uses seven separate slidewires and seven multi-person basket assemblies to effect rapid escape of personnel from the 195-foot level of the fixed service structure to a landing zone. The landing zone is approximately 1,200 feet west of the fixed service structure. The flight crew leaves the slidewire baskets and proceeds to the bunker, which is provided with breathing air, first aid supplies, and communications equipment. The flight crew will only leave the bunker upon instructions by the NASA Test Director.

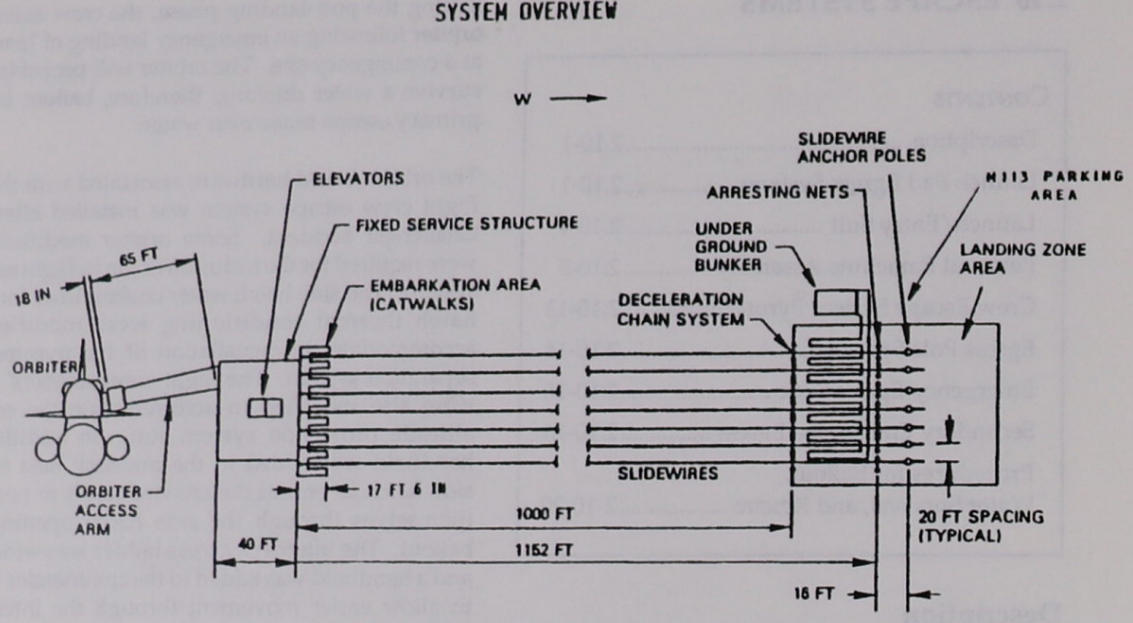

Launch Pad Emergency Egress System

An M-113 is positioned near the slidewire termination area. The M-113 is a military personnel carrier designed to provide protected evacuation from the launch pad area.

There are four modes of escape from the launch pad area, varying in degrees of egress aid to the crew by the closeout crew or pad fire/rescue crew. In the case of an aided escape, support crews are responsible for opening the side hatch using an emergency hatch opening tool.

The launch pad structure also includes an escape temperature and hydrogen fire-hazard monitoring system, consisting of 10 temperature sensors and 14 ultraviolet (UV) hydrogen fire detectors. Nine UV fire detectors are located in the area of the environmental chamber, the truss, and the fixed service structure both above and below the fire barrier. Five UV fire detectors are also spaced vertically down the fixed service structure from the 175-foot level to the 95-foot level to view a profile of the orbiter. The 10 temperature sensors are located along the egress path, from the environmental chamber to the slidewire basket embarkation area. The sensors are placed both above and below the fire barrier. The signals from these sensors are displayed on firing room console C-7 in the launch control center.

The Firex spray system provides water shower to the orbiter access arm and the fixed service structure in the event of a fire. There are 20 water spray nozzles located on the orbiter access arm, approximately 4 feet above the walkway, and 20 on the fixed service structure, 7 to 10 feet overhead. Each nozzle emits 287 gallons of water per minute. Two control modes, local and remote, operate the Firex spray system. The local mode consists of paddle switches located either outside the white room on the orbiter access arm or on the east side of the elevators directly facing the orbiter access arm. The remote mode is a hard-wire backup control panel located in the launch control center.

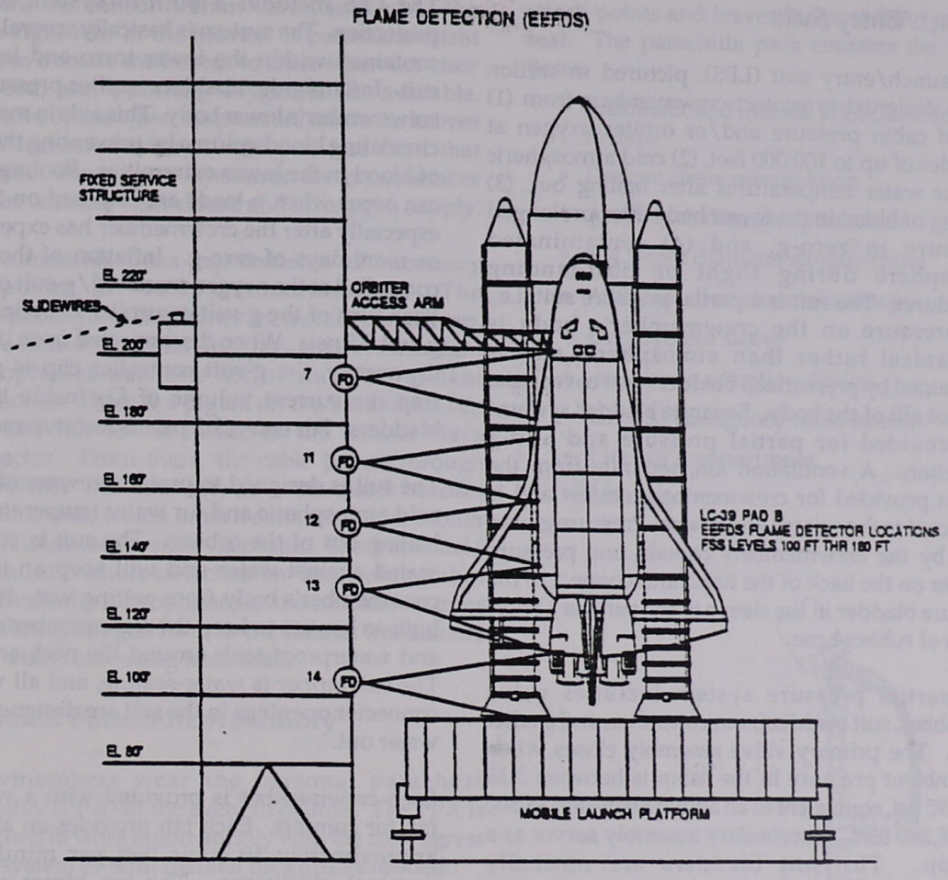

Emergency Egress Fire Dectection System Flame Detector Locations

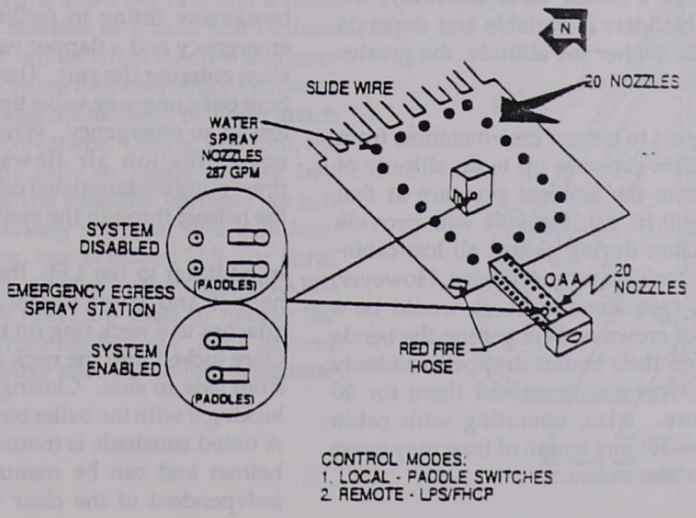

Emergency Egress Water Spray Control Panels

Launch/Entry Suit

The launch/entry suit (LES), pictured in section 2.5, is designed to protect crewmembers from (1) loss of cabin pressure and/or orbiter oxygen at altitudes of up to 100,000 feet, (2) cold atmospheric and/or water temperatures after bailing out, (3) pooling of blood in the lower body after prolonged exposure to zero-g, and (4) contaminated atmosphere during flight or post-landing procedures. The suit is a partial pressure suit; i.e., the pressure on the crewmember's body is mechanical rather than atmospheric and is maintained by pressurized bladders that cover most (but not all) of the body. Separate bladder systems are provided for partial pressure and anti-g protection. A ventilation fan, separate from the LES, is provided for crewmember comfort and is connected to the suit via an air hose. Pressure gloves worn by the crewmembers contain one pressure bladder on the back of the hand and connect to the pressure bladder in the sleeve of the suit via a short length of rubber hose.

The partial pressure system includes valve assemblies, suit bladders, suit controller, and a relief valve. The primary valve assembly closes when the ambient pressure in the cabin is between 3.38 and 2.95 psi, equivalent to an altitude between 35,500 and 38,200 feet. A secondary assembly serves as a backup. The suit bladders are normally unpressurized and do not retain pressure unless one of the valve assemblies in the suit controller is closed. Even with a closed valve assembly, the pressure in the bladders is variable and depends upon altitude; the higher the altitude, the greater the pressure in the bladders.

The suit is designed to protect crewmembers from a total loss of cabin pressure up to an altitude of 100,000 feet. Since the ambient pressure at that altitude is only 0.16 psi, the suit will provide adequate protection during almost all lost-cabin-pressure contingencies at ascent or entry. However, during a worst case scenario, there would be a significant risk of crewmembers getting the bends if the pressure on their bodies dropped suddenly from 14.7 to ~3 psi and remained there for 20 minutes or more. Also, operating with cabin pressure that low for any length of time may cause failures in the orbiter avionics.

The LES includes a built-in system for anti-g protection. The system is basically several bladders contained within the lower torso and legs of the suit. Inflating the bladders applies pressure to the crewmember's lower body. This aids in maintaining circulating blood volume by preventing the pooling of blood in the lower extremities. Pooling of blood can occur when g-loads are imposed on the body, especially after the crewmember has experienced 2 or more days of zero-g. Inflation of the g-suit is controlled at the oxygen manifold/g-suit controller. Each turn of the g-suit controller knob inflates the g-suit 0.5 psia. When disconnected from the orbiter O_2 supply, the g-suit controller clip is pulled to trap the current volume of O_2 inside the g-suit bladders. For entry, 1.5 psia is recommended.

The suit is designed to protect crewmembers from cold atmospheric and/or water temperatures after bailing out of the orbiter. The suit is completely sealed against water and will keep an immersed crewmember's body from getting wet. It includes built-in booties to keep the crewmember's feet dry and waterproof seals around the neck and wrists. The suit zipper is water-sealing, and all vents and connector openings in the suit are designed to keep water out.

Each crewmember is provided with a ventilation fan for comfort. Each fan provides an air flow of approximately 10 cubic feet per minute under nominal conditions. The fan blows air into a ventilation hose, which in turn connects to a fitting on the left chest area of the suit. The hose has a breakaway fitting to facilitate rapid egress in an emergency and a flapper valve that prevents water from entering the suit. The suit attachment for the hose has a one-way valve that prevents any pressure loss in an emergency. When the fan is on, little or no ventilation air flows to the helmet, thus preventing contaminated cabin air from flowing into the helmet through the ventilation system.

In addition to the LES, the crewmember wears a helmet and communications cap. The helmet attaches to a neck ring on the partial pressure suit. Once locked into the neck ring, the helmet swivels from side to side. Closing the pressure visor and locking it with the bailer bar seals the helmet cavity. A tinted sunshade is mounted to the outside of the helmet and can be manually raised or lowered independent of the clear visor. The helmet also

contains an antisuffocation valve, located at the lower right rear of the helmet. It permits ambient air from outside the helmet to enter when the visor is closed, and breathing oxygen is not available. The valve opens when the pressure inside the helmet is 1.5 inches of water (0.054 psi) less than that outside. This occurs whenever the crewmember inhales with the visor closed and no oxygen supply.

The communications cap contains all necessary equipment for voice communication. The microphones and earphones are included in the cap. The communications cap has dual/redundant microphones and one set of dual/redundant earphones. There is a pigtail on the back of the cap that attaches to the inside of the helmet via a connector. From there, the cable passes through the helmet and connects to a standard headset interface unit, which in turn connects to the orbiter communications system via a cable. There are dual/redundant microswitches in the helmet that deactivate the microphones in the communications cap during oxygen flow to the helmet (inhalation, open visor, or leaking neck seal).

Personal Parachute Assembly

Crewmembers wear the personal parachute assembly (PPA) in the event of bailout. The PPA is designed to work automatically with the crew egress pole system or with manual backups as needed.

The parachute pack contains the parachutes, risers and associated items, a small life raft, and a radio beacon. The pack doubles as a back seat cushion and is already in the orbiter when the crew ingresses prior to launch. There are four connections between the parachute pack and the harness: two riser attach fittings and two ejector snaps. During a bailout, the crewmember needs only to rotate the lap belt connector to release the shoulder harness/lap belt to egress the seat, taking the parachute with him. Upon water landing, two standard U.S. Air Force saltwater activated release system (SEAWARS) units, one for each riser, are used to release the risers and canopy from the harness. For a ground egress, the crewmember releases the four parachute attach points and leaves the parachute pack in the seat. The parachute pack contains the following items:

- Automatic and manual pilot chute deployment system
- Drogue chute release knob
- An 18-inch diameter pilot chute
- A 4.5-foot diameter drogue chute
- A 26-foot diameter main canopy
- Deployment sleeve
- Automatic actuation device
- URT-33 emergency radio beacon
- Life raft compartment
- Life raft.

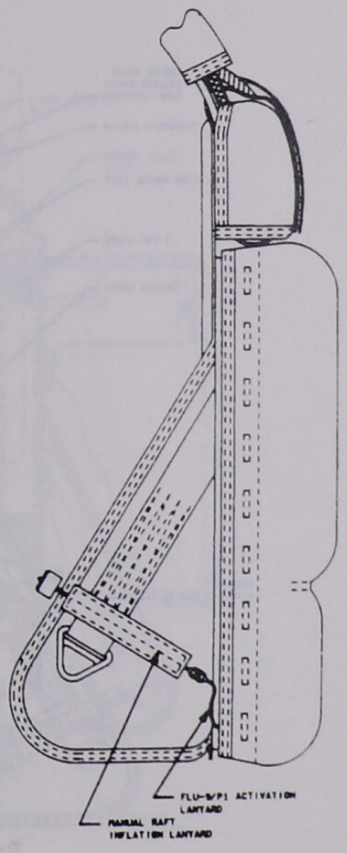

Parachute Pack (Side)

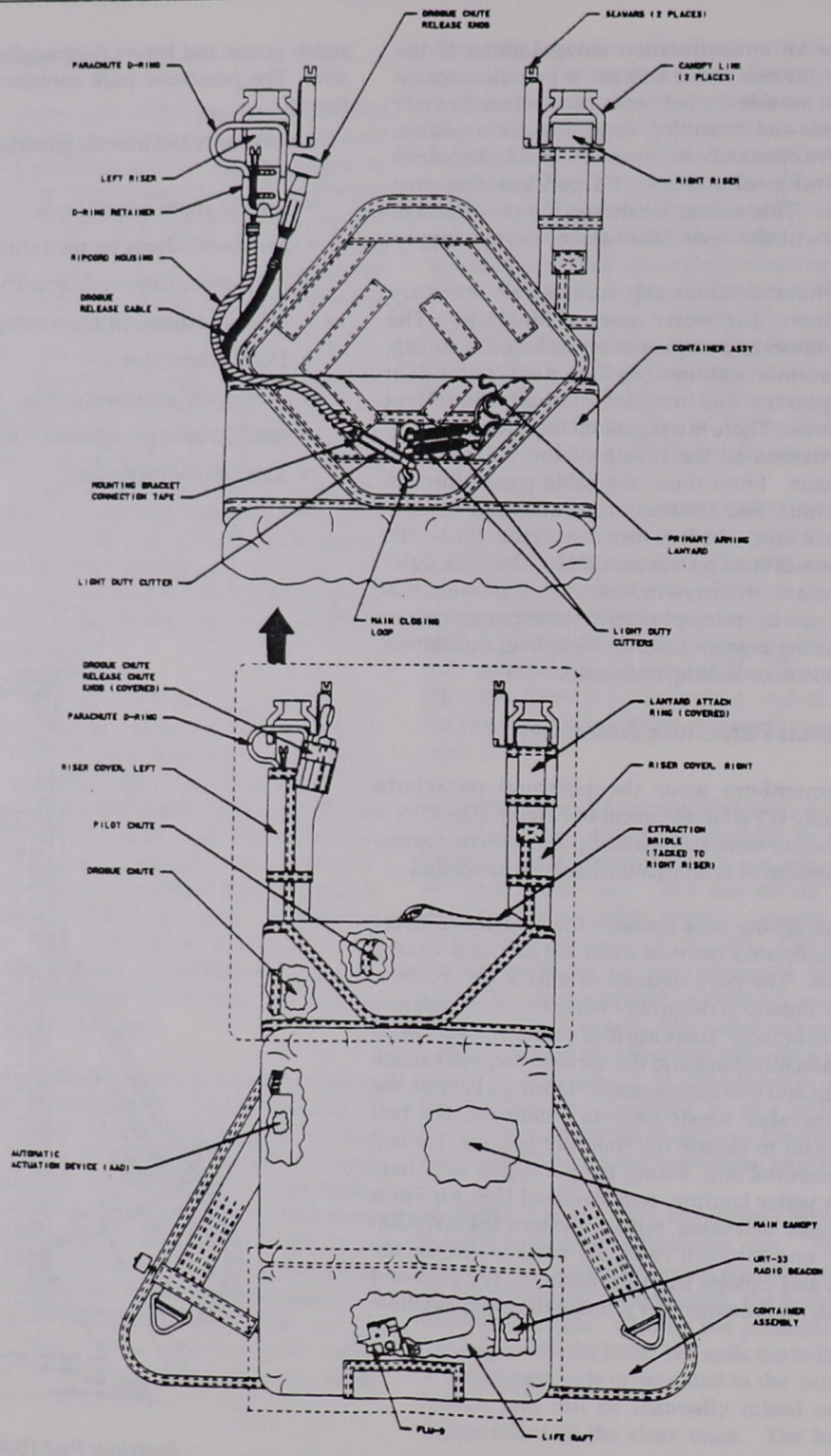

Parachute Pack (Back)

The parachute harness is a modified U.S. Navy MA-2 harness. The harness contains an interwoven system of nylon straps, providing complete body support for crewmembers during bailout, emergency egress, and rescue operations. In addition to the support straps, the harness also includes the following items that may prove necessary in an emergency:

1. Two bottles of oxygen for emergency breathing are woven into the back of the harness, and contain a total of 401 liters of oxygen at 14.7 psi. At 38 liters per minute of moderate use, the oxygen will last for 10.5 minutes at sea level and several times that at high altitudes.
2. A carabiner, attached to the left side of the harness, is an oval aluminum ring for attaching descent devices. The carabiner is used during emergency egress and rescue from the orbiter when it is on the ground.
3. A life preserver unit (LPU) encircles the crewmember's upper torso. It inflates automatically via a CO_2 cartridge when submersed in water. It may also be inflated manually. The unit is designed to keep an unconscious crewmember's head out of the water.
4. Sixteen individual packages contain two liters of emergency drinking water.

The primary method of deploying the pilot chute is by using the automatic bailout sequence. The extraction bridle is connected to a bailout lanyard located on the crew escape pole. As the crewmember descends the pole, the loads placed on the bridle/lanyard assembly activate two pyrotechnic systems. The first system separates the bridle/lanyard from the parachute pack, while the second system cuts the cord holding the pilot chute flap closed. As the flap opens, the spring-loaded

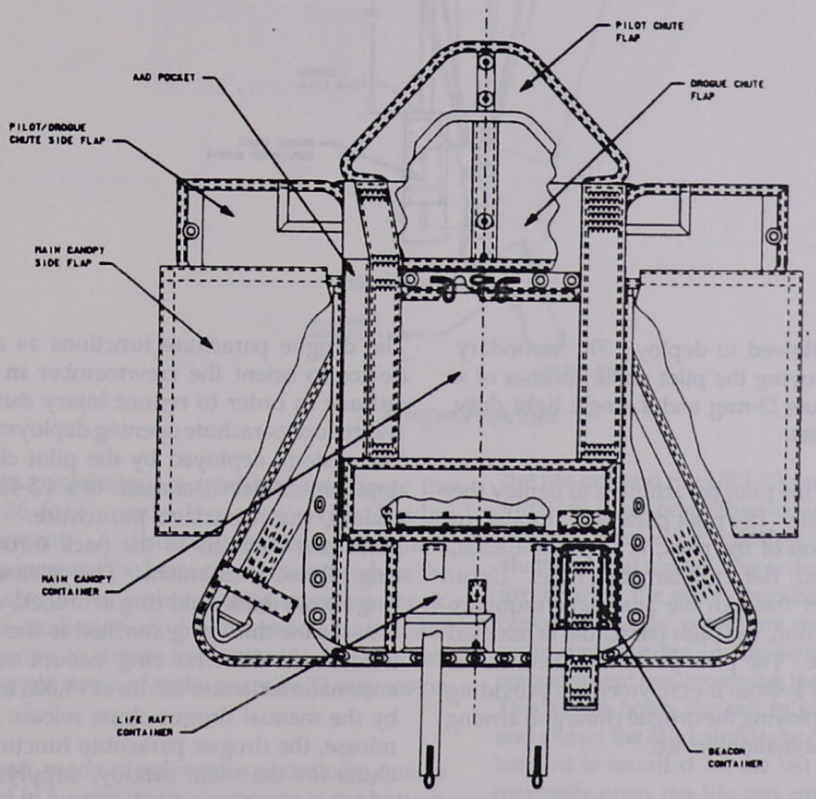

Parachute Pack (Unpacked)

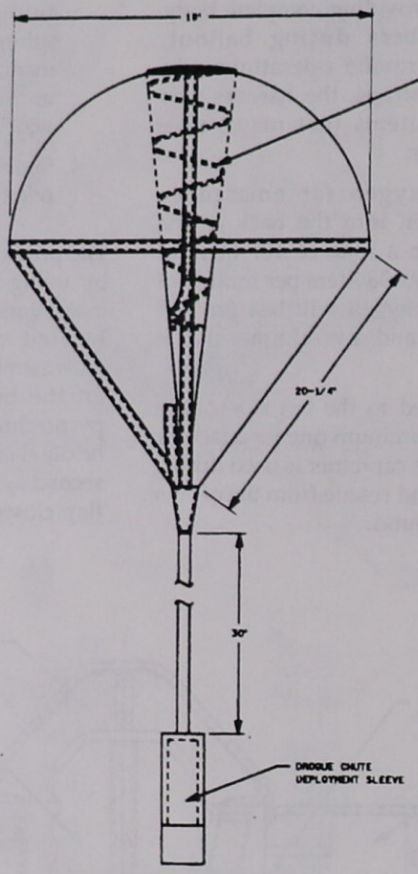

Pilot Parachute

pilot chute is allowed to deploy. The secondary system for deploying the pilot chute consists of a manual parachute D-ring and a single light duty pyrotechnic cutter.

The function of the pilot parachute is to deploy the drogue parachute. The pilot parachute, located in the upper section of the pack, is a spring-loaded, internally vaned, flat circular parachute. Upon activation either through the automatic sequence or manual function, the pilot parachute is released from its closure. The pilot parachute then moves into clean air away from the crewmember providing the force for deploying the drogue chute and arming the automatic actuation device.

The drogue parachute functions as a stabilizing device to orient the crewmember in a preferred attitude in order to reduce injury during freefall, and reduce parachute opening deployment damage. The system, deployed by the pilot chute using a deployment sleeve, consists of a 4.5-foot diameter, ribless, guide-surface parachute. The drogue parachute connects to the pack through a three-ring release mechanism. The release of the first ring allows the second ring to unlock, which in turn unlocks the third ring attached to the drogue riser. Release of the first ring occurs either by the automatic actuation device at 14,000 feet altitude or by the manual drogue chute release knob. Upon release, the drogue parachute functions as a pilot chute for the main canopy, supplying the force through an extraction lanyard for deployment.

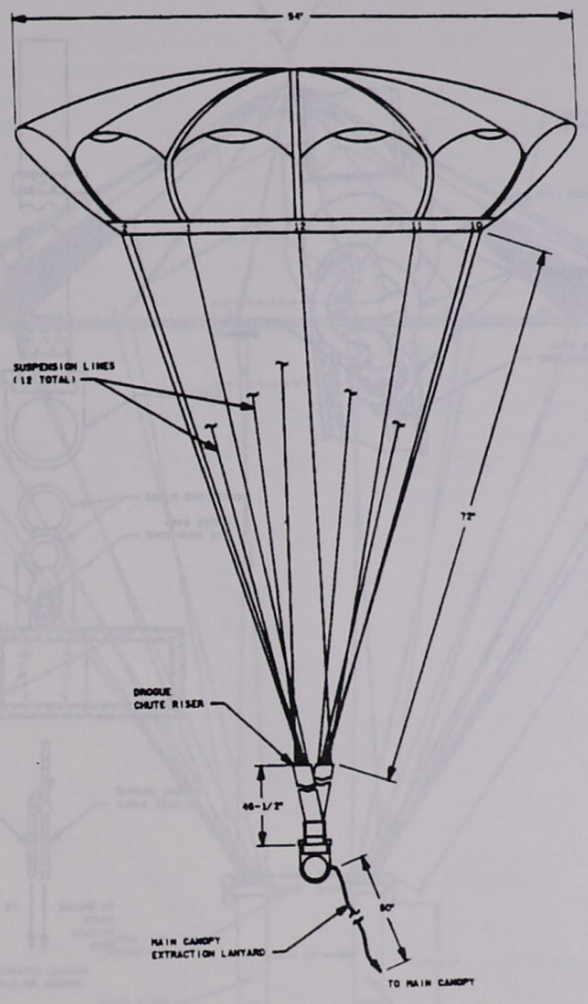

Drogue Parachute

The main parachute is a modified version of the Navy, 26-foot, conical canopy with Kevlar reinforcement. A discard line reefing system is added to increase the basic strength and reduce the load to the crewmember during opening shock. Four anti-oscillation windows are added at the base of the canopy to reduce oscillation during descent. The canopy is attached to the risers by 22 suspension lines.

The life raft, made of polyurethane coated nylon, is contained in a separate compartment at the bottom of the parachute pack. This compartment includes the life raft and the URT-33 radio beacon. Life raft inflation is accomplished using a water-activated inflation device for inflating the primary life raft chamber, and a manually activated inflation device for inflating the secondary chamber. As the main canopy pulls the parachute risers out of the pack, redundant cutters in the bottom of the life raft compartment fire, loosening the bottom of the pack. This action holds the raft in place during descent and allows the raft to inflate upon water landing. A lanyard is installed on the left side of the pack to manually open the life raft compartment and for manual inflation. Two oral inflation tubes are used

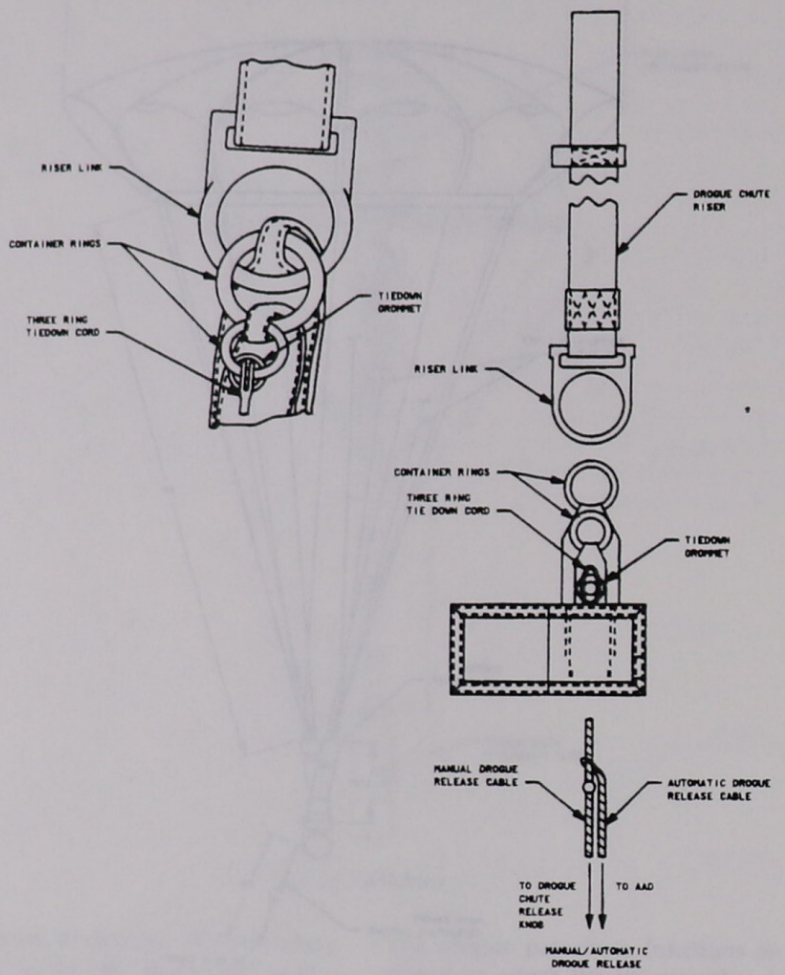

Three-Ring Release Assembly

for backup inflation. The URT-33 radio beacon is activated by the right parachute riser as it is pulled from the pack by the main canopy. A magnetic plug pulled by the riser activates the beacon, which transmits during crewmember descent. The beacon has a range of 60 miles to aircraft at a 10,000-foot altitude.

Each crewmember is also armed with additional signalling devices, including a PRC-112 survival radio, a strobe light, a pen-gun flare kit, a hand-held flare, a signal mirror, two 12-hour stick chem-lights, and two packs of sea dye marker. Other survival gear includes drinking water, a knife, and motion-sickness pills.

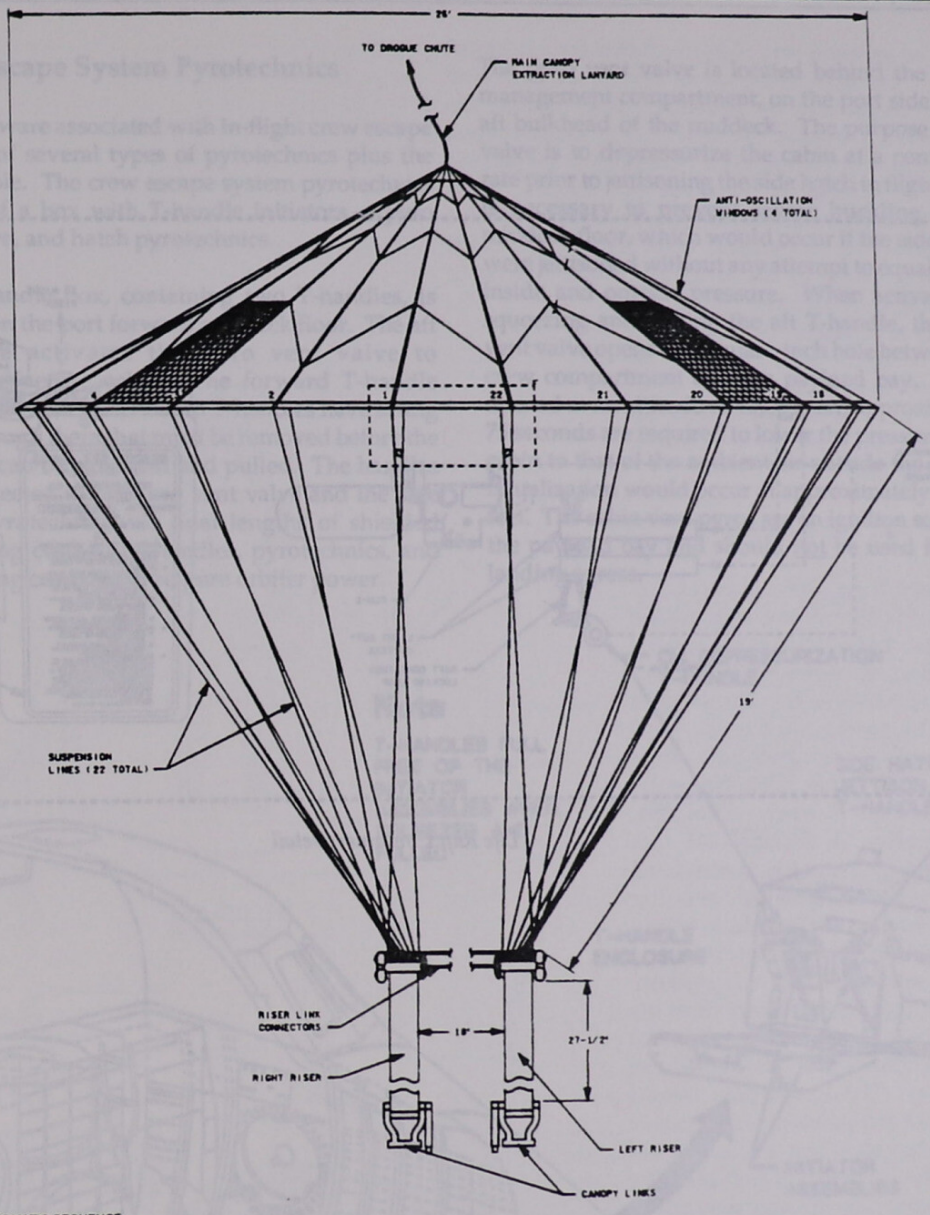

AUTOMATIC SEQUENCE

1. EXTRACTION LOADS ON BRIDLE ASSEMBLY BEGINS AUTO SEQUENCE,150-POUND MINIMUM LOAD REQUIRED
2. 1.5-SECOND DELAY, HEAVY DUTY CUTTERS SEPARATE BRIDLE/LANYARD ASSEMBLY
3. 1.5-SECOND DELAY (3.0 SECONDS POST LOADING), LIGHT DUTY CUTTERS OPEN PILOT CHUTE FLAP
4. SPRING DEPLOYED PILOT CHUTE PULLS DROGUE CHUTE OUT OF PACK, PILOT CHUTE FALLS AWAY
5. DROGUE CHUTE DEPLOYMENT ARMS AAD. DROGUE CHUTE CONNECTED TO PARACHUTE PACK AT THREE-RING RELEASE ASSEMBLY
6. AAD FIRES AT 14,000 FT. AND RELEASES THREE-RING RELEASE ASSEMBLY, DROGUE CHUTE DEPLOYS MAIN CANOPY
7. MAIN CANOPY RISERS ACTIVATE URT-33 RADIO BEACON AND FIRE LIGHT DUTY CUTTERS TO OPEN LIFE RAFT CONTAINER
8. MAIN CANOPY INITIALLY REEFED UPON DEPLOYMENT. 2.0 SECOND DELAY. LIGHT DUTY CUTTERS CUT MAIN CANOPY REEFING LINE, MAIN CANOPY OPENS FULLY
9. SEAWARS RELEASE MAIN CANOPY RISERS FROM HARNESS UPON IMMERSION IN SALT WATER

MANUAL SEQUENCE

1. CREWMEMBER PULLS MANUAL PARACHUTE D-RING
2. 2.0-SECOND DELAY. LIGHT DUTY CUTTER OPENS PILOT CHUTE FLAP
3. SEQUENCE SAME AS 4-8 ABOVE

MANUAL DROGUE CHUTE RELEASE

1. CREWMEMBER BELOW 14,000 FT., NO MAIN CANOPY
2. PULL DROGUE CHUTE RELEASE KNOB, RELEASE THREE-RING RELEASE ASSEMBLY
3. SEQUENCE SAME AS 7-8 ABOVE

Main Canopy

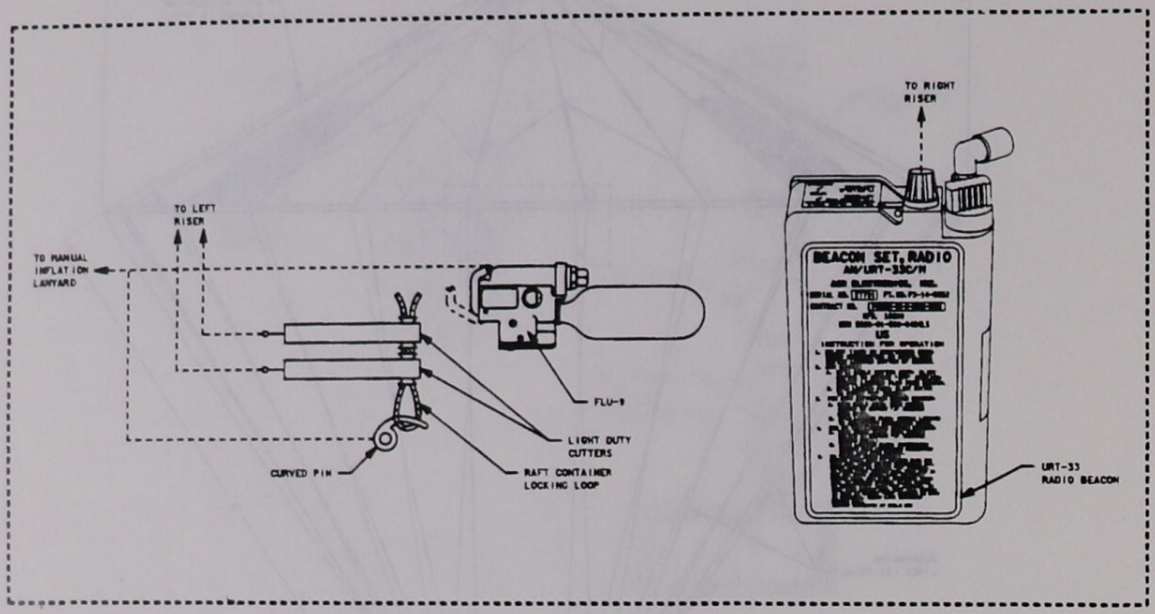

Life Raft Container Detail

Crew Escape System Pyrotechnics

The hardware associated with in-flight crew escape consists of several types of pyrotechnics plus the egress pole. The crew escape system pyrotechnics consist of a box with T-handle initiators, a pyro vent valve, and hatch pyrotechnics.

The T-handle box, containing two T-handles, is located on the port forward middeck floor. The aft T-handle activates the pyro vent valve to depressurize the cabin. The forward T-handle jettisons the side hatch. Both T-handles have safing pins through them that must be removed before the handles can be squeezed and pulled. The handles are connected to the pyro vent valve and the side hatch pyrotechnics via dual lengths of shielded detonating cord. The handles, pyrotechnics, and detonating cord do not require orbiter power.

The pyro vent valve is located behind the waste management compartment, on the port side of the aft bulkhead of the middeck. The purpose of the valve is to depressurize the cabin at a controlled rate prior to jettisoning the side hatch in flight. This is necessary to prevent severe buckling of the middeck floor, which would occur if the side hatch were jettisoned without any attempt to equalize the inside and outside pressure. When activated by squeezing and pulling the aft T-handle, the pyro vent valve opens a 15-square-inch hole between the crew compartment and the payload bay. If it is opened at an altitude of 40,000 feet, approximately 75 seconds are required to lower the pressure in the cabin to that of the ambient air outside the orbiter. Equalization would occur at approximately 31,000 feet. The cabin vent pyros are an ignition source in the payload bay and should not be used for post landing egress.

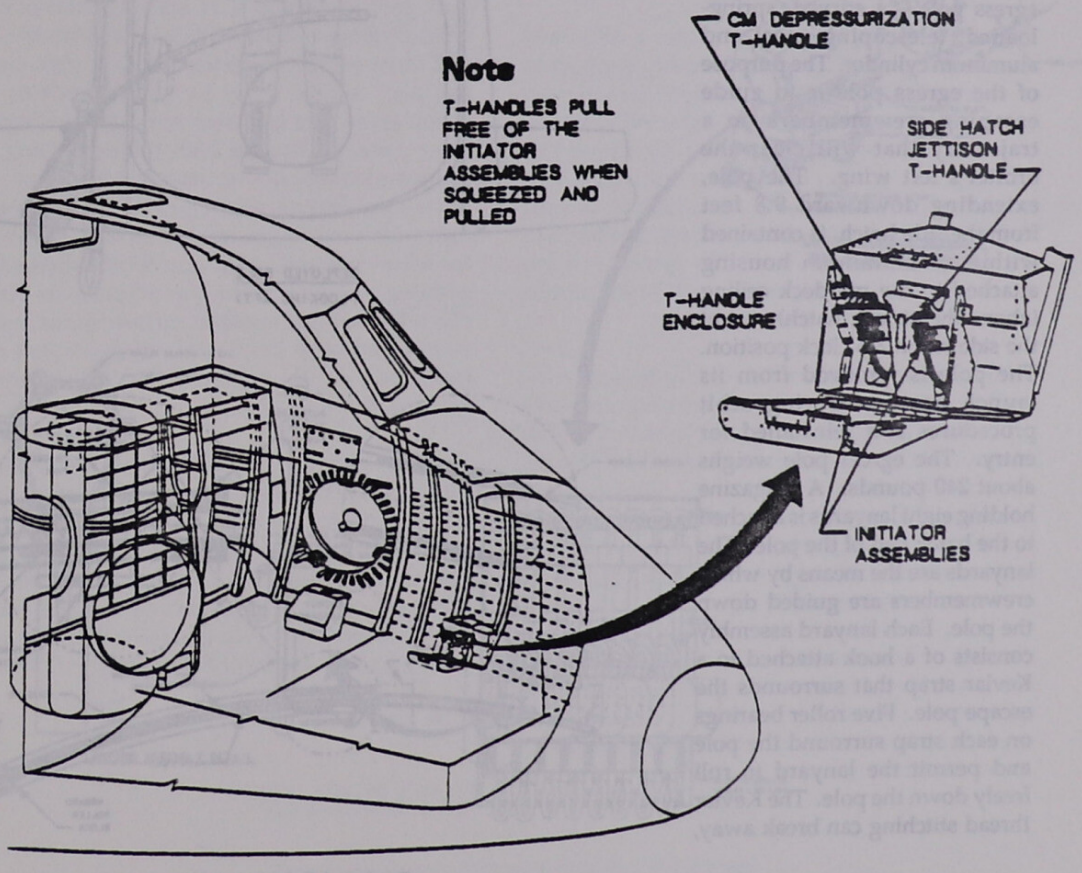

Emergency Crew Module Depressurization and Side Hatch Jettison T-Handles

Three separate sets of pyrotechnics are associated with the side hatch, all of which are activated simultaneously by squeezing and pulling the forward T-handle. A total of four linear-shaped charges (two per hinge for redundancy) are planted in the side hatch to sever the hinges. Two (redundant) expanding tube assemblies are included to sever the 70 frangible bolts holding the hatch adapter ring to the orbiter. Three (partially redundant) thruster packs are used to separate the hatch from the orbiter at a velocity of approximately 45 ft/sec. Note that the hatch jettison features could be used in a landing emergency.

Egress Pole System

The crew escape system orbiter-based hardware also includes the egress pole – a curved, spring-loaded, telescoping, steel and aluminum cylinder. The purpose of the egress pole is to guide escaping crewmembers on a trajectory that will clear the orbiter's left wing. The pole, extending downward 9.8 feet from the side hatch, is contained within an aluminum housing attached to the middeck ceiling (above the airlock hatch) and at the side hatch 2-o'clock position. The pole is removed from its launch position during orbit procedures and reinstalled for entry. The egress pole weighs about 240 pounds. A magazine holding eight lanyards is attached to the hatch end of the pole. The lanyards are the means by which crewmembers are guided down the pole. Each lanyard assembly consists of a hook attached to a Kevlar strap that surrounds the escape pole. Five roller bearings on each strap surround the pole and permit the lanyard to roll freely down the pole. The Kevlar thread stitching can break away,

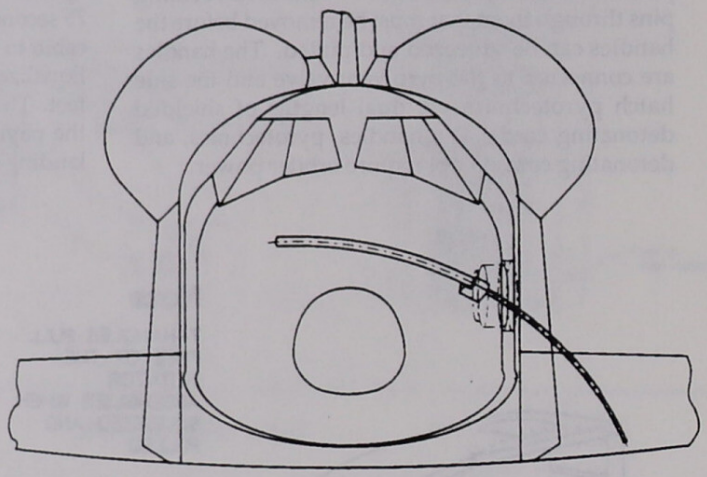

DEPLOYED POLE
(LOOKING AFT)

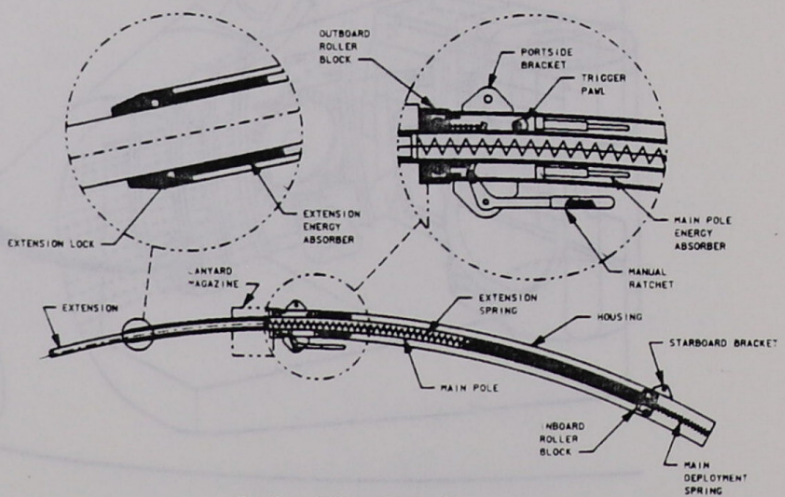

Deployed Pole Assembly

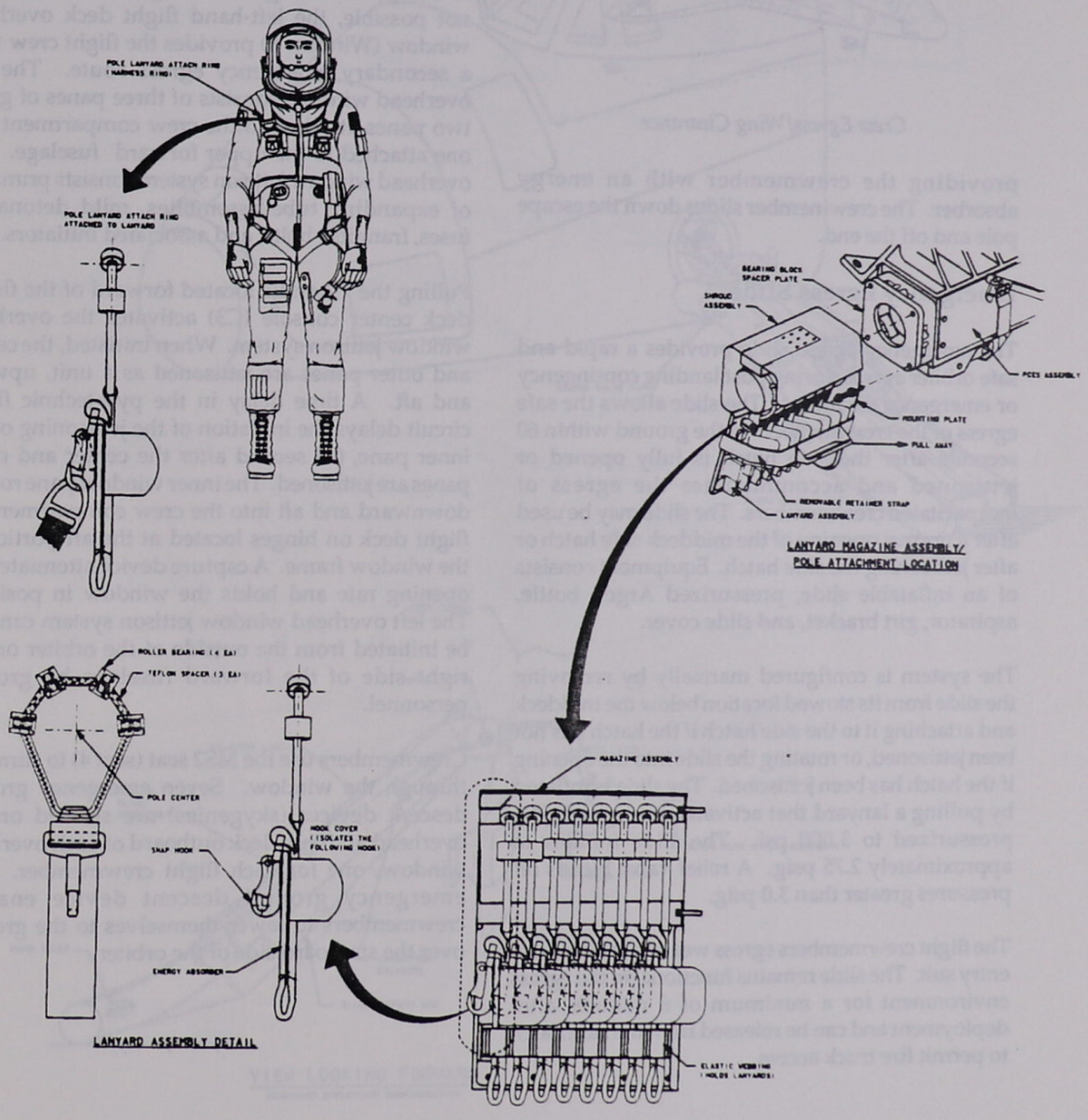

Lanyard Magazine Assembly

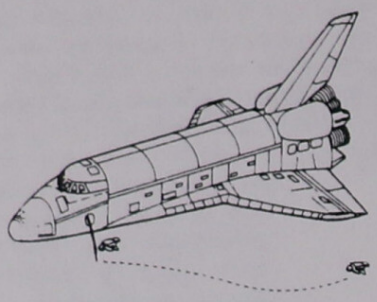

Crew Egress/Wing Clearance

providing the crewmember with an energy absorber. The crewmember slides down the escape pole and off the end.

Emergency Egress Slide

The emergency egress slide provides a rapid and safe orbiter egress during post landing contingency or emergency situations. The slide allows the safe egress of the crewmembers to the ground within 60 seconds after the side hatch is fully opened or jettisoned and accommodates the egress of incapacitated crewmembers. The slide may be used after a normal opening of the middeck side hatch or after jettisoning the side hatch. Equipment consists of an inflatable slide, pressurized Argon bottle, aspirator, girt bracket, and slide cover.

The system is configured manually by removing the slide from its stowed location below the middeck and attaching it to the side hatch if the hatch has not been jettisoned, or rotating the slide into the opening if the hatch has been jettisoned. The slide is inflated by pulling a lanyard that activates an Argon bottle pressurized to 3,000 psi. The slide inflates to approximately 2.75 psig. A relief valve bleeds off pressures greater than 3.0 psig.

The flight crewmembers egress wearing their launch entry suit. The slide remains functional in the egress environment for a minimum of 6 minutes after deployment and can be released from the side hatch to permit fire truck access.

The emergency egress slide replaces the emergency egress side hatch bar, which required the flight crewmembers to drop approximately 10.5 feet to the ground. This drop could cause injury to the flight crew and prevent an injured crewmember from moving to a safe distance from the orbiter.

Secondary Emergency Egress

In the event that egress through the side hatch is not possible, the left-hand flight deck overhead window (Window 8) provides the flight crew with a secondary emergency egress route. The left overhead window consists of three panes of glass, two panes attached to the crew compartment and one attached to the upper forward fuselage. The overhead window jettison system consists primarily of expanding tube assemblies, mild detonating fuses, frangible bolts, and associated initiators.

Pulling the T-handle located forward of the flight-deck center console (C3) activates the overhead window jettison system. When initiated, the center and outer panes are jettisoned as a unit, upward and aft. A time delay in the pyrotechnic firing circuit delays the initiation of the jettisoning of the inner pane, 0.3 second after the center and outer panes are jettisoned. The inner window pane rotates downward and aft into the crew compartment aft flight deck on hinges located at the aft portion of the window frame. A capture device attenuates the opening rate and holds the window in position. The left overhead window jettison system can also be initiated from the outside of the orbiter on the right side of the forward fuselage by ground personnel.

Crewmembers use the MS2 seat (seat 4) to climb up through the window. Seven emergency ground descent devices (skygenies) are stowed on the overhead aft flight deck outboard of each overhead window, one for each flight crewmember. The emergency ground descent device enables crewmembers to lower themselves to the ground over the starboard side of the orbiter.

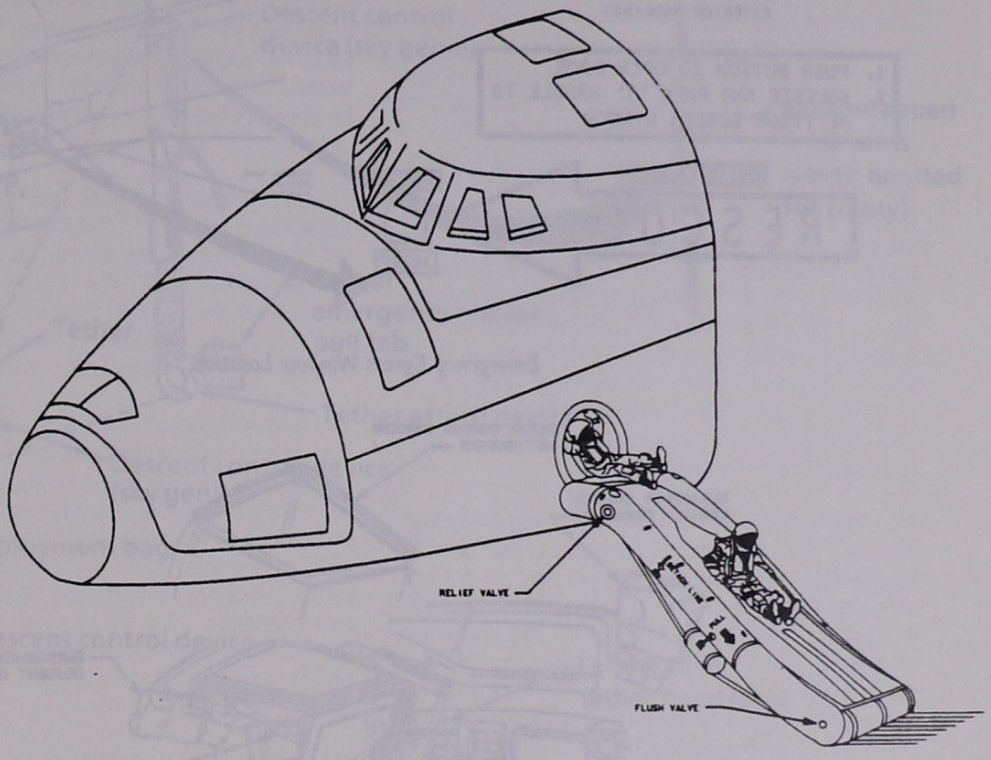

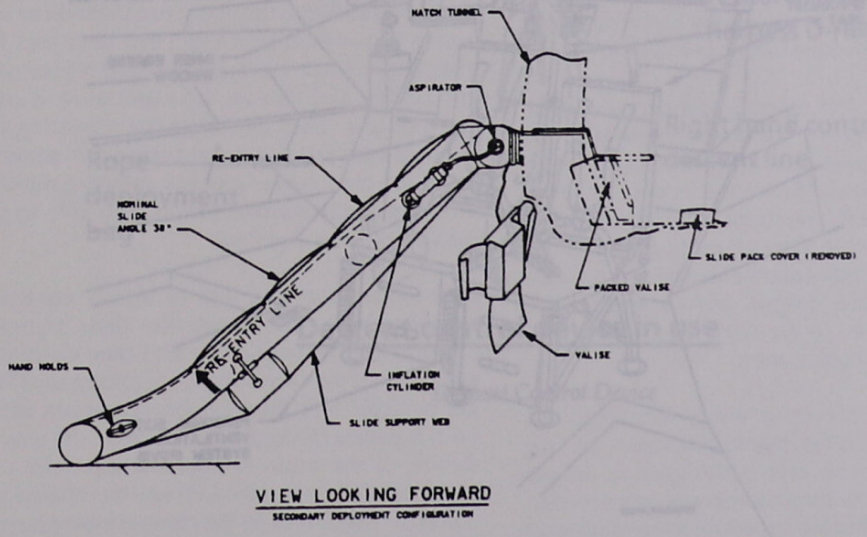

Emergency Egress Slide with Side Hatch Jettisoned

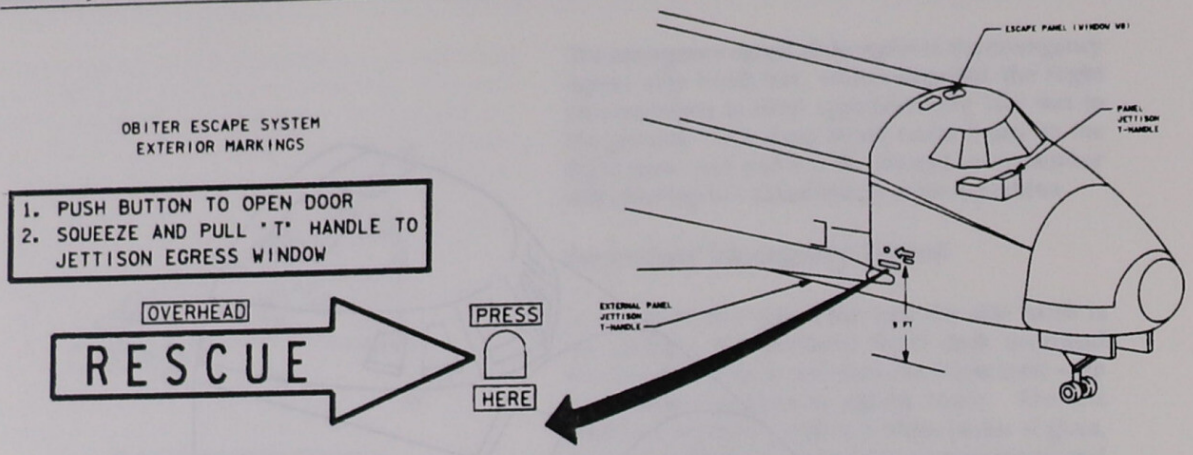

Emergency Egress Window Location

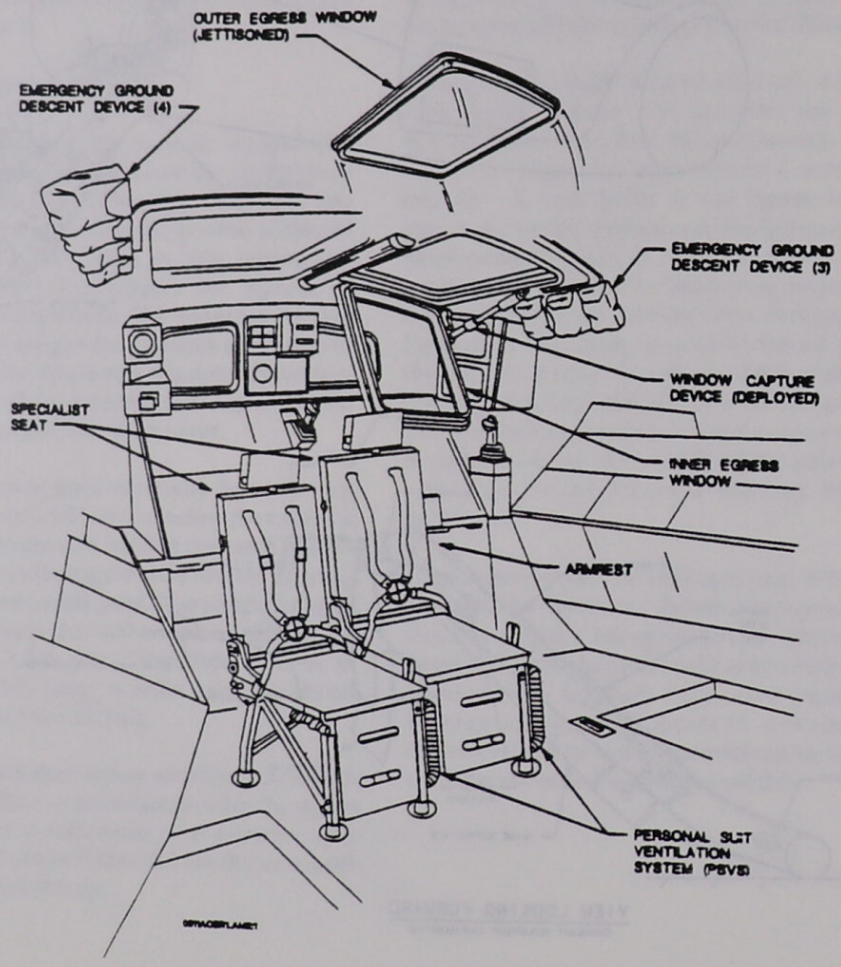

Overhead Egress Window Jettisoned

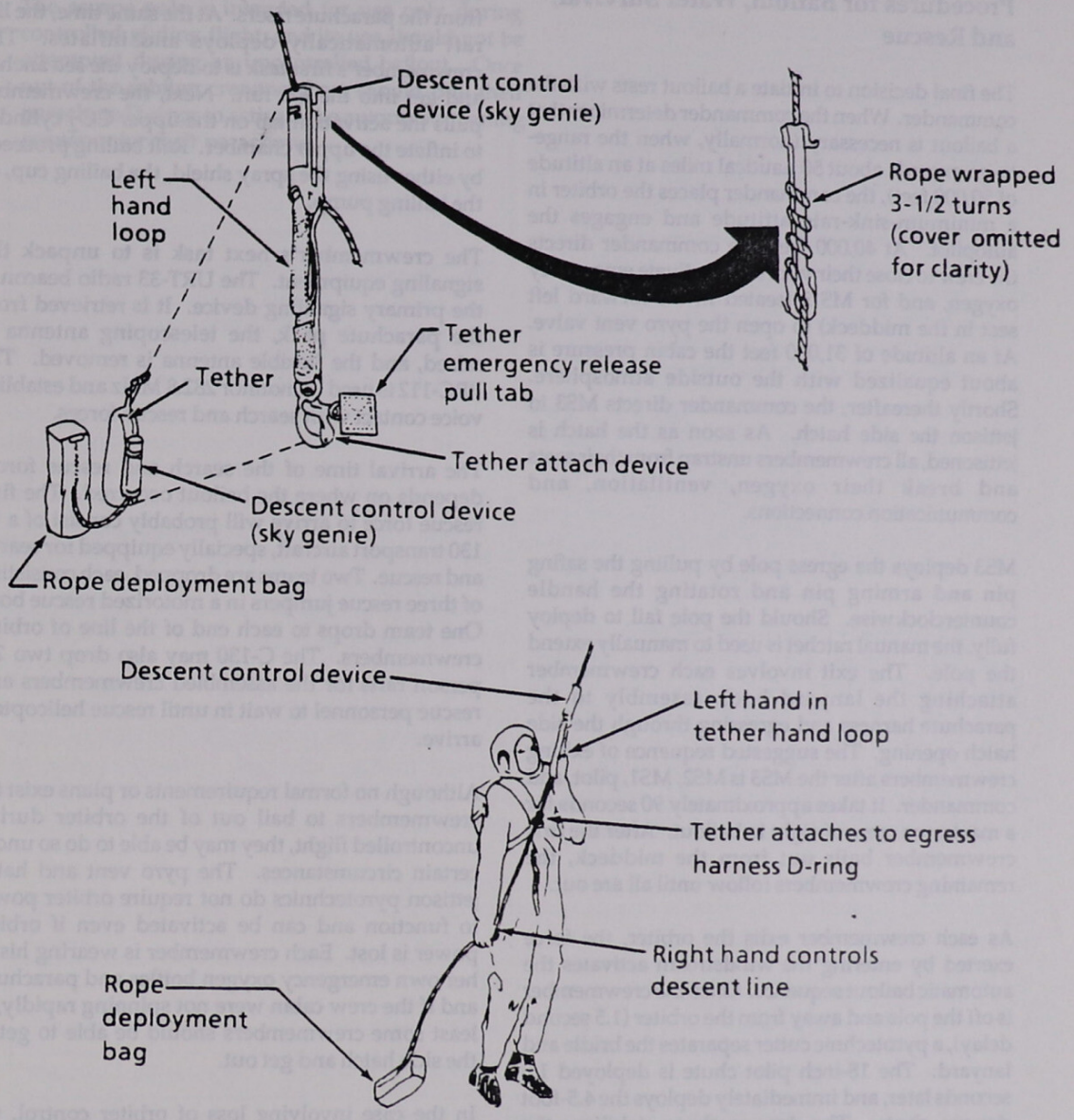

Descent control device in use

Descent Control Device

Procedures for Bailout, Water Survival, and Rescue

The final decision to initiate a bailout rests with the commander. When the commander determines that a bailout is necessary (normally, when the range-to-go exceeds about 50 nautical miles at an altitude of 50,000 feet), the commander places the orbiter in a minimum-sink-rate attitude and engages the autopilot. At 40,000 feet, the commander directs the crew to close their visors and activate emergency oxygen, and for MS 3 (seated in the forward left seat in the middeck) to open the pyro vent valve. At an altitude of 31,000 feet the cabin pressure is about equalized with the outside atmosphere. Shortly thereafter, the commander directs MS3 to jettison the side hatch. As soon as the hatch is jettisoned, all crewmembers unstrap from their seats and break their oxygen, ventilation, and communication connections.

MS3 deploys the egress pole by pulling the safing pin and arming pin and rotating the handle counterclockwise. Should the pole fail to deploy fully, the manual ratchet is used to manually extend the pole. The exit involves each crewmember attaching the lanyard hook assembly to the parachute harness and egressing through the side hatch opening. The suggested sequence of exiting crewmembers after the MS3 is MS2, MS1, pilot, and commander. It takes approximately 90 seconds for a maximum crew of eight to bailout. After the first crewmember bails out from the middeck, the remaining crewmembers follow until all are out.

As each crewmember exits the orbiter, the force exerted by entering the windstream activates the automatic bailout sequence. Once the crewmember is off the pole and away from the orbiter (1.5 second delay), a pyrotechnic cutter separates the bridle and lanyard. The 18-inch pilot chute is deployed 1.5 seconds later, and immediately deploys the 4.5-foot drogue chute. The drogue chute stabilizes the crewmember down to an altitude of 14,000 feet, then deploys the main canopy.

Immediately prior to a water landing, the crewmember pulls the manual inflation tab life preserver unit. The unit is designed to inflate automatically upon immersion in any type of water, but should be activated manually as an additional safeguard. Upon landing in saltwater, the SEAWARS automatically releases the crewmember from the parachute risers. At the same time, the life raft automatically deploys and inflates. The crewmember's first task is to deploy the sea anchor and get into the life raft. Next, the crewmember pulls the activation tab on the upper CO_2 cylinder to inflate the upper chamber. Raft bailing proceeds by either using the spray shield, the bailing cup, or the bailing pump.

The crewmember's next task is to unpack the signaling equipment. The URT-33 radio beacon is the primary signaling device. It is retrieved from the parachute pack, the telescoping antenna is raised, and the flexible antenna is removed. The PRC-112 is used to monitor 282.8 MHz and establish voice contact with search and rescue forces.

The arrival time of the search and rescue forces depends on where the bailout occurred. The first rescue force to arrive will probably consist of a C-130 transport aircraft, specially equipped for search and rescue. Two teams are dropped, each consisting of three rescue jumpers in a motorized rescue boat. One team drops to each end of the line of orbiter crewmembers. The C-130 may also drop two 20-person rafts for the assembled crewmembers and rescue personnel to wait in until rescue helicopters arrive.

Although no formal requirements or plans exist for crewmembers to bail out of the orbiter during uncontrolled flight, they may be able to do so under certain circumstances. The pyro vent and hatch jettison pyrotechnics do not require orbiter power to function and can be activated even if orbiter power is lost. Each crewmember is wearing his or her own emergency oxygen bottles and parachute, and if the crew cabin were not spinning rapidly, at least some crewmembers should be able to get to the side hatch and get out.

In the case involving loss of orbiter control, the crewmembers should activate their emergency oxygen as soon as possible and then evaluate the situation. If the crew module is lofting to altitudes above 40,000 feet, the crew should remain within it until it passes through 40,000 feet on the way back down. If the cabin is depressurized, the partial pressure bladders in the LES will be inflated above 35,000 to 38,000 feet, so the crewmembers can judge altitude in that way.

The escape pole is intended for use only during controlled gliding flight, and its use should not be attempted during an uncontrolled bailout. Once out of the orbiter, crewmembers should pull their parachute D-rings to activate the automatic opening sequence for their parachutes.

Escape Systems Summary Data

- Escape systems refer to equipment and systems intended to facilitate emergency egress of the flight crew. Escape systems include equipment worn by the crewmembers, hardware built into the orbiter, and external systems located on the launch pad.
- Escape by the flight crew on the launch pad is facilitated by descending to a safe area via slidewire baskets. The launch pad structure also includes an escape temperature and hydrogen fire-hazard monitoring system and a Firex spray system for water shower .
- The launch entry suit is designed to protect crewmembers from (1) loss of cabin pressure and/or orbiter oxygen at altitudes of up to 100,000 feet, (2) cold atmospheric and/or water temperatures after bailing out, (3) pooling of blood in the lower body, and (4) contaminated atmosphere during flight or post-landing procedures.
- The personal parachute assembly is worn by the crew in the event of bailout. It is designed to work automatically with the crew egress pole system or with manual backups as needed.
- The hardware associated with the orbiter for purposes of in-flight crew escape consists of several types of pyrotechnics plus the egress pole.
- Three separate sets of pyrotechnics are associated with jettisoning the side hatch, all of which are activated simultaneously by squeezing and pulling a T-handle.
- The purpose of the egress pole is to guide escaping crewmembers on a trajectory that will clear the orbiter's left wing.
- The emergency egress slide is intended for use after a normal opening of the middeck side hatch or after jettisoning of the side hatch at the nominal end-of-mission landing site or at a remote or emergency landing site.
- In the event that egress through the side hatch is not possible, the left-hand flight deck overhead window (W8) provides the flight crew with a secondary emergency egress route.
- The commander may decide a bailout is necessary, if the range-to-go exceeds about 50 nautical miles at an altitude of 50,000 feet. The orbiter is placed in a minimum-sink-rate attitude on autopilot.
- Bailout includes using the escape pole to leave the orbiter, deploying the parachute for descent, and inflating the life raft for a water recovery. Special survival gear and procedures are provided in the case of a bailout.

2.11 EXTRAVEHICULAR ACTIVITY (EVA)

CONTENTS

Description 2.11-1
Extravehicular Mobility Unit 2.11-3
Airlock 2.11-11
EVA Support Equipment 2.11-15
Manned Maneuvering Unit 2.11-17
Operations 2.11-19

Description

The Space Shuttle Program extends previous EVA capabilities by using a space suit with added mobility, as well as the opportunity for propulsive maneuvering independent of the orbiter. The current space suit, designed for a total maximum duration of 7 hours, provides environmental protection, mobility, life support, and communications. Two suits are included in each baseline orbiter mission, and consumables are provided for three two-person, 6-hour EVAs. Two EVAs are available for payload use, with the third reserved for orbiter contingency operations. EVA has been demonstrated to be useful in three main categories: satellite repair, satellite retrieval, and satellite refueling. To date there have been 15 Shuttle EVAs (13 scheduled and two unscheduled) totaling 136.5 man-hours.

There are three basic categories of EVA: scheduled, unscheduled, and contingency. A scheduled EVA is defined as any EVA incorporated into the normal flight plan in order to complete a specific mission objective. An unscheduled EVA is not part of the flight plan; rather, it is conducted to achieve payload operation success or to advance overall mission accomplishments. A contingency EVA is also unscheduled, but is required to ensure safe return of the orbiter and flight crew.

A subcategory of scheduled EVA is the quick-response EVA. A quick-response EVA must be performed within a few hours after a problem is discovered, and it is usually associated with payload deployment. Quick-response EVAs are planned pre-flight, and the crew prepares for the EVA even though it may not be performed.

Extravehicular activities are classified according to level of complexity: simple, intermediate, or complex. A simple payload EVA requires minimal unique tools, mockups, or mobility aids. Existing procedures and techniques may be adapted to particular EVA needs, thus requiring minimal crew training. An intermediate payload EVA requires development of new tools and equipment. Some

Space Shuttle EVA Chronology

MISSION	DATE	PURPOSE OF EVA	EVA CREW	# EVA/ MISSION	DURATION: MAN-HOURS*
STS-6	APR 4-9, 83	System Functional Demo	Musgrave/Peterson	1	7 hr, 48 min
STS-41B	FEB 3-11, 84	MMU Capability Demo	McCandless/Stewart	2	23 hr, 14 min
STS-41C	APR 6-13, 84	Solar Max Satellite Repair	van Hoften/Nelson	2	20 hr, 12 min
STS-41G	OCT 5-13, 84	Orbiter Fuel Transfer Demo	Leestma/Sullivan	1	6 hr, 58 min
STS-51A	NOV 8-16, 84	Westar/Palapa Satellite Retrieval	Allen/Gardner	2	24 hr, 28 min
STS-51D	APR 12-19, 85	Syncom F3 Satellite Repair	Hoffman/Griggs	1	6 hr, 20 min
STS-51I	AUG 27-SEP 3, 85	Syncom F3 Satellite Repair	van Hoften/Fisher	2	24 hr, 42 min
STS-61B	NOV 26-DEC 3, 85	Large Structure Assembly	Ross/Spring	2	24 hr, 40 min
STS-37	APR 5-10, 91	GRO Satellite Repair/Locomotion Studies	Ross/Apt	2	20 hr, 48 min

* Includes preparation time

procedure and technique development is required, with more extensive training necessary. A complex payload EVA requires the design and development of complex or elaborate tools and equipment. The tasks require extension of basic capabilities and may pose difficulty in access or restraint. Procedure and technique development is extensive, as are crew training requirements.

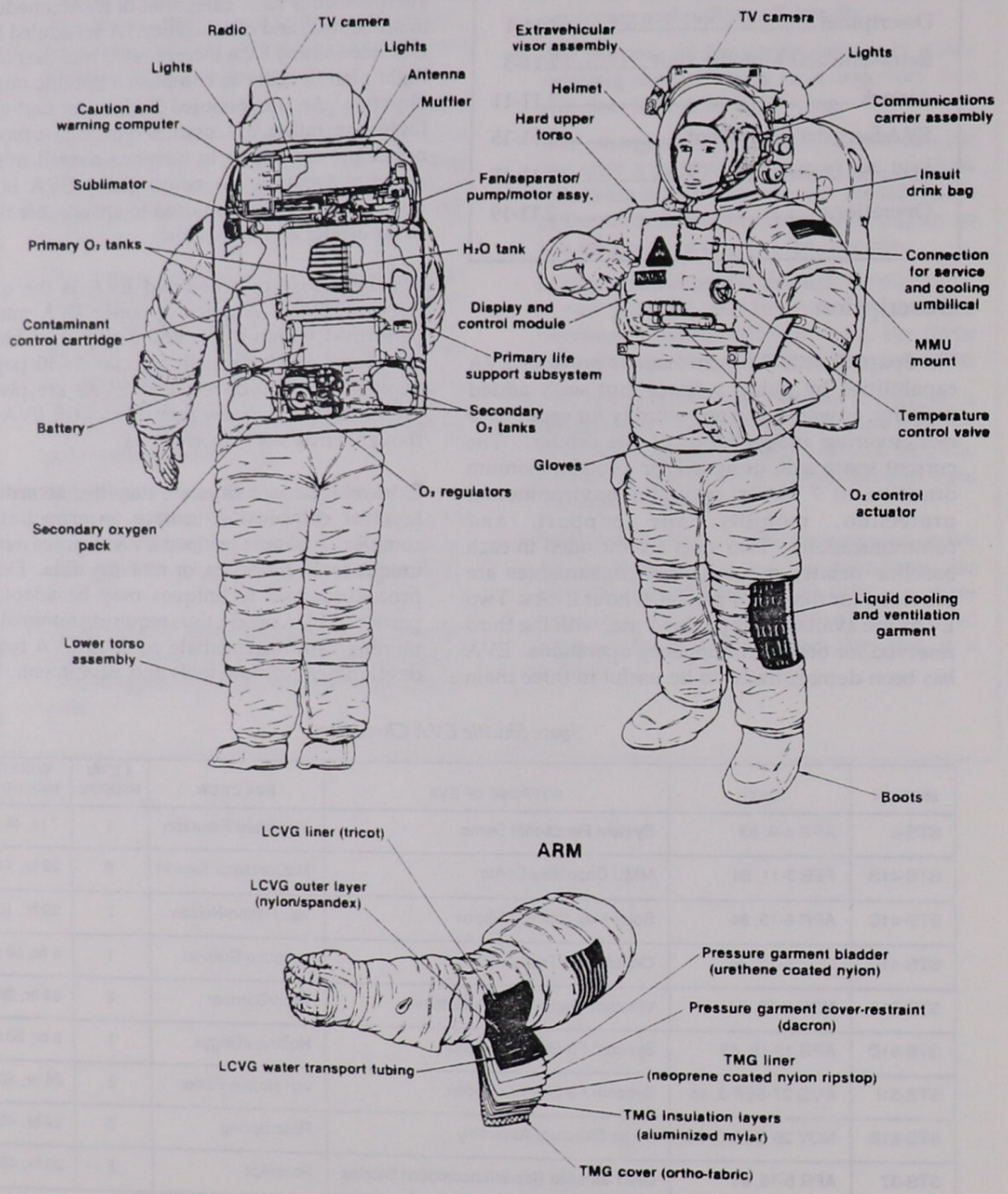

Extravehicular Mobility Unit

Extravehicular Mobility Unit

The extravehicular mobility unit (EMU) is an independent anthropomorphic system that provides environmental protection, mobility, life support, and communications for the crewmember to perform EVA in Earth orbit. For EMU design considerations, an EVA is defined as any time the EMU external environmental pressure is below 4.0 psia. The EMU is designed to accommodate an EVA mission with a total maximum duration of 7 hours, consisting of 15 minutes for egress, 6 hours for useful EVA tasks, 15 minutes for ingress, and a 30-minute reserve. The EMU also accommodates specific metabolic rate limits, including (1) an average metabolic rate not exceeding 1600 Btu/hr in any given EVA hour and not exceeding 1000 Btu/hr for the entire duration, (2) a peak metabolic rate not exceeding 2000 Btu/hr for a period of 15 minutes, and (3) a minimum metabolic rate not less than 400 Btu/hr for a period of 30 minutes. The EMU is an integrated assembly, primarily composed of the space suit assembly, life support system, and numerous items of associated support and ancillary equipment.

Space Suit Assembly

The space suit assembly (SSA) is the anthropomorphic pressure vessel that encloses the crewmember's torso, limbs, and head. The SSA provides a variety of functions while the crewmember performs an EVA, including suit pressure retention, crewmember mobility, crewmember liquid cooling distribution, oxygen ventilation gas circulation, downlink of crewmember's electrocardiogram data via EMU radio, crewmember interface with EMU radio, crewmember in-suit drinking water, and urine containment. The SSA operates under specific pressure requirements and leakage criteria.

The space suit assembly consists of the following:

- Hard upper torso/arms
- Lower torso assembly
- Extravehicular gloves
- Helmet/extravehicular visor assembly
- Liquid cooling and ventilation garment
- Operational bioinstrumentation system
- Communications carrier assembly
- In-suit drink bag
- Urine collection device
- Disposable absorption containment trunk.

The hard upper torso (HUT) provides pressure containment for the upper torso as well as being the central component from which the mechanical, electrical, and fluid interfaces of the EMU branch. The HUT is available in four sizes to accommodate 5th through 95th percentile-sized crewmembers. The HUT includes the following components: fiberglass shell (with water tubes and oxygen ducts), assorted mounting brackets, waterline and vent tube assembly, multiple water connector, EMU electrical harness, shoulder bearing assemblies, waist disconnect ring (passive half), helmet disconnect ring, and thermal micrometeoroid garment (TMG). The right and left arm assemblies are flexible, anthropomorphic pressure vessels that encompass the arms. Each arm assembly includes the following components: upper arm assembly, rotating scye bearing, lower arm assembly, rotating arm bearing, wrist disconnect ring, urethane pressure bladders, cloth restraint systems, and TMGs for the upper and lower arm assemblies.

The lower torso assembly (LTA) consists of a flexible anthropomorphic pressure vessel that encompasses the waist, lower torso, legs, and feet. The LTA includes the following components: waist assembly, waist disconnect ring, trouser assembly, rotating waist bearing between the waist and trouser assemblies, boot assembly, urethane pressure bladders, cloth restraint systems, and TMGs for the waist, trouser, and boot assemblies.

The extravehicular gloves consist of a detachable, flexible pressure vessel, encompassing each hand for use during EVA. The extravehicular gloves include the following components: urethane pressure bladder and cloth restraint system, wrist disconnect ring with rotating wrist bearing, wrist gimbal ring, adjustable palm restraint bar/strap, wrist tether strap, and TMG with palm restraint bar and wristwatch protective flaps. The current 4000 series gloves incorporate a standard nine-size system to size the gloves for a comfortable fit. The glove fingers use a sizing feature that consists of a pair of polyester dacron cords to provide finger length adjustments. Customized gloves can be manufactured for the crewmember if a proper fit cannot be obtained from the standard size glove.

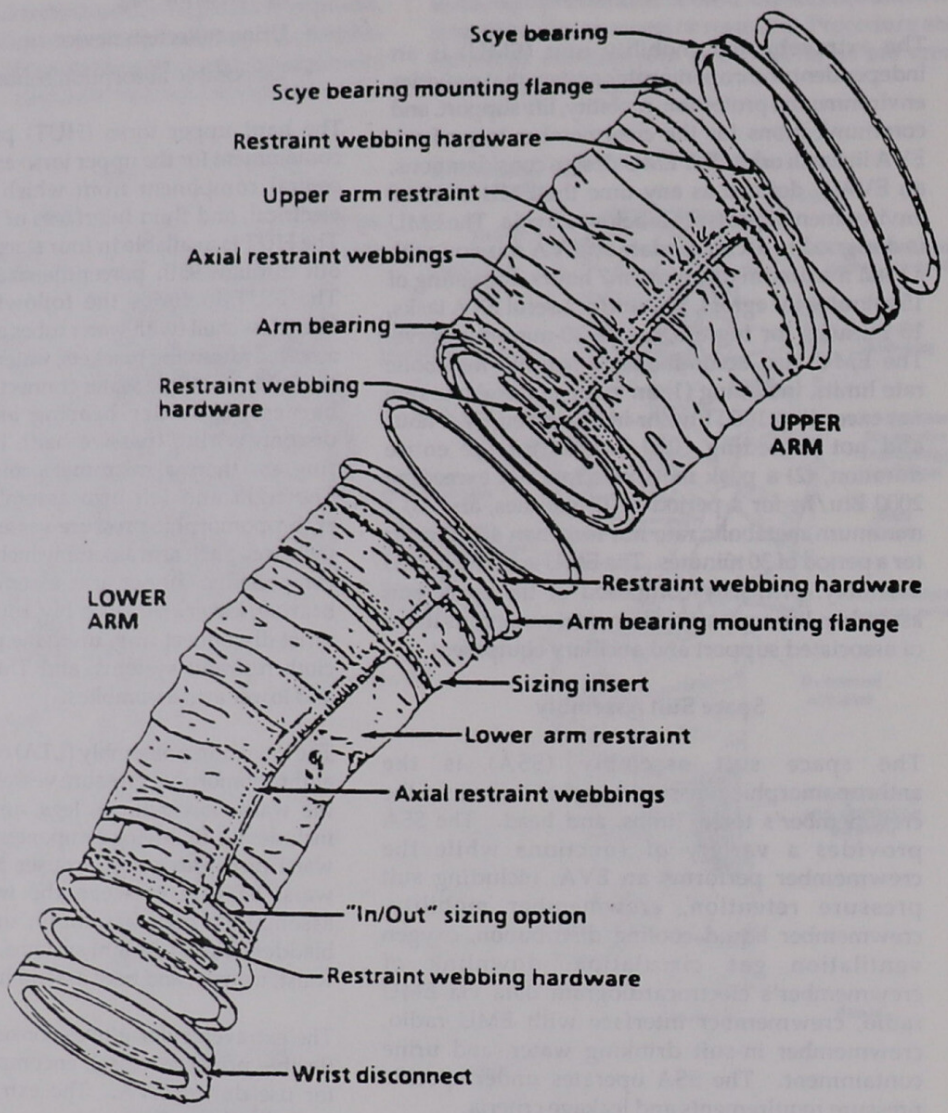

SSA Arm Assembly

The helmet, a "one-size-fits-all" model, consists of a detachable, transparent, hard pressure vessel encompassing the head. The helmet includes the following components: hard transparent bubble, helmet disconnect ring, helmet purge valve, and vent pad. Two crew optional items are also available for the helmet. One of these items is the Fresnel lens, which is mounted to the lower front inside of the helmet to improve display control module visibility for the crewmember. The other item is the valsalva device, attached to the inside of the bubble, which allows the crewmember to clear his or her ears during pressure changes. The extravehicular visor assembly (EVVA) attaches to the helmet to provide the crewmember with visual, thermal, impact, and micrometeoroid protection. The EVVA includes the following components: clear protective

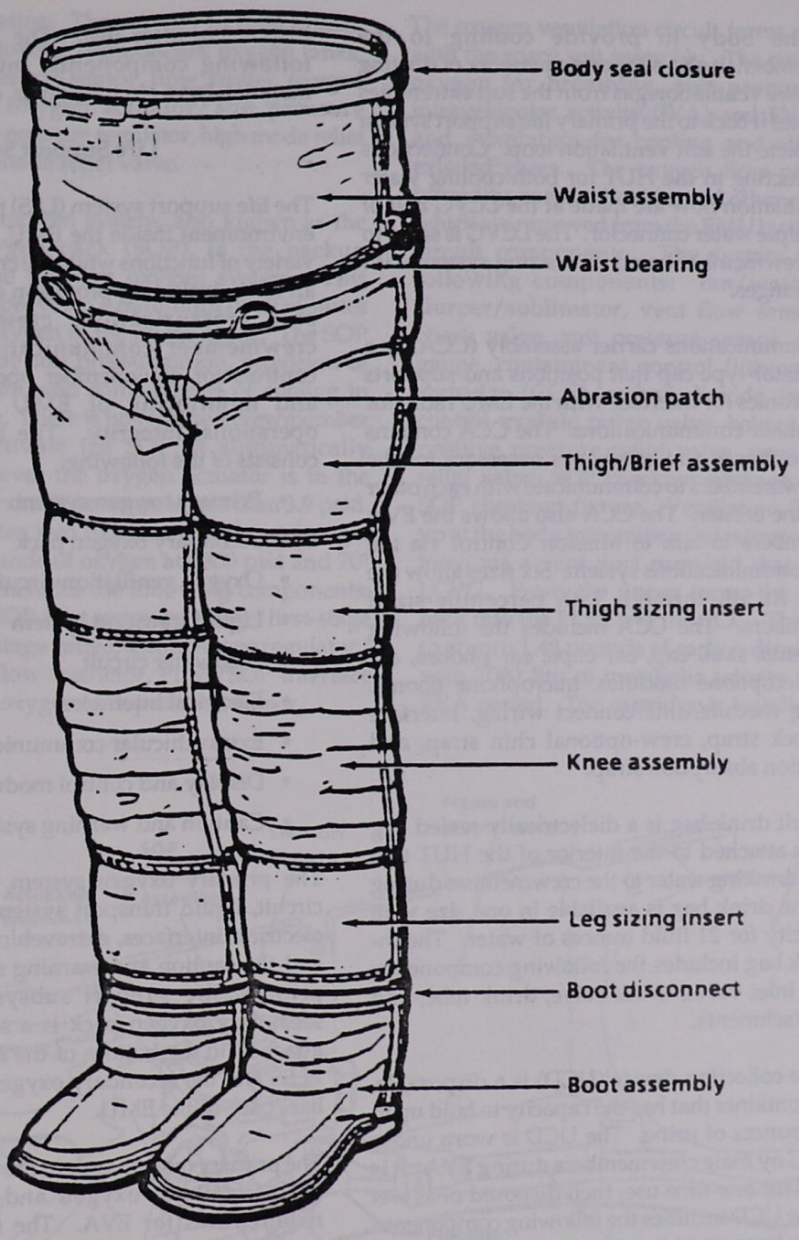

Lower Torso Assembly with TMG Removed

visor, sun visor, center and side eyeshades, fiberglass shell, and latch mechanisms and supporting structure for the visor and eyeshades.

The liquid cooling and ventilation garment (LCVG) is a form-fitting elastic garment worn against the crewmember's body. The LCVG includes the following components: outer restraint fabric, inner liner assembly, crew optional comfort pads, biomed pocket, dosimeter pocket, water tubing network, paramanifold assembly, ventilation ducting network, vent plenum assembly, multiple water connector, and full torso zipper. The garment supports a network of tubing that circulates water

over the body to provide cooling to the crewmember. It also supports a network of ducting that draws ventilation gas from the suit extremities and routes it back to the primary life support system to complete the suit ventilation loop. Connections to the ducting in the HUT for both cooling water and ventilation flow are made at the LCVG half of the multiple water connector. The LCVG is sized to fit the crewmember based on a sizing system with six size ranges.

The communications carrier assembly (CCA) is a cloth aviator-type cap that positions and supports the electronics for interface with the EMU radio for crewmember communications. The CCA contains the microphones and earphones necessary for the EVA crewmembers to communicate with each other or with the orbiter. The CCA also allows the EVA crewmembers to talk to Mission Control via the orbiter communications system. Six sizes allow the CCA to fit 5th through 95th percentile-sized crewmembers. The CCA includes the following components: skull cap, ear cups, ear phones, ear seals, microphone modules, microphone booms, summing module, interconnect wiring, interface cable, neck strap, crew-optional chin strap, and perspiration absorption strap.

The in-suit drink bag is a dielectrically sealed bag assembly attached to the interior of the HUT that supplies drinking water to the crewmember during EVA. The drink bag is available in one size with the capacity for 21 fluid ounces of water. The in-suit drink bag includes the following components: bladder, inlet valve, drink valve, drink tube, and velcro attachments.

The urine collection device (UCD) is a disposable, flexible container that has the capacity to hold up to 32 fluid ounces of urine. The UCD is worn under the LCVG by male crewmembers during EVA. It is designed for one-time use, then disposed of as wet trash. The UCD includes the following components: collection bag, attachment straps, one-way check valve, and disposable roll-on cuff.

The disposable absorption containment trunk (DACT) consists of multiple layers of material designed to rapidly absorb and store urine. The DACT is designed to be worn under the LCVG by female crewmembers during EVA. It has the capacity to hold 32 fluid ounces of urine and is disposable after use. The DACT includes the following components: multilayer absorbent material, lycra stretch panels, and side zipper.

Life Support System

The life support system (LSS) provides a safe living environment inside the EMU. The LSS provides a variety of functions while the crewmember performs an EVA, including provision of breathing oxygen, suit pressurization, crewmember cooling, crewmember communications, displays and controls for crewmember operation of the EMU, and monitoring of EMU consumables and operational integrity. The life support system consists of the following:

- Primary oxygen system
- Secondary oxygen pack
- Oxygen ventilation circuit
- Liquid transport system
- Feedwater circuit
- Electrical interfaces
- Extravehicular communicator (EMU radio)
- Display and control module
- Caution and warning system.

The primary oxygen system, oxygen ventilation circuit, liquid transport system, feedwater circuit, electrical interfaces, extravehicular communicator, and the caution and warning system make up the primary life support subsystem (PLSS). The secondary oxygen pack is a separate unit that is attached to the bottom of the PLSS. Together, the PLSS and the secondary oxygen pack make up the backpack of the EMU.

The primary oxygen system provides a crewmember with breathing oxygen and satisfies pressure requirements for EVA. The system stores 1.217 pounds of oxygen at 850 psia and 90° F. It delivers oxygen during EVA at 4.3 ± 0.1 psid, and maintains a metabolic use rate range of 0.02 to 0.33 lb/hr. The system is charged through a common multiple connection to the orbiter environmental control and life support system. Charging pressure is 850 ± 50 psig. The minimum usable pressure is 60 psi. The system performs various functions, including suit pressurization, provision of breathing oxygen, and

water pressurization. The primary oxygen system includes the following components: oxygen tanks, oxygen tank pressure sensor, flow limiter, oxygen shutoff valve, oxygen actuator, suit pressure regulator, water pressure regulator, high mode relief valve, and low mode relief valve.

The secondary oxygen system, also known as the secondary oxygen pack (SOP), is the backup assembly to the primary oxygen system. This backup system provides a minimum of 30 minutes of emergency oxygen in the purge mode. The SOP functions include suit pressurization, provision of breathing oxygen, and some degree of cooling in the purge mode. There is no required crewmember interface to activate the SOP; it automatically activates whenever the oxygen actuator is in the EVA position and suit pressure is less than 3.9 psid. The SOP includes two oxygen tanks, containing a total of 2.65 pounds of oxygen at 5800 psia and 70° F. The system includes the following components: oxygen tanks, SOP inlet pressure gauge, first-stage regulator, interstage gauge, second-stage regulator/shutoff valve/flow restrictor, PLSS/SOP interface connector, and oxygen tank pressure sensor.

The oxygen ventilation circuit forms a closed loop with the space suit assembly. The circuit provides oxygen for breathing, suit pressurization for intravehicular activity (IVA) and EVA operation, and ventilation for cooling and elimination of exhaled gases. The oxygen flow picks up heat, humidity, carbon dioxide, and other contaminants, which are removed from the EMU by the ventilation circuit components. The system includes the following components: fan/water separator, slurper/sublimator, vent flow sensor/backflow check valve, suit pressure sensor, suit pressure gauge, contaminant control (lithium hydroxide) cartridge (CCC), carbon dioxide sensor, display control module purge valve, helmet purge valve, positive pressure relief valve, negative pressure relief valve, SOP checkout package, muffler, and SOP checkout fixture. Ventilation flow is picked up at the body extremities and returned to the upper torso via a vent duct manifold that is part of the LCVG. From the upper torso, the gas is routed back into the PLSS and the CCC. The CCC is sized to absorb 1.48 pounds of carbon dioxide associated with 7000 Btu of metabolic activity over a 7-hour EVA period. The cartridge is installed in the back

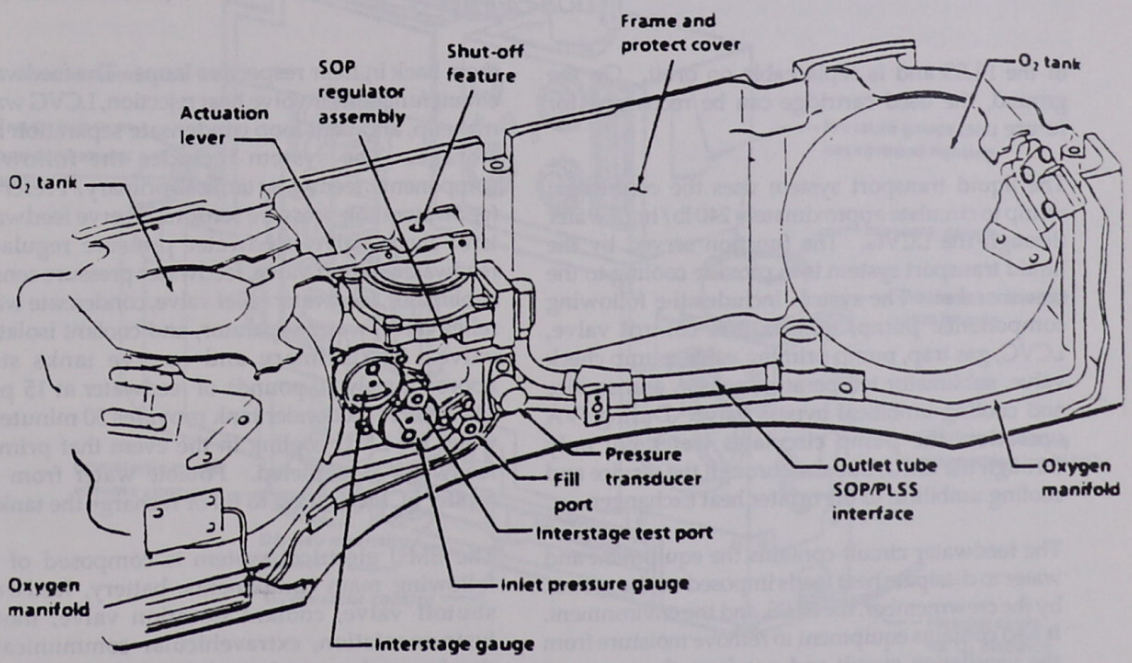

Secondary Oxygen Pack

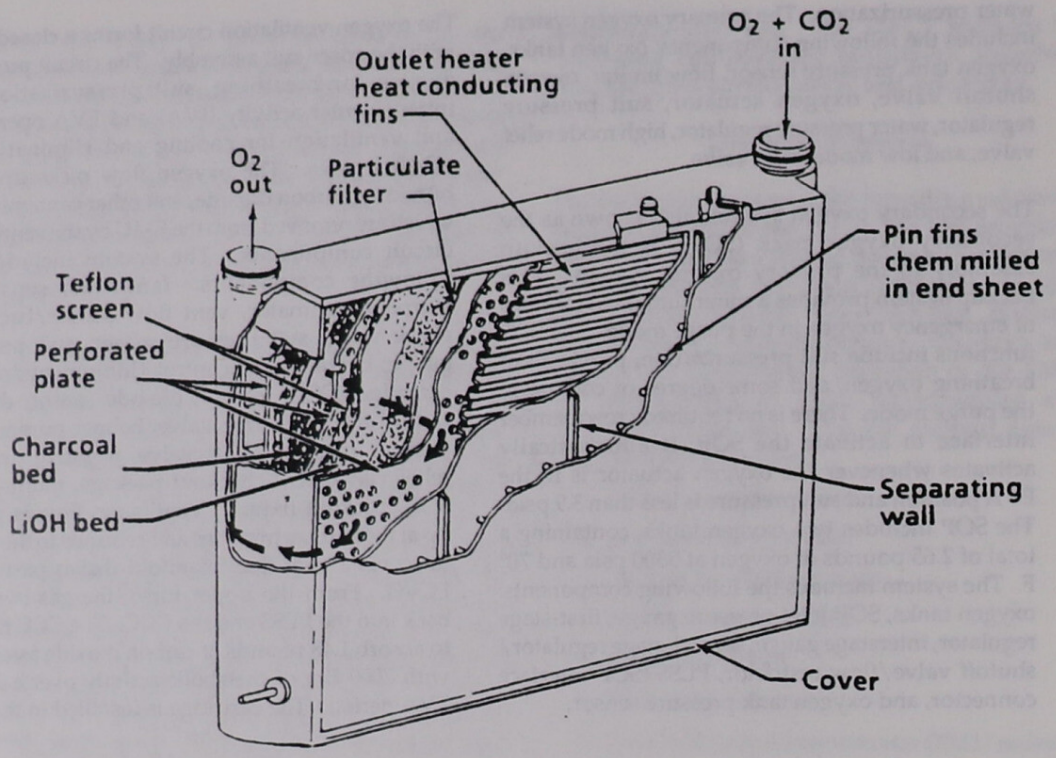

LiOH Cartridge

of the PLSS and is replaceable on orbit. On the ground, the used cartridge can be recharged for future use.

The liquid transport system uses the centrifugal pump to circulate approximately 240 lb/hr of water through the LCVG. The function served by the liquid transport system is to provide cooling to the crewmember. The system includes the following components: pump, temperature control valve, LCVG, gas trap, pump priming valve, pump check valve, sublimator temperature sensor, and service and cooling umbilical bypass valve. During IVA operation, the pump circulates water not only through the EMU, but also through the service and cooling umbilical to the orbiter heat exchanger.

The feedwater circuit contains the equipment and water to dissipate heat loads imposed on the system by the crewmember, the PLSS, and the environment. It also contains equipment to remove moisture from the ventilation circuit and gas from the transport circuit, to separate the water and gas, and to put them back in their respective loops. The feedwater circuit functions involve heat rejection, LCVG water makeup, and vent loop condensate separation and storage. The system includes the following components: feedwater tanks (2 primary/1 reserve), feedwater tank pressure sensors, reserve feedwater tank check valve, feedwater pressure regulator, feedwater shutoff valve, feedwater pressure sensor, sublimator, feedwater relief valve, condensate water relief valve, water separator, and coolant isolation valve. The primary and reserve tanks store approximately 10 pounds of feedwater at 15 psig. The reserve feedwater tank provides 30 minutes of water for EMU cooling in the event that primary feedwater is depleted. Potable water from the orbiter ECLSS is used to fill or recharge the tanks.

The EMU electrical system is composed of the following main components: battery, feedwater shutoff valve, coolant isolation valve, motor, instrumentation, extravehicular communicator, display and control module, and caution and warning system. Electrical interfaces exist between

the display and control module and parts of the PLSS, SOP, and C/W. The power supply for operation of all electrical components of the EMU is a battery installed in the back of the PLSS. The EMU battery consists of eleven sealed, silver-zinc, high current density cells connected in series. The battery provides a minimum of 26.6 amp-hr of power over a 7-hour EVA mission at a nominal voltage of 16.5 V dc.

The extravehicular communicator (EVC) is composed of two parts, the orbiter-based equipment and the EMU-based equipment. The orbiter equipment consists of the EVA/air traffic control transceivers and antennas. This configuration provides communication with the EVA crewmembers and relay between EVA crewmembers and the ground (including downlink ECG and real-time data system (RTDS) telemetry). The EMU equipment consists of the EMU radio and antenna. It provides voice communications with other EVA crewmembers and the orbiter, ECG/RTDS telemetry to the orbiter for recording and/or downlink, and caution and warning tones to alert the EVA crewmember of anomalies or other significant events. The EVC includes the following components: orbiter UHF system, EMU radio, EMU electrical harness, communications carrier assembly, biomed sensors, *COMM MODE* selector switch, *COMM* switch, volume controls, and real-time data system. Orbiter panels O6, A1R, and R10 are the crew communication interfaces. The panels control UHF operation, air-to-air or ground transmission, and biomed data downlink/recording respectively.

The display and control module (DCM) contains all controls and displays necessary for nominal operation and monitoring of EMU systems. The DCM includes the following components: *POWER* mode switch, *DISPL* switch, *FAN* switch, *COMM*

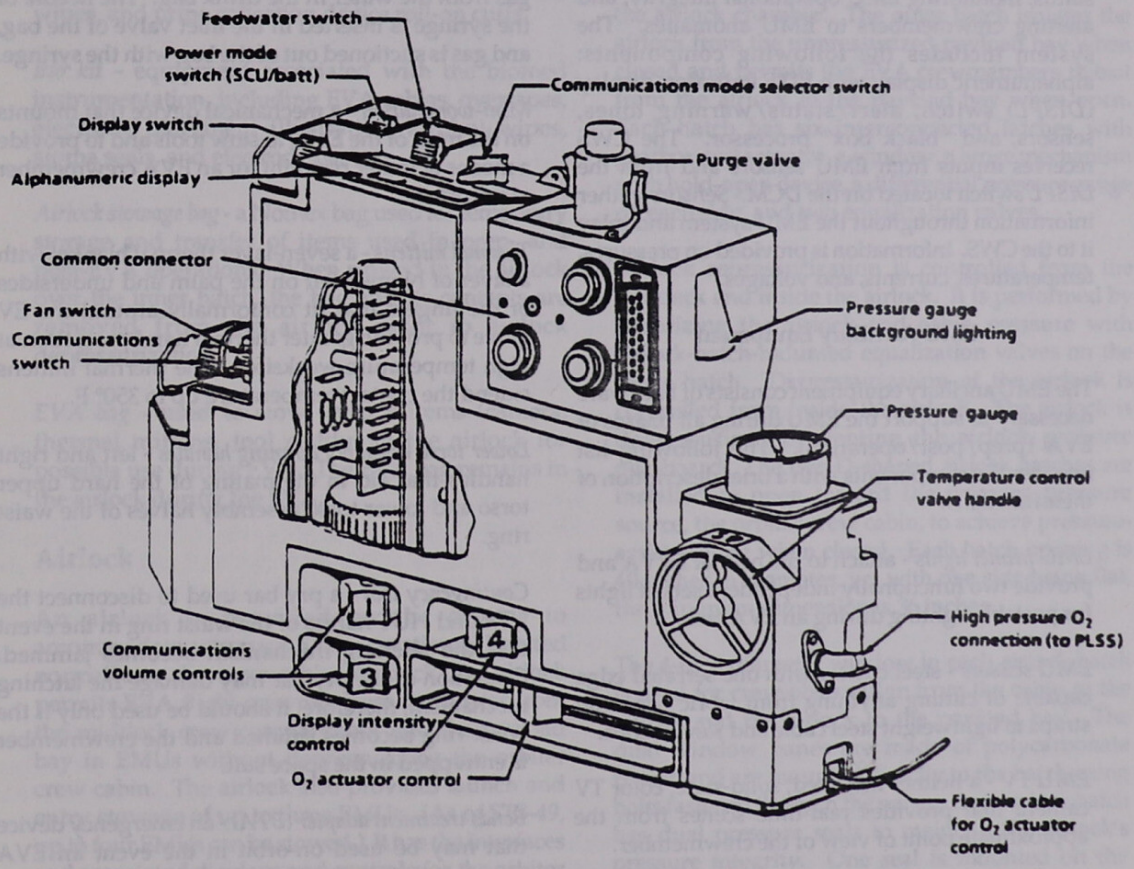

Display and Control Module

switch, communications volume controls, display intensity control, oxygen actuator, temperature control valve, pressure gauge, DCM purge valve, alphanumeric display COMM mode selector, and *WATER* switch. The DCM is installed on the hard upper torso, with the surfaces covered with a TMG. This TMG contains the labels for the controls and displays.

The EMU caution and warning system (CWS) consists of instrumentation and a microprocessor to obtain, process, and visually display information for use by the EVA crewmember in the operation and management of the EMU. The system contains built-in test equipment (BITE), consisting of software and hardware that verify proper CWS operation. CWS serial data are also routed to the ground by the real-time data system. The CWS functions involve displaying EMU leak check procedures, monitoring and displaying EMU consumables status, monitoring EMU operational integrity, and alerting crewmembers to EMU anomalies. The system includes the following components: alphanumeric display with BITE indicator, display (*DISPL*) switch, alert/status/warning tones, sensors, and "black box" processor. The CWS receives inputs from EMU sensors and from the *DISPL* switch located on the DCM. Sensors gather information throughout the EMU system and relay it to the CWS. Information is provided on pressures, temperatures, currents, and voltages.

EMU Ancillary Equipment

The EMU ancillary equipment consists of hardware necessary to support the EMU during all phases of EVA (prep/post/operation). The following list itemizes the components with a brief description of their functions.

EMU helmet lights - attach to the helmet EVVA and provide two functionally independent sets of lights for portable lighting during an EVA task.

EMU scissors - steel cutters with one serrated edge capable of cutting anything from fabric bags and straps to lightweight steel cable and Kevlar cord.

EMU TV - a helmet-mounted, solid-state, color TV camera that provides real-time scenes from the approximate point of view of the crewmember.

EMU wrist mirror - attaches to the wrist of the EVA glove to allow the EVA crewmember to view the controls and displays on the front of the EMU.

EMU watch - an analog, 12-hour-movement, manual-wind chronograph that attaches to an integral watchband on the right EV glove.

EVA cuff checklist - a set of reference cards bound by an aluminum alloy bracket attached to a wrist band. The reference cards, approximately 4 inches by 5 inches in size, contain procedures and reference data for performing EVA tasks and for aiding in the diagnosis and resolution of EMU malfunctions.

Food stick - a fruit bar contained in an edible wrapper, positioned just above the neck ring adjacent to the drink valve on the in-suit drink bag.

In-suit drink bag syringe - a device used to remove gas from the water in the drink bag. The needle of the syringe is inserted in the inlet valve of the bag, and gas is suctioned out of the bag with the syringe.

Mini-workstation - a mechanical device that mounts on the front of the EMU to stow tools and to provide a means of tether restraint for an EVA crewmember at a worksite.

Thermal mittens - a seven-layer thermal blanket with a layer of Nomex felt on the palm and undersides of the fingers that fit conformally around the EV glove to provide greater thermal hand protection at high temperature worksites. The thermal mittens extend the contact temperature up to 350° F.

Lower torso assembly donning handles - left and right handles that aid in the mating of the hard upper torso and lower torso assembly halves of the waist ring.

Contingency tool - a pry bar used to disconnect the LTA and HUT halves of the waist ring in the event that the latching mechanism becomes jammed. Operation of the pry bar may damage the latching mechanism; therefore, it should be used only if the waist ring becomes jammed and the crewmember is entrapped in the space suit.

Bends treatment adapter (BTA) - an emergency device that may be used on-orbit in the event an EVA crewmember contracts decompression sickness

(bends). The BTA converts the EMU into a hyperbaric treatment chamber, pressurizing the EMU to 8.0 psid over ambient cabin pressure.

SOP checkout fixture - a flight support test item installed on the HUT half of the neck ring during pre-EVA operations.

DCM plug - a cover that attaches to the multiple connector on the DCM in the event that water begins leaking from the connector after the service and cooling umbilical multiple connector is removed.

Prep kit - items necessary for preparing the EMU for EVA, such as antifog wipes, tissue-type wipes, scissors, and urine collection device clamps.

Maintenance kit - additional equipment necessary for routine EMU maintenance, including valsalva devices, stericide wipes, lubricant wipes, antifog wipes, and urine collection device roll-on cuffs.

Bio kit - equipment associated with the biomed instrumentation, including EVA cables, overtapes, electrode placement illustration, alcohol wipes, stoma seals, and electrode paste.

Airlock stowage bag - a Nomex bag used for temporary storage and transfer of items used in prep- and post-EVA operations. When stowed in the airlock over the inner hatch, the bag and its contents are removed from the airlock prior to airlock depressurization.

EVA bag - used to stow various items (camera, thermal mittens, tool caddy) in the airlock for possible use during EVA. The EVA bag remains in the airlock during the EVA.

Airlock

An airlock is provided on the orbiter to accommodate astronaut EVA operations. Located normally in the crew cabin middeck, the airlock permits EVA flight crewmembers to transfer from the middeck crew compartment into the payload bay in EMUs without depressurizing the orbiter crew cabin. The airlock also provides launch and entry stowage of up to three EMUs. (As of STS-49, up to four EMUs can be stowed.) It has the interfaces and associated displays and controls for the orbiter systems that support EMU operation and servicing.

Sized to accommodate a two-person EVA, the airlock dimensions include an inside diameter of 63 inches, a length of 83 inches, and two 40-inch-diameter D-shaped openings. The airlock's volume measures 150 cubic feet. Support functions include airlock depressurization and repressurization, EVA equipment recharge, LCVG water cooling, and EVA equipment checkout, donning, and communications. All EVA gear, checkout panel, and recharge stations are located against the internal walls of the airlock.

Airlock Hatches

Two pressure-sealing hatches are mounted on the airlock. The inner hatch is located on the exterior of the airlock (orbiter crew cabin middeck side), opening into the middeck. The inner hatch isolates the airlock from the crew cabin. The outer hatch is mounted in the interior of the airlock, opening into the airlock chamber. The outer hatch isolates the airlock from the unpressurized payload bay when closed and permits the EVA crewmembers to exit from the airlock to the payload bay when open. Each hatch has six interconnected latches with gearbox and actuator, a window, a hinge mechanism with hold-open device, a differential pressure gauge on each side, and two equalization valves.

Airlock repressurization is controlled from the middeck and inside the airlock. It is performed by equalizing the airlock and cabin pressure with airlock-hatch-mounted equalization valves on the inner hatch. Depressurization of the airlock is controlled from inside the airlock. The airlock is depressurized by venting the airlock pressure overboard. The two D-shaped airlock hatches are installed to open toward the primary pressure source, the orbiter crew cabin, to achieve pressure-assist sealing when closed. Each hatch opening is 40 inches in diameter, yet with one side being flat, the minimum dimension is 36 inches.

The 4-inch diameter window in each airlock hatch is used for crew observation from the cabin to the airlock and the airlock to the payload bay. The dual window panes are made of polycarbonate plastic and are mounted directly to the hatch using bolts fastened through the panes. Each airlock hatch has dual pressure seals to maintain the airlock's pressure integrity. One seal is mounted on the airlock hatch and the other on the airlock structure.

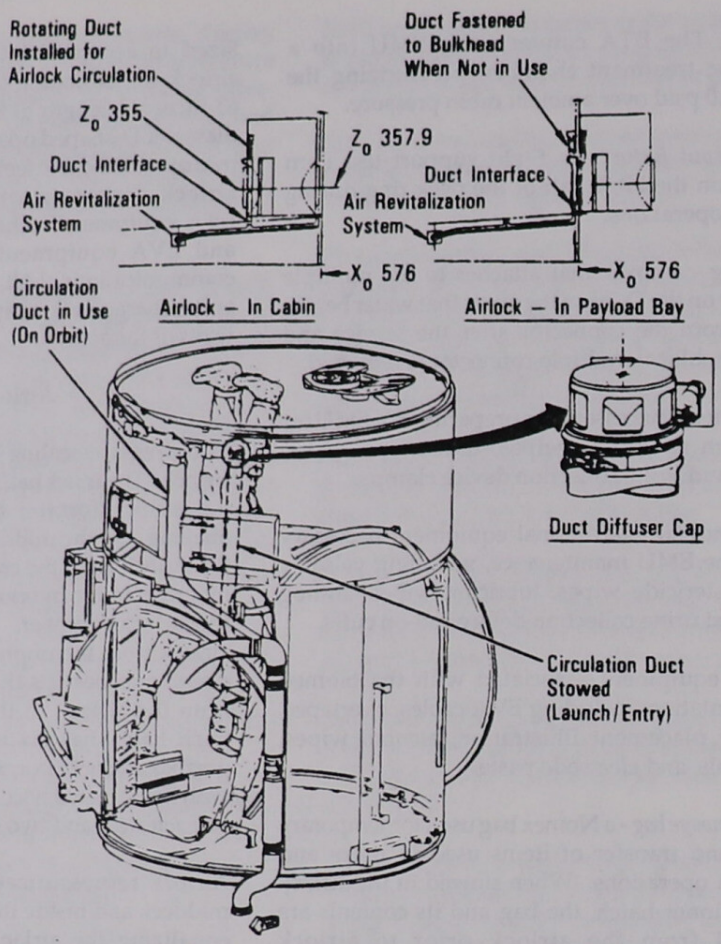

Airlock in Middeck without Spacelab Tunnel Adapter

A leak check quick disconnect is installed between the hatch and the airlock pressure seals to verify hatch pressure integrity before flight.

Each airlock hatch has the following design characteristics: (1) capable of being fully locked/unlocked from either side, (2) designed for 2000 open/close cycles, (3) one-handed operation by astronaut in pressure suit, (4) capable of opening against 0.2 psid maximum, (5) latches capable of withstanding 20 g's in the +X direction, and (6) actuator handle load of 30 pounds maximum.

The gearbox with latch mechanisms on each hatch allows the flight crew to open or close the hatch during transfers and EVA operations. The gearbox and the latches are mounted on the low-pressure side of each hatch, with a gearbox handle installed on both sides to permit operation from either side of the hatch. Three of the six latches on each hatch are double-acting with cam surfaces that force the sealing surfaces apart when the latches are opened, thereby acting as crew-assist devices. To latch or unlatch the hatch, the gearbox handle must be rotated 440 degrees.

The hatch actuator/gearbox is used to provide the mechanical advantage to open and close the latches. The hatch actuator lock lever requires a force of 8 to 10 pounds through an angle of 180 degrees to unlatch the actuator. A minimum rotation of 440

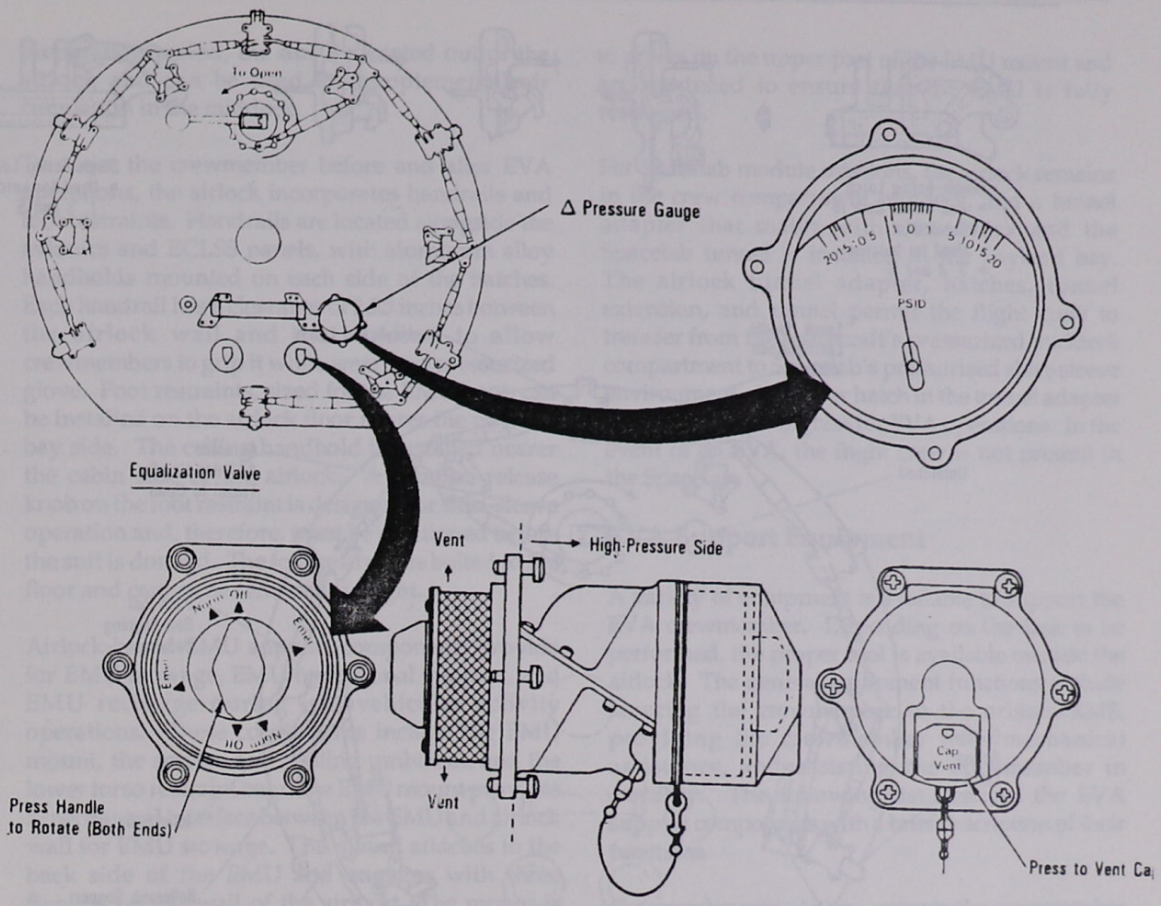

Airlock Repressurization, Schematic Diagram

degrees with a maximum force of 30 pounds applied to the actuator handle is required to operate the latches to their fully unlatched positions.

The hinge mechanism for each hatch permits a minimum opening sweep into the airlock or the crew cabin middeck. The inner hatch (airlock to crew cabin) is pulled or pushed forward to the crew cabin approximately 6 inches. The hatch pivots up and to the right side. Positive locks are provided to hold the hatch in both an intermediate and a full-open position. The outer hatch (airlock to payload bay) opens and closes to the contour of the airlock wall. The hatch is hinged to be pulled first into the airlock and then forward at the bottom and rotated down until it rests with the low-pressure (outer) side facing the airlock ceiling (middeck floor). The hatch has a hold-open hook that snaps into place over a flange when the hatch is fully open. To support and protect the hatch against the airlock ceiling, the hatch incorporates two deployable struts.

Airlock Subsystems

The airlock air circulation system provides conditioned air to the airlock during non-EVA periods. The airlock revitalization system duct is attached to the outside airlock wall at launch. Upon airlock hatch opening in flight, the duct is rotated by the flight crew through the cabin/airlock hatch and installed in the airlock. The duct has a removable air diffuser cap, installed on the end of the flexible duct, which can adjust the air flow from 216 pounds per hour. The duct must be rotated out of the airlock before the cabin/airlock hatch is closed for chamber depressurization. During the EVA

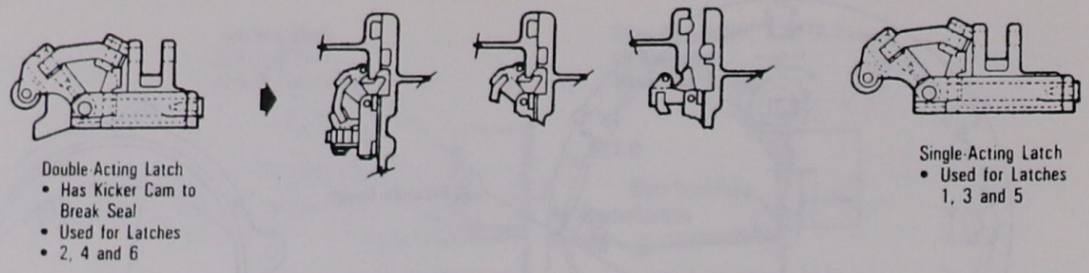

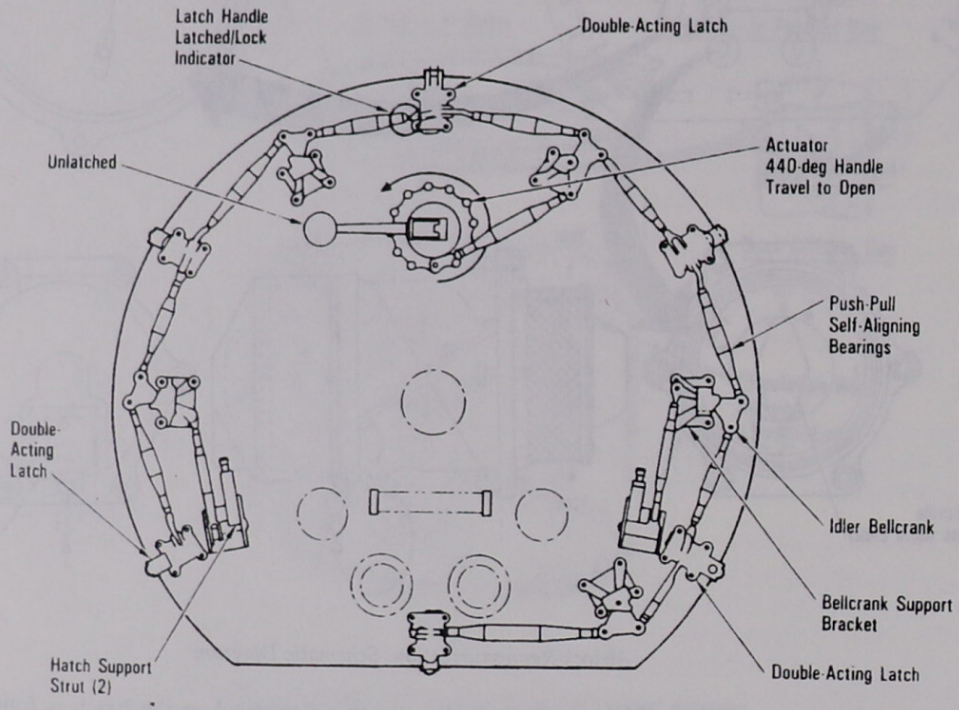

Airlock Hatch Latches, Schematic Diagram

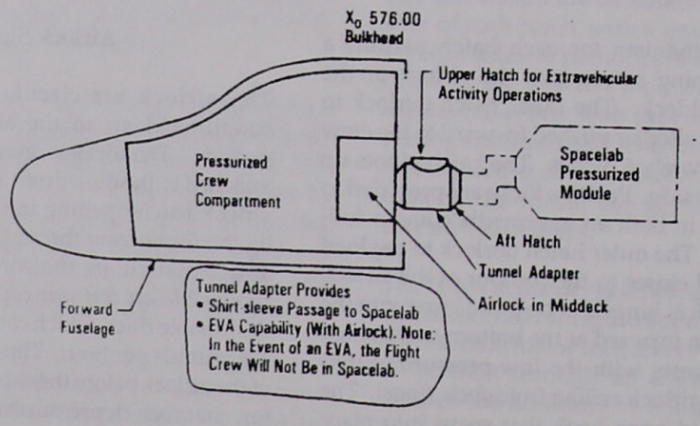

Airlock/Tunnel Adapter

preparation period, the duct is rotated out of the airlock and can be used for supplemental air circulation in the middeck.

To assist the crewmember before and after EVA operations, the airlock incorporates handrails and foot restraints. Handrails are located alongside the avionics and ECLSS panels, with aluminum alloy handholds mounted on each side of the hatches. Each handrail has a clearance of 2.25 inches between the airlock wall and the handrail to allow crewmembers to grip it while wearing a pressurized glove. Foot restraints, sized for the EMU boot, can be installed on the airlock floor nearer the payload bay side. The ceiling handhold is installed nearer the cabin side of the airlock. A rotation release knob on the foot restraint is designed for shirt-sleeve operation and, therefore, must be positioned before the suit is donned. The foot restraint is bolted to the floor and cannot be removed in flight.

Airlock-based EMU support components provide for EMU stowage, EMU operational support, and EMU recharge during intravehicular activity operations. These components include the EMU mount, the service and cooling umbilical, and the lower torso restraint bag. The EMU mount provides a mechanical interface between the EMU and airlock wall for EMU stowage. The mount attaches to the back side of the EMU and engages with three fixtures on the wall of the airlock. The mount is also used to maintain the EMU in a fixed position on orbit for EMU donning and doffing operations. If necessary, the EMU mount can be removed from the airlock wall while on orbit.

The service and cooling umbilical consists of three water hoses, a high pressure oxygen hose, electrical wiring, water pressure regulators, and a strain relief tether. The system is used to interconnect the EMU and the orbiter airlock for two major functions: electrical power, hardline communications, oxygen supply, waste water drainage, and water cooling capability from the orbiter during IVA operation; and recharge capability for the PLSS oxygen tanks, water reservoir, and battery.

The lower torso restraint bag is attached to the bottom of the EMU mount and covers the lower torso of the EMU to restrain it during launch and entry. Straps on either side of the bag are attached to points on the upper part of the EMU mount and are tightened to ensure that the EMU is fully restrained.

For Spacelab module missions, the airlock remains in the crew compartment middeck, and a tunnel adapter that mates with the airlock and the Spacelab tunnel is installed in the payload bay. The airlock tunnel adapter, hatches, tunnel extension, and tunnel permit the flight crew to transfer from the spacecraft's pressurized middeck compartment to Spacelab's pressurized shirt-sleeve environment. An upper hatch in the tunnel adapter provides egress/ingress for EVA operations. In the event of an EVA, the flight crew is not present in the Spacelab.

EVA Support Equipment

A variety of equipment is available to support the EVA crewmember. Depending on the task to be performed, the proper tool is available outside the airlock. The general equipment functions include securing the crewmember to the orbiter/RMS, providing the crewmember with mechanical assistance, and assisting the crewmember in mobility. The following list itemizes the EVA support components with a brief description of their functions.

Crewmember safety tether - ensures the crewmember is positively tethered to the orbiter while providing access to all areas of the payload bay. Before airlock egress, this 55-foot safety tether is attached to a waist tether and remains attached at all times during EVA, while the crewmember translates from one area of the payload bay to another.

Slidewires - facilitate the translation of a crewmember and equipment in the forward and aft directions of the payload bay. Two slidewires are installed for all STS flights on either side of the payload bay for a length of approximately 46 feet.

Tethers - include waist and wrist tethers. Waist tethers are used to attach the crewmember to the orbiter safety tether system and to provide additional crewmember restraint at a worksite when required. Waist tethers use a large hook to be attached to various tether points (including the crewmember safety tether) and a small hook that

attaches to an EMU waist tether ring. Wrist tethers are used to secure tools and hardware to the EVA crewmember and to tether points. Wrist tethers are both fixed and adjustable, attaching to loops on the EMU glove.

Handrails - aluminum tubing strategically located to aid in crewmember translation or restraint to accomplish a specific task. Handrails are located on the forward and aft bulkheads, the hingeline of the payload bay doors, and the RMS end effector. Handrails are designed with tether attach points.

Provisions stowage assembly (PSA) - one or two aluminum tool stowage containers mounted under the cargo bay liner, flush with the bottom of the payload bay. Both the port and the starboard sides of the orbiter fuselage have one container. Tool box tether protocol: when stowing the tools in the PSA, the tools/tool caddies are tethered before they are removed from the mini-workstation and untethered only after they are securely placed in their corresponding storage cavity.

Portable foot restraint - a working platform designed to restrain the EVA crewmember while performing contingency operations on various components of the payload bay systems. The EVA crewmember may use the restraint for work tasks and door latch repairs on or about the forward/aft bulkheads and along the centerline door latches of the payload bay doors. The portable foot restraint stabilizes the crewmember by using a standard foot restraint platform consisting of a system of toe guides and heel clips designed to interface with the EMU boots. A telescoping boom is a contingency device originally designed to provide a mounting base for the restraint and is used to aid in a specific task requiring restraint near the forward or aft bulkheads.

Winch EVA - allows the EVA crewmember to close the payload bay doors in the event of a payload bay door drive system failure. Prior to launch, the winch is mounted on both the forward and aft payload bay bulkheads. The winch consists of a reel, assisted by spring energy, housing 24 feet of 3/8-inch-diameter Kevlar rope with a hook attached to the free end.

Tube cutter - used for a contingency door-closing operation. The tool consists of spring-loaded retention rollers, a cutter wheel mounted on a slide, a blade ratchet handle, a rotating body, a control lever, and a tube-cutter ratchet handle. It cuts tubes with a diameter ranging from 1/2 inch to 1 inch.

Payload bay doors disconnect tools - used to disengage the payload bay doors power drive unit(s) (two) from the power-drive-unit torque shaft, allowing manual closing of the doors. The tool is approximately 6-3/4 inches long from the tip of the tether ring to the end of the 3/8-inch steel square drive extension. Additional tools for disconnecting the door drive system include vise-grip, ratcheting box-end wrench, adjustable wrench, loop pin extractor, velcro caddy, bolt puller, and tape caddy.

Three-point latch tool - used to compensate for failed bulkhead latches. The tool consists of a stowable ratchet handle, two interchangeable tool handles, a ratchet control selection lever, a spring-loaded compensator, and two fixed-load pickup points.

Centerline latch tool - used to compensate for a failed payload bay door centerline latch. The tool consists of a fixed-load and a spring-loaded pickup point, plus a reversible ratchet with a stowable handle and a pair of trigger release buttons with a safety that prevents an accidental release.

Airlock latch disconnect tool - a common, EVA-modified, crescent wrench used to force open a jammed latch and/or latches disconnected from the rotary actuator. The other contingency airlock disconnect tool is a drive ratchet with a hex socket.

RMS rope reel - used in conjunction with the snatch block in the event of an RMS joint failure. The reel consists of a rope spool, spool bracket, rope guide, and cam cleats. The rope reel contains approximately 80 feet of 5/16-inch-diameter Kexlon rope.

Snatch block - a common marine device used, in the event of an RMS failure, in conjunction with the RMS rope reel and EVA winch to backdrive the RMS to a stowed position. If a failure should occur in the airborne support equipment drive system, the snatch block is also used to help stow and deploy the IUS and its satellite.

Payload retention device (PRD) - used as a temporary tiedown tool so that the article or payload being secured can be repositioned as necessary to prevent damage. It consists of a housing that encloses a 15-foot Kevlar webbing strap on a spring-loaded reel.

RMS manipulator positioning mechanism wrench (RMS MPM wrench) - a double-ended, open-end steel wrench used to deploy or stow the MPMs (in the event the MPM motors fail) by manually turning the drive shaft in the appropriate direction, thus allowing for payload deployment and/or payload bay door closing.

RMS shoulder brace release - a flat steel bar with an angled foot used to disengage the RMS shoulder brace locking mechanism, thus releasing the shoulder brace. If the lock is not released, the RMS is inoperative.

Flight releaseable grapple fixture shaft changeout tools - used to remove/install a flight releaseable grapple fixture shaft should an end effector malfunction, failing to release a payload. The three tools include forceps, probe, and 1/2-inch ratcheting box-end wrench.

EVA lights - used to illuminate the payload bay for crew visibility during payload bay door operations, EVA activities, RMS operations, payload deployment, and station keeping/docking. Seven floodlights are installed strategically in the payload bay, while one floodlight is positioned on the RMS end effector.

Payload/cradle jettison tools - used to jettison a payload that has failed to deploy and cannot be stowed or secured for safe reentry. The tools include the reaction fitting, ground support equipment latch retention pin and set screw, and the torque multiplier.

Manned Maneuvering Unit

The manned maneuvering unit (MMU) is a self-contained, propulsive backpack mobility system designed to supplement astronaut EVA. The MMU expands EVA capabilities by allowing the astronaut to maneuver outside the confines of the orbiter payload bay. This independent mobility gives the astronaut the freedom to fly to any part of the orbiter or to nearby free-flying spacecraft. The unit can be used to carry cargo of moderate size, to stabilize satellites, to retrieve small free-flying payloads, and to provide remote photography of orbiter operations. Evolved from the experimental M509 used on Skylab, the MMU design features a battery-powered electrical system, gaseous nitrogen (GN_2) propulsion, a gyro-stabilized attitude control system, and basic controls and displays. The unit is designed as a fully redundant, fail-safe system. Dual electrical, control, and propulsion subsystems ensure that no single credible failure could prevent the EVA crewmember from returning to the orbiter payload bay.

Three MMU missions were flown during 1984. The first operational flight of the MMU was on STS 41-B in February 1984. This flight was mainly a demonstration of the operational capabilities of the unit. The second MMU mission flown, STS 41-C in April 1984, involved the on-orbit retrieval and repair of the Solar Maximum Mission satellite. In November 1984, STS 51-A included the third MMU mission. This mission involved using the MMU to retrieve two malfunctioning communication satellites (Palapa B-2 and Westar VI) launched earlier on the Space Shuttle.

The MMU has complete 6-degree-of-freedom control capability with spacecraft-type piloting logic, thus enabling it to perform a full range of translation or rotation maneuvers, either singly or in combination. Commands to operate the thrusters are input via two hand controllers. The left-hand controller handles 3-degree-of-freedom translation inputs, while the right-hand controller handles 3-degree-of-freedom rotation inputs. A control electronics assembly converts the hand controller inputs into commands to operate the appropriate thrusters for achieving the desired maneuver. The MMU also has the capability to perform automatic attitude hold on command. This function is available to maintain the MMU in an inertial attitude during flight by using thrusters to automatically counteract induced rotations as sensed by rate gyros.

The MMU utilizes 24 fixed-position GN_2 thrusters to provide translational and rotational maneuvering capability. GN_2 is stored in two propellant tanks. Electrical power is provided by two batteries capable of individually supplying 26.6 amp-hours of power, sufficient to support a 7-hour EVA without battery recharging or replacement. Recharge of the GN_2

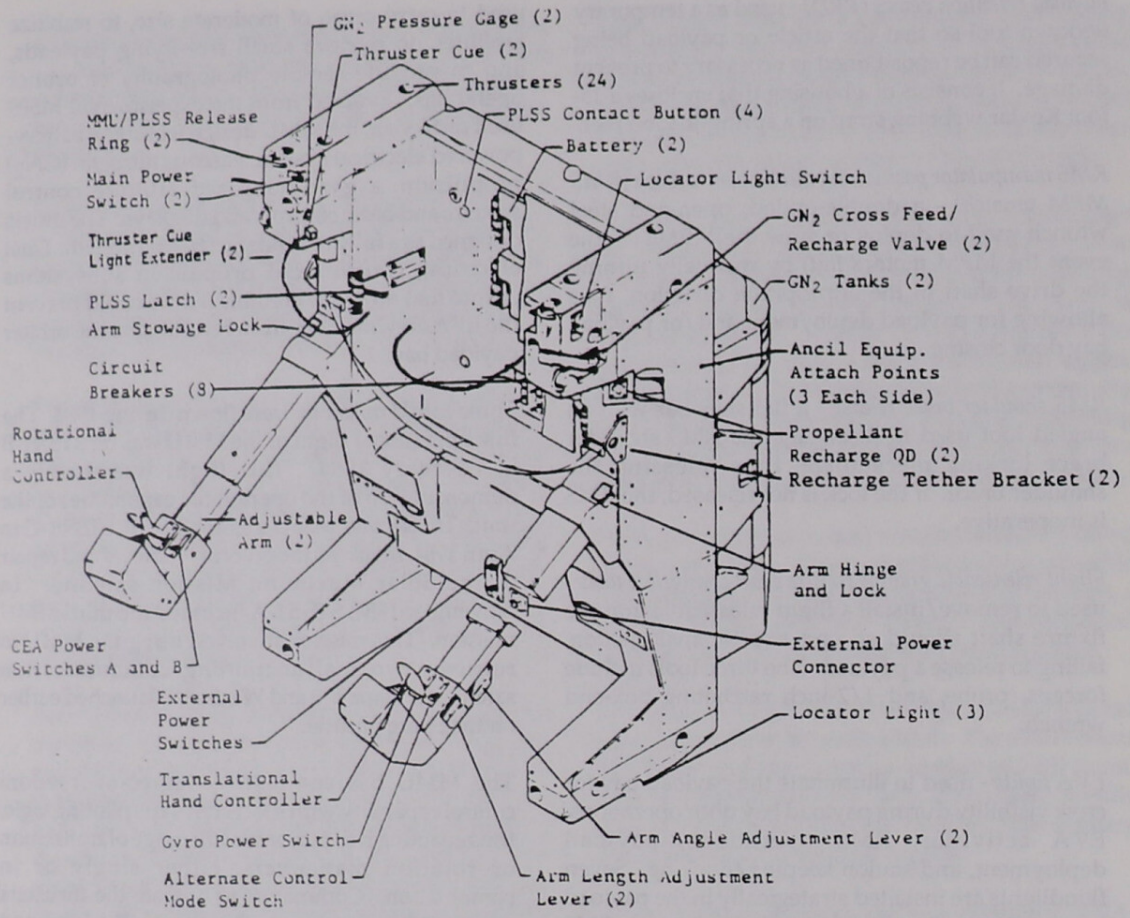

MMU Components

propellant tanks may be necessary, depending on the particular tasks being performed. The rates at which MMU propellant and electrical power are consumed are highly dependent upon mission-unique factors, such as total system mass and the manner in which the crewmember accomplishes the required maneuvers.

The MMU structure consists of an aluminum framework and skin with the two GN_2 propellant tanks mounted at the rear of the frame. The control electronics assembly (CEA) is located between these two tanks. Batteries and circuit breakers are accessible from the front and are covered by thermal protective flaps. Neither the batteries nor the circuit breakers can be accessed with the MMU donned. The sides of the MMU consist of two towers in which the thruster jets are located. The towers also house power switches, propulsion system displays, control actuators for fuel crossfeed valves, and latches for EMU retention. The MMU also provides attachment points for the use of ancillary equipment, such as satellite docking mechanisms, tools, portable lights, and cameras.

The two control arms are also mounted on the towers. These arms contain the control system electronic switches and the two hand controllers. When stowed, the arms are positioned fully retracted, locked, and folded against the MMU towers. For operational use, the arms may be released and rotated to either "flight" or "worksite" positions. The "flight" position places the hand controllers at the pilot's fingertips. In this position,

the length of the arms can be adjusted to accommodate 5th-percentile to 95th-percentile pilots. The "worksite" position is intermediate between the "flight" and "launch" positions and allows maximum access to work areas.

The flight support station (FSS) provides payload bay stowage for the MMU and serves as a propellant recharge station as well as a location for MMU donning/doffing and battery replacement. At this station, the MMU can be readily donned, doffed, and serviced by one crewmember. The FSS also provides the interface with the orbiter GN_2 system for propellant refueling, electrical power for heating FSS/MMU components during orbital storage, and temperature instrumentation for the orbiter caution and warning system. When MMU operations are required on a mission, two MMUs and FSSs are usually flown. The FSSs are mounted on the port and starboard sides of the forward end of the orbiter payload bay.

Operations

As previously discussed, there are three types of EVA: scheduled, unscheduled, and contingency. A scheduled EVA is defined as any EVA incorporated into the normal flight plan in order to complete a specific mission objective. An unscheduled EVA is not part of the flight plan; rather, it is conducted to achieve payload operation success or to advance overall mission accomplishments. A contingency EVA is also unscheduled, but is required to ensure safe return of the orbiter and flight crew.

Regardless of the EVA type, a series of procedures are required to initiate and terminate an EVA. These procedures cover an integrated timeline sequence from the EVA checklist. The detailed procedures are summarized for reference in the following steps:

1. ***Helmet retention assembly donning*** - Donning of the HRA for prebreathe and cabin depressurization.
2. ***Cabin depressurization to 10.2 psi*** - Reducing the cabin pressure from 14.7 psi to 10.2 psi.
3. ***EMU checkout*** - Preliminary checkout of the EMU systems prior to EMU donning.
4. ***Middeck preparation and preparation for donning*** - Configuration of the EMU and its ancillary components for crewmember donning.
5. ***Suit donning*** - Crewmember donning of the EMU and ancillary components, approximately 40 minutes duration.
6. ***EMU check*** - Configuration and checkout of the EMU prior to EMU purge.
7. ***EMU purge*** - Nitrogen purge of the EMU prior to prebreathe.
8. ***Prebreathe*** - Crewmember acclimation to lower chamber pressure, over a period of 40 to 70 minutes.
9. ***Preparation for depressurization*** - Configuration of the airlock and closing the inner hatch prior to airlock depressurization.
10. ***Airlock depressurization*** - Configuration and checkout of the EMU, airlock depressurization to vacuum, and opening of the outer hatch.
11. ***Airlock repressurization*** - Airlock repressurization and opening of the inner hatch.
12. ***Post-EVA*** - Shutdown of the EMU systems and doffing of the EMU and ancillary components.
13. ***EMU maintenance/recharge*** - Changeout or recharge of the EMU battery and lithium hydroxide cartridge and general cleaning of the EMU for subsequent EVA; recharge of the EMU water system.
14. ***Post-EVA entry preparation*** - Reconfiguration and restowage of the EMU and airlock equipment.

A set of procedures are followed when a crewmember has contracted the bends during an EVA. The crewmember discontinues the EVA and returns to the airlock to connect to the service and cooling umbilical. The airlock is repressed to 10.2 psia, and the cabin is repressed to 14.7 psia. The helmet is doffed, and the crewmember drinks a minimum of 32 ounces of fluids. After proper EMU reconfiguration, the bends treatment adapter is installed for bends recovery.

Contingency EVAs occur if orbiter hardware sustains a malfunction. Procedures, tools, and specified work locations are identified for practice on any STS mission. The recognized failures pertain to the following orbiter systems: radiator actuator, payload bay doors, bulkhead latches, centerline latches, airlock hatch, remote manipulator system (RMS), bulkhead camera, Ku-band antenna, payload retention latch assembly, and passive latches. The corrective actions for each system failure are itemized below.

FAILURE	CORRECTIVE ACTION
Radiator actuator	Radiator actuator disconnect
Payload bay door system	PDU disconnect Winch operations PLBD drive system linkage cut PLBD drive system disconnect Electrical crossover disconnect Jam removal
Bulkhead latch	3-point latch tool installation Latch disconnect Jam removal
Centerline latch	Centerline latch tool installation Jam removal
Airlock latch	Airlock latch disconnect Hinge disconnect
RMS	RMS joint alignment RMS tiedown MPM stow/deploy RMS shoulder brace release
Bulkhead camera	Disconnect and remove camera
RMS end effector fails to release payload	Grapple shaft removal
Ku-band antenna fails to align for stowing	Ku-band antenna gimbal alignment
Passive latches fail to secure payload	Torque multiplier operations
Payload retention latch assembly fails to open	Manually open payload retention latch assembly

Scheduling an EVA is a very complex and involved task. The following list outlines the general mission constraints regarding EVA, but does not attempt to define the detailed specific activities.

- The maximum scheduled duration for an EVA is 6 hours.
- All scheduled and unscheduled EVAs require two crewmembers.
- No scheduled or unscheduled EVA shall occur on flight day 1 (~24 hours MET).
- No scheduled EVA shall be planned to occur prior to flight day 4 (~72 hours MET) unless:
  - i) A specific flight is dedicated to scheduled EVA activity, and
  - ii) That payload customer has specifically negotiated with NASA for the early scheduled EVA capability, and an exemption is processed.
- The latest an EVA may be scheduled in preflight planning is EOM-2.
- No unscheduled EVA shall be planned to occur prior to flight day 3 (~48 hours MET) unless:
  - i) A specific payload has no alternative but to utilize an EVA as its third level of redundancy for the purpose of a critical backup to deploy/operations that would prevent loss of the payload, and
  - ii) That payload customer has been made aware of the inherent risk that the EVA may not be able to be performed due to crew status, and the customer has agreed to accept the risk, and
  - iii) That payload customer has specifically negotiated with NASA for the early unscheduled EVA capability, and an exemption is processed.
- The following are required response times prior to an unscheduled payload EVA:
  - i) Upon the discovery of a failure leading to an EVA, approximately 24 hours are allotted for EVA preparation prior to starting actual EVA maintenance on a failed component.
  - ii) If the case above occurs on launch day, then approximately 44 hours are allotted prior to starting EVA maintenance.
  - iii) If a payload requires a shorter EVA response time, then the requirement for that EVA must be negotiated with NASA, and an exemption must be processed.
- Payload activities that could require an unscheduled EVA at the end of a mission may only be scheduled if there are sufficient consumables and landing opportunities to extend the mission to perform the EVA and preserve 2 wave-off days.
- A minimum of 1 flight day must separate two scheduled EVAs, for any given EVA crewmember.
- A contingency EVA will be scheduled in real time whenever it is necessary to restore the orbiter to a configuration for safe return.

EVA Summary Data

- EVA refers to operations performed outside the spacecraft crew compartment.
- For orbiter missions, two suits are included with consumables provided for three, two-person, six-hour EVAs.
- There are three basic categories of EVA: scheduled, unscheduled, and contingency.
- The extravehicular mobility unit (EMU) is an independent anthropomorphic system that provides environmental protection, mobility, life support, and communications for the crewmember to perform EVA in Earth orbit. An EVA is defined, for EMU design considerations, as any time the EMU external environmental pressure is below 4.0.
- The EMU is an integrated assembly, primarily composed of the space suit assembly, life support system, and numerous items of associated support and ancillary equipment.
- The orbiter's airlock permits EVA flight crew members to transfer from the middeck crew compartment into the payload bay in EMUs without depressurizing the orbiter crew cabin. The airlock also provides launch and entry stowage of up to three EMUs.
- The airlock's support functions include airlock depressurization and repressurization, EVA equipment recharge, LCVG water cooling, EVA equipment checkout, donning, and communications.
- Depending on the task to be performed, the proper tool is available outside the airlock. The general EVA-support equipment functions include securing the crewmember to the orbiter/RMS, providing the crewmember with mechanical assistance, and assisting the crewmember in mobility.
- The manned maneuvering unit (MMU) is a self-contained, propulsive backpack mobility system designed to supplement astronaut EVA.
- The MMU has complete 6-degree-of-freedom control capability with spacecraft-type piloting logic, thus enabling it to perform a full range of translation or rotation maneuvers, either singly or in combination. Commands to operate the thrusters are input via two hand controllers.
- A standard series of procedures (pre and post operations) are required to initiate and terminate an EVA, regardless of the EVA type.

EVA Rules of Thumb

- Always use "make before break" tether protocol.
- Don't use the glove as a hammer.
- EVA crewmember must remain tethered at all times.
- Slow and deliberate motion provides much greater stability than quick, jerky motions.
- Body positioning is 90 percent of the task.
- Each EVA crewmember should check out his or her own EMU.

2.12 GALLEY/FOOD

CONTENTS

Description 2.12-1
Water Dispenser 2.12-1
Food Warmer 2.12-2
Food 2.12-2
Galley/Repackaged Galley 2.12-3

Description

The middeck of the orbiter is equipped with facilities for food stowage, preparation, and dining. The food supply is categorized as either menu food, pantry food, or fresh food. Menu food consists of three daily meals per crewmember and provides an average energy intake of approximately 2,700 calories per crewmember per day. The pantry food is a 2-day contingency food supply that also contains food for snacks and beverages between meals and for individual menu changes. Pantry food provides an average energy intake of 2,100 calories per crewmember per day. Fresh food items consist of perishable items such as fruits and tortillas. The types of food include fresh, thermostabilized, rehydratable, irradiated, intermediate-moisture, and natural-form food and beverages.

Three 1-hour meal periods are scheduled for each day of the mission. This hour includes actual eating time and the time required to clean up. Breakfast, lunch, and dinner are scheduled as close to the usual hours as possible. Dinner is scheduled at least 2 to 3 hours before crewmembers begin preparations for their sleep period.

If a payload or the middeck accommodation rack is installed in the middeck, the repackaged galley will be manifested. The primary components (galley oven, rehydration station, hot water tank) are taken from the existing galley inventory, and have been repackaged to occupy less space. These operate in the same manner as on the larger galley. The repackaged galley is first scheduled to be manifested on STS-49, and will eventually be manifested on all flights, thus permanently replacing the larger galley. The menu trays, housed in the upper compartment of the larger galley, will be relocated to middeck lockers.

If a galley is not manifested, the food preparation system components are a water dispenser, a food warmer, food trays, and food system accessories. The probability of this system being manifested again in the future is slim.

Water Dispenser

The water dispenser provides the flight crew with ambient and chilled water for drinking and reconstituting food. The dispenser consists of a housing assembly, rehydration station, hygiene water quick disconnect, and water lines.

Three positions for water flow are *OFF*, *CHD*, and *AMB*. The *OFF* position prevents water from flowing to the rehydration station (it does not shut off water flow to a personal hygiene water outlet quick disconnect). The *CHD* water position provides chilled water to the rehydration station. The *AMB* water position provides ambient water between 65° and 75° F to the rehydration stations. Depressing the hygiene water valve handle allows a constant flow of ambient water. Releasing the handle

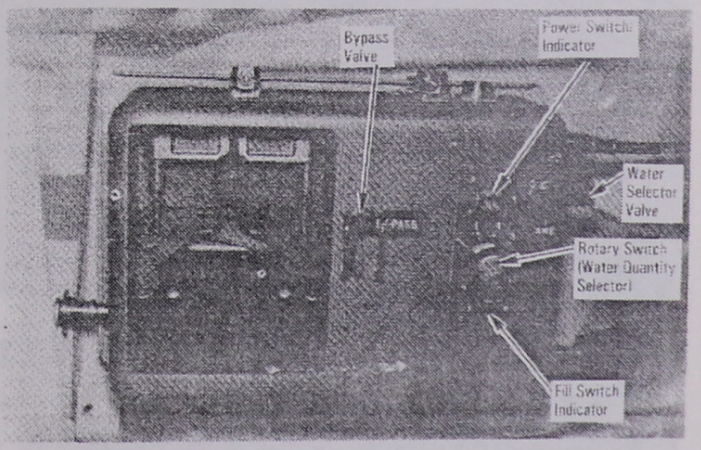

Water Dispenser

prevents water flow. The locked-open position allows a constant flow of ambient water without holding the handle.

The water dispenser includes a rehydration station, which is an electronic dispensing system that interfaces directly with food and beverage packages to provide rehydration capability and drinking water for flight crewmembers. The system dispenses 2, 3, 4, and 8 ounces of water through a replaceable needle when the *PWR* push button is depressed. The system is deactivated by depressing the push button a second time. This push button illuminates during water dispense and goes out when the package has been filled with the selected quantity of water. A spare needle is stowed at the rear of the rehydration unit, and another is stowed in the in-flight maintenance middeck locker. The needles are removed and installed with a 3/8-inch open-end wrench.

Food Warmer

The food warmer is a portable heating unit that can warm a meal for at least four crewmembers within 1 hour. It is stowed in a middeck locker at launch and is removed and installed during meal preparation activity. (If stowage allows, two food warmers will be flown to expedite food preparation.) The food is heated by thermal conduction on a hot plate (element).

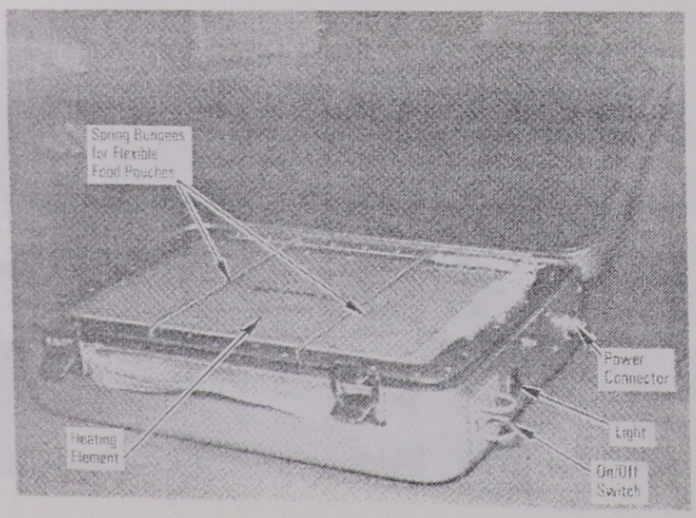

Food Warmer Components

The exterior contains controls and displays, a power connector that interfaces with the power cable, and a Velcro attachment. A hinged element is sandwiched between two aluminum plates and contained by a fiberglass frame. The aluminum plates have spring-bungee restraints for foil-backed food packages on one side. An *ON/OFF* switch provides two-phase ac power to the unit, and a light indicates the warmer is operating. The power cable attaches to a middeck ac utility outlet and is stowed inside the case at launch.

Food

Food trays are kept in the galley or a middeck stowage locker (if a payload or middeck accommodation rack is manifested) at launch and are removed and installed in the use locations during preparations for the first meal. The tray is an anodized aluminum sheet that restrains food and accessories during dining. The trays are color-coded for each crewmember. Velcro on the bottom of the food trays allows them to be attached to the front of the middeck lockers (or the galley door, if installed) for food preparation or dining. The straps will also hold the trays on the crewmember's leg for dining. A cutout on the tray allows three rehydratable food packages to be secured to the tray. Another cutout with rubber strips adapts to various-sized food packages, including cans, pouches, and rehydratable food packages. Two magnetic strips hold eating utensils, and two 0.75-inch-wide binder clips on the tray retain such things as condiment packets and wipes. Accessories used during food preparation and dining include condiments, gum and candy, vitamins, wet wipes, dry wipes, galley adaptor, drinking straws, utensils, and a re-entry kit that contains salt tablets, long straws, and empty drink containers.

Condiments include salt, pepper, taco sauce, hot pepper sauce, catsup, mayonnaise, and mustard. The salt and pepper are liquids stored in small plastic squeeze bottles. The remaining condiments are packaged in individual, sealed, flexible plastic pouches. Vitamin tablets supplement dietary requirements.

Wet wipes are packaged in 21 individual packets per dispenser for cleaning utensils after dining. A light spring action retains and positions wipes for dispensing. Approximately five to 10 different color-coded straws are provided for each crewmember (depending on the flight's duration) for drinking beverages and water. Additional straws are kept in the pantry beverages and various menu locker trays. Color-coded utensils include a knife, two spoons (large and small), a fork, a pair of scissors, and a can opener for each crewmember. They are stowed with a soft plastic holder that has a Velcro snap cover. Dry wipes are packaged in a 30-wipe container that can be attached to the crew cabin wall with Velcro for cleanup after dining.

The re-entry kit consists of one package containing drink containers and salt tablets for entry fluid loading. Two salt tablets are to be taken with 8 ounces of water or other beverage by each crewmember four times before entry. The re-entry kit will be stowed with the pantry beverages.

Galley/Repackaged Galley

The galley is a multipurpose facility that provides a centralized location for one individual to handle all food preparation activities for a meal. The galley has facilities for heating food, rehydrating food, and stowing food system accessories and food trays. The galley consists of a rehydration station, oven, food trays, and food system accessories. The repackaged galley provides the same basic capabilities, but the food trays and accessories are relocated to middeck lockers.

Oven

The oven is divided into two principal compartments: a lower compartment designed for heating at least 14 rehydratable food containers inserted on tracks, and an upper compartment designed to accept up to seven flexible packages. The repackaged galley oven lower compartment is for flexible packages, and the upper compartment is for rigid containers (i.e., just the reverse of the galley). An oven fan *ON/OFF* switch enables/disables power to three oven fans. These fans circulate warm air over a heat sink, thus providing convection heating for the rigid packages. The flexible packages are held against the heat sink by four spring-loaded plates, and warmed by conduction. The oven has a heating range of 145° to 185° F. During launch and entry, the oven door is held closed by a restraining strap, which is removed from the door by releasing the snap for on-orbit operations.

Rehydration Station Dispensing System

The galley/repackaged galley rehydration station dispensing system interfaces directly with food and beverage packages to provide rehydration capability and drinking water for crewmembers.

A gauge indicates hot water temperatures of 100° to 220° F. The *VOLUME/OUNCES* switch selects the volume of water to be dispensed by the rehydration station in 0.5-ounce increments from 0.5 of an ounce to 8 ounces. The yellow *HOT* push button indicator allows hot water to be dispensed

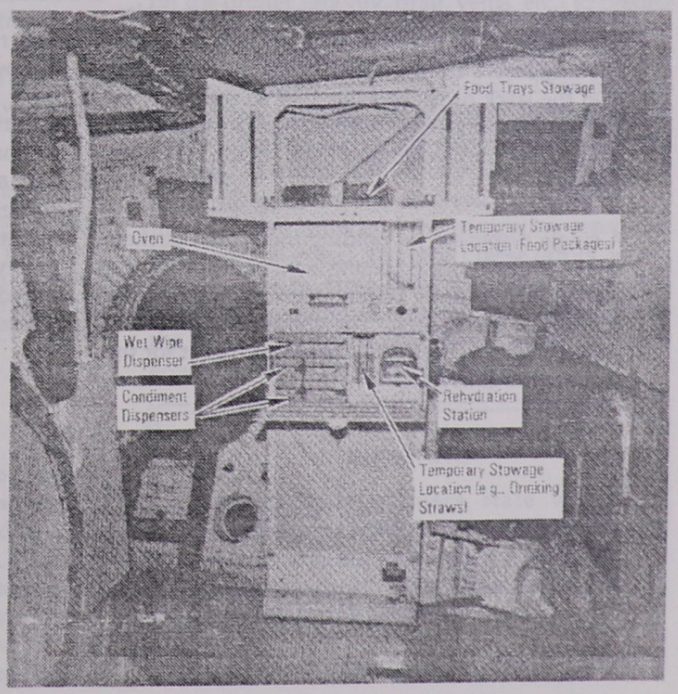

Galley System Components

when it is depressed and is illuminated when energized. When the selected volume of water has been dispensed, the push button will begin to flash on and off. The light will be extinguished when the food package is retracted, releasing the rehydration station lever *ARM/LIMIT* switch.

The rehydration station lever *ARM/LIMIT* switch serves as an interlock so water can be dispensed only when a food package is connected to the needle. The food package makes contact with the rehydration station lever, which activates the *LIMIT* switch (note that the flight crew does not physically actuate the lever). The blue *COLD* push button indicator allows cold water to be dispensed when it is depressed and is illuminated when energized. When the selected volume of water has been dispensed, the push button will begin to flash on and off. The light will be extinguished when the food package is retracted, releasing the rehydration station lever *ARM/LIMIT* switch.

Food System Accessories

Two condiment dispensers are attached to the galley by Velcro tabs on the back of the dispensers. The dispensers are available for holding individual packets, such as catsup, taco sauce, mayonnaise, and mustard, on the front panel below the oven. The dispensers are open-ended boxes designed to hold the stack of packets together so they may be individually removed as needed. A slide plate keeps the packets from becoming loose as the items are depleted.

A single dispenser for holding individual packets of wet wipes is located on the front panel below the oven and is slightly different in design than the condiment dispensers. The condiments and wet wipes will be relocated to a middeck locker for the repackaged galley.

Galley Controls

The lower portion of the galley has controls located behind a cloth panel. In the upper left-hand corner is the MV3 valve that has an *ON* position, which serves as the nominal open position of the manual shutoff valve, and *EMER OFF*, which serves as a manual shutoff valve for the ambient temperature water supply to the galley. On the upper right-hand corner are test connectors, a dc power bus A and B switch, and a flush port quick-disconnect test port. The two test connectors serve as a hookup for ground support equipment. The dc power bus A switch's *ON* position activates the galley oven heaters, and rehydration station system; the *OFF* position deactivates them. The dc power bus B switch's *ON* position activates galley water tank strip heaters, and the *OFF* position deactivates them. The flush port quick disconnect serves as the galley water system GSE flush port.

On the lower left-hand side of the galley (closest to the side hatch) is an auxiliary port water quick disconnect that allows the crewmembers to obtain ambient potable water when a 12-foot flex line and water dispensing valve are attached to the quick disconnect.

The repackaged galley controls are located as follows: the MV3 valve is located on the lower right corner and is now called MV2. It allows selection of either hot water flow (to rehydration station) or ambient water flow to the auxiliary port. The auxiliary port is located in the lower right corner, directly above the MV2 valve. The test connectors are located beneath the repackaged galley. The power bus switches for the oven, rehydration station, and water tank strip heaters is located on the front face of the repackaged galley.

2.13 GUIDANCE, NAVIGATION, AND CONTROL (GNC)

CONTENTS

Description 2.13-1
Navigation Hardware 2.13-5
Flight Control System Hardware 2.13-24
Digital Autopilot 2.13-44
Operations 2.13-50

Description

Navigation is the determination of the current state of motion of the vehicle; that is, position, velocity, and attitude. This state is determined with reference to some mission-dependent coordinates suitable for defining the motion of the vehicle.

Guidance is the computation of corrective actions to change from the navigation-determined vehicle state to a required vehicle state. The required state depends on particular mission requirements. Mission requirements usually specify a required present state (e.g., a particular orbit) or an objective (e.g., rendezvous at a point in space from which the present required state can be computed).

Control is the application of corrective maneuvers to obtain the changes commanded by guidance. Flight control for the orbiter converts guidance computations into effecter commands to point and translate the vehicle. Control software frequently uses navigation data to determine the effectors used and the appropriate system control gains.

State Vector

The basic function of the orbiter navigation system is to maintain an accurate estimate of the inertial position and velocity of the vehicle, called its state vector, with respect to time. In addition, during a rendezvous mission, the navigation system must also maintain an estimate of a target's position and velocity. This information is then used by the onboard guidance system to compute the commands required to transfer the vehicle from one position and velocity to another, as well as to point the vehicle at a specified target (Earth, Sun, another orbiting vehicle, etc.). The state vector data are also used by the ground controllers for monitoring the health of the on-board navigation system. Information about the orbiter and target state vectors is displayed to the crew on the dedicated displays and GNC CRT displays.

The navigation system maintains its knowledge of the orbiter's position and velocity with a group of six parameters (X, Y, Z, Vx, Vy, Vz) defining the state vector. A time tag is also associated with this state vector. The X, Y, Z components are the orbiter's position in the M50 coordinate system measured in feet from the center of the Earth. The velocity components are measured in feet per second, and are also in the M50 coordinate system. The time at which the state vector is applicable is based on Greenwich Mean Time.

The navigation system uses the standard equations of motion along with the information received from the inertial measurement units, the navigation sensors, and the software models of the forces acting on the orbiter (gravity, drag, vents, etc.) to predict the components of the state vector at each time value. This process is called state vector propagation, a scheme in which errors are inherent. The equations of motion and the propagation technique are approximations, as are the gravity, drag, and vent models. In addition, the acceleration, position, and range rate information received from the inertial measurement units and the navigation sensors is also prone to error. To correct these errors, which increase with time, the ground controllers periodically uplink a new state vector or a delta to the current on-board state based upon the more accurate ground radar tracking data.

WARNING

Control software uses state vector information to select control effectors and set control gains, especially during entry. Large navigation errors can cause the orbiter to depart controlled flight.

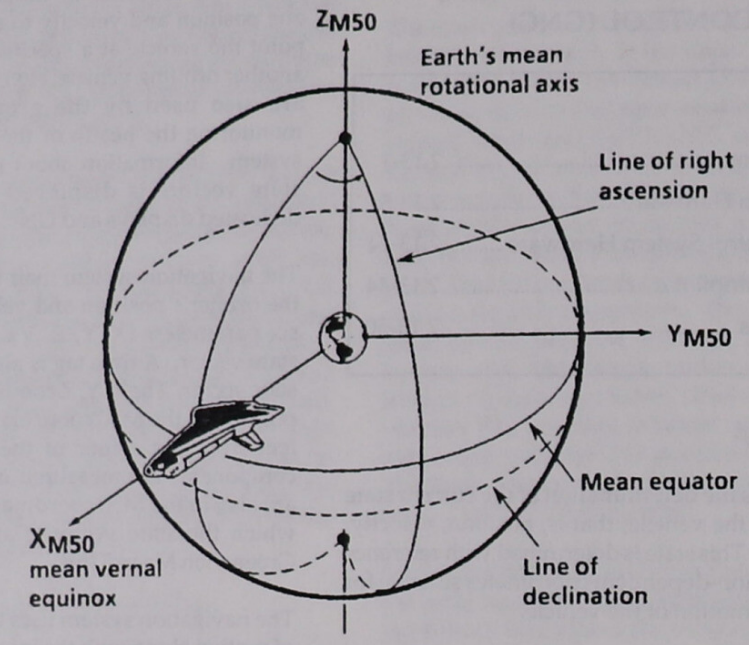

M50 Coordinate System

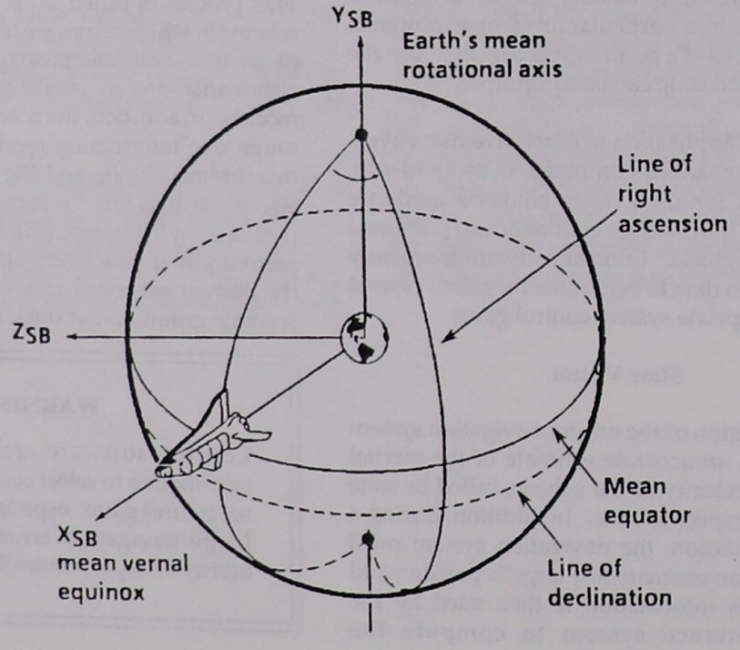

Starball Coordinate System

Coordinate Systems

The position and velocity of the orbiter must be uniquely defined in terms of an inertial coordinate system – a reference frame that is neither rotating nor accelerating. Such a system ensures that the normal equations of motion are valid. The on-board navigation system uses the Mean of 1950 (M50) inertial system. However, some computations are considerably simpler if performed in other coordinate systems. For example, when landing the orbiter, the position of the vehicle relative to the runway is more meaningful than its position in a coordinate system fixed in space. Therefore, the on-board navigation system uses a number of different coordinate systems to simplify the various inputs, outputs, and computations required. These inputs and outputs can be expressed in any coordinate system by using coordinate transformations resident in the navigation software.

All the coordinate systems referenced are right-handed Cartesian systems. These right-handed systems have three mutually perpendicular axes, sequentially ordered such that each axis satisfies the application of the right-hand rule to the other two axes (XYZ system: applying right-hand rule to X-Y yields Z, to Y-Z yields X, and to Z-X yields Y).

Body Axis Coordinate System

The body axis coordinate system maintains the origin at the orbiter's center of mass with the three axes stemming from that point. The X axis is parallel to the X_O axis of the orbiter structural body (orbiter + external tank + solid rocket boosters) and lies in the orbiter plane of symmetry. The positive direction is toward the nose. The Z axis is parallel to the orbiter plane of symmetry and perpendicular to the X axis. The positive direction is down with respect to the fuselage. The Y axis completes the right-handed orthogonal system and points out of the right wing. Note that vehicle pitch means rotation about the Y body axis, roll means rotation about the X body axis, and yaw means rotation about the Z body axis.

Mean of 1950 (M50) Coordinate System

The inertial coordinate system used by the on-board navigation system is the Aries Mean of 1950 Cartesian system, generally called the M50 system.

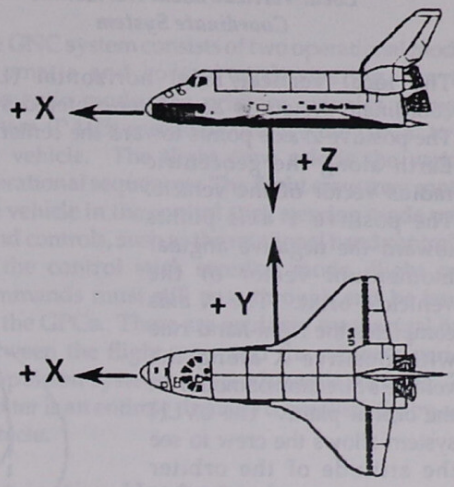

Body Axis Coordinate System

The M50 system is used to establish and maintain the inertial position and velocity of the orbiter during all flight phases. The X axis points toward the mean vernal equinox (the apparent point on the celestial sphere where the Sun crosses the Earth's equator on its northward journey) of the year 1950. The Z axis points along Earth's mean rotational axis of 1950 with the positive direction toward the North Pole. The Y axis completes the right-handed system, with the corresponding X-Y plane lying in the plane of the equator. Note that this is an inertial system and, although its origin is at the Earth's center, the M50 system is completely independent of the Earth's rotation.

Starball Coordinate System

The Starball coordinate system, a variation of the M50 system, places the origin at the orbiter's center of gravity. Such a configuration sets the X axis at 0 degrees declination and 0 degrees right ascension on the celestial sphere. The Starball orientation makes the pitch angle equivalent to the right ascension and the yaw angle equivalent to declination, thus simplifying maneuvers to point at stars. This coordinate system is not applied often; rather, star positions are tabulated in M50 coordinates to permit use of the inertial reference frame whenever possible.

Local Vertical/Local Horizontal Coordinate System

The local vertical/local horizontal (LVLH) coordinate system is an orbiter-centered system. The positive Z axis points toward the center of the Earth along the geocentric radius vector of the vehicle. The positive Y axis points toward the negative angular momentum vector of the vehicle's orbit. The X axis completes the right-hand rule with positive X along the vehicle's direction of motion in the orbital plane. The LVLH system allows the crew to see the attitude of the orbiter in relation to the Earth's surface. It is not an inertial system, because it rotates at approximately 4 degrees/second with respect to the inertial frame.

Runway Coordinate System

For launch, landing, and Earth observation, it is advantageous to know the orbiter's position and velocity in coordinate systems fixed to the Earth. These non-inertial systems are related to the M50 system by transformations that depend on time, Earth rotation rate, and the latitude and longitude of the point of interest. The runway coordinate system is a good example of an Earth-fixed reference frame. The origin of the system is placed at the runway center at the approach threshold. The Z axis is normal to the ellipsoid model through the runway centerline and positive toward the center of the Earth. The X axis is perpendicular to the Z axis and lies in a plane containing the Z axis and the runway centerline (positive in the direction of landing). The Y axis completes the right-hand rule. Note that A is the runway azimuth measured in the X-Y plane from true north to the positive X axis (positive clockwise). The runway coordinate system is used by navigation and the crew during ascent, entry, and landing phases of flight.

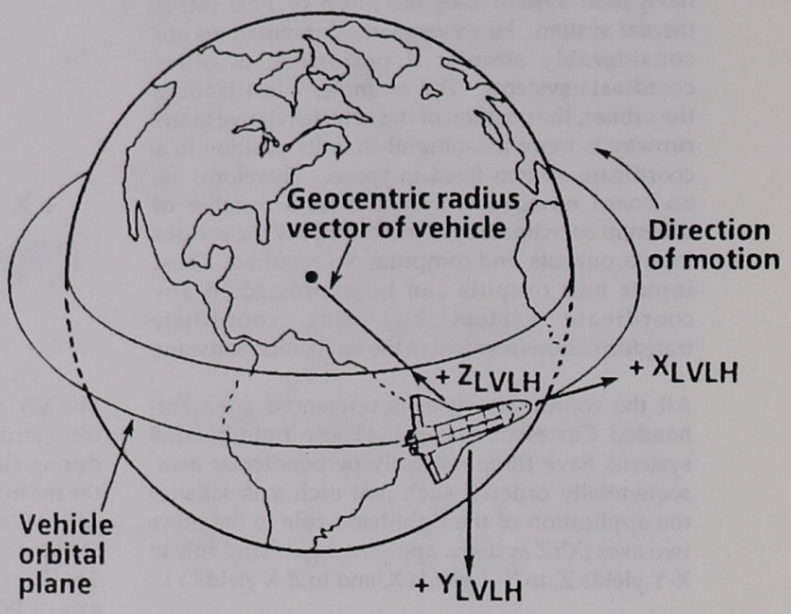

LVLH Coordinate System

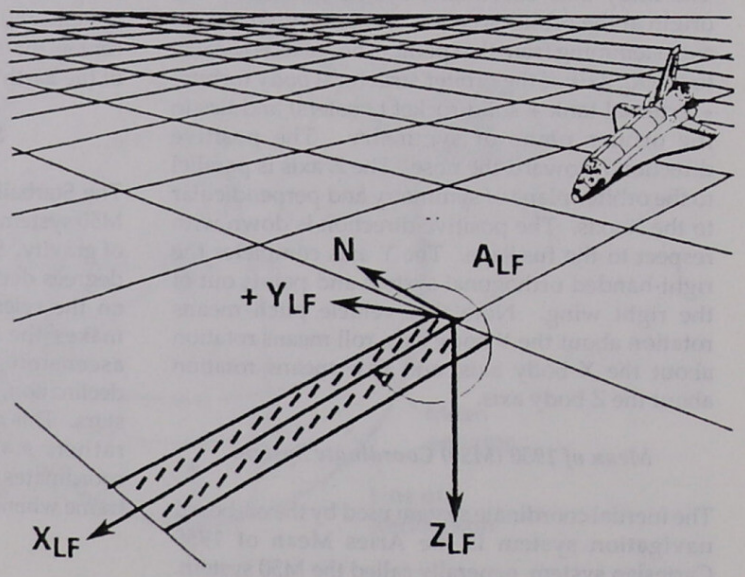

Runway Coordinate System

Guidance, Navigation, and Control Software

Guidance, navigation, and control (GNC) software commands the GNC system to effect vehicle control and to provide sensors and controllers with the data needed to compute these commands. The process involves three steps:

1. Guidance equipment and software compute the orbiter location required to satisfy mission requirements.
2. Navigation tracks the vehicle's actual location.
3. Flight control transports the orbiter to the required location.

During launch and ascent, most of the GNC commands are directed to gimbal the three SSMEs and two SRBs to maintain thrust vector control. The GNC software also controls SSME burns for maximum aerodynamic loading of the vehicle during ascent, referred to as max q. To circularize the orbit and perform on-orbit and deorbit maneuvers, the GNC software commands the orbital maneuvering system (OMS) engines. At external tank separation, on orbit, and during portions of entry, GNC controls commands to the reaction control system (RCS). In atmospheric flight, GNC controls the orbiter aerodynamic flight control surfaces.

Control Modes

The GNC system consists of two operational modes: automatic and control stick steering. In the automatic mode, the primary avionics software system (PASS) essentially allows the GPCs to fly the vehicle. The flight crew selects the various operational sequences. The flight crew may control the vehicle in the control stick steering mode using hand controls, such as the rotational hand controller. In the control stick steering mode, flight crew commands must still pass through and be issued by the GPCs. There are no direct mechanical links between the flight crew and the orbiter's various propulsion systems or aerodynamic surfaces. The orbiter is an entirely digitally controlled, fly-by-wire vehicle.

Navigation Hardware

The navigation system uses measurements from onboard sensors to improve its estimate of the state vector. These sensors and the physical data they sense include:

- Inertial measurement unit (IMU) — senses vehicle orientation in inertial space and accelerations along inertial axes.

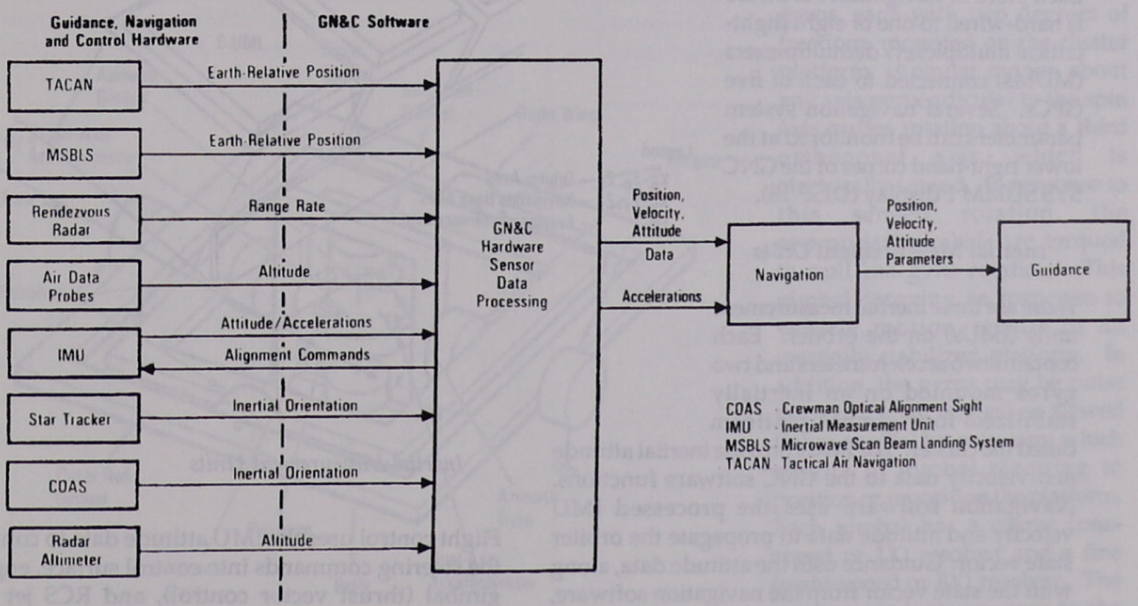

Navigation Interfaces

- Star trackers — sense vehicle line of sight vectors to stars or orbiting targets.
- Crew optical alignment sight (COAS) — allows the crew to visually align the vehicle line of sight to stars or orbiting targets. COAS serves as a backup to star trackers.
- Tactical air navigation (TACAN) — senses vehicle position with respect to a ground-based TACAN station.
- Air data system — senses air temperature and pressure in free stream and air disturbed by vehicle.
- Microwave scanning beam landing system (MSBLS) — senses vehicle position with respect to ground stations alongside the landing runway.
- Radar altimeters (RA) — sense vehicle altitude above the ground.

NOTE

Radar altimeter altitude is not used for navigation or guidance. The information is displayed for the crew to monitor.

Each piece of navigation hardware is hard-wired to one of eight flight-critical multiplexer/demultiplexers (MDMs) connected to each of five GPCs. Several navigation system parameters can be monitored at the lower right-hand corner of the GNC SYS SUMM 1 display (DISP 18).

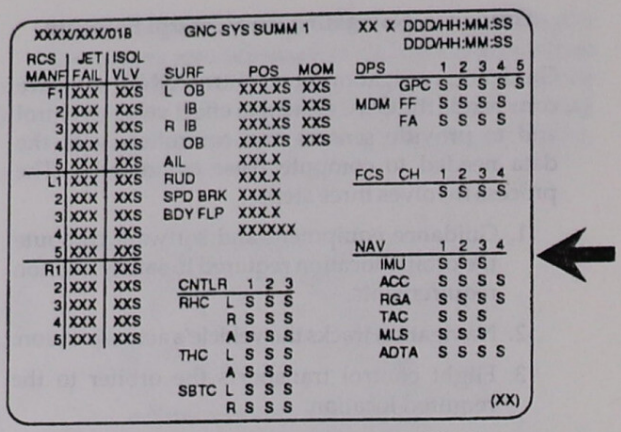

Navigation System Parameters on DISP 18
GNC SYS SUMM 1 Display

Inertial Measurement Units

There are three inertial measurement units (IMUs) on the orbiter. Each contains two accelerometers and two gyros mounted on an inertially stabilized four-gimbal platform called the cluster. The IMUs provide inertial attitude and velocity data to the GNC software functions. Navigation software uses the processed IMU velocity and attitude data to propagate the orbiter state vector. Guidance uses the attitude data, along with the state vector from the navigation software, to develop steering commands for flight control.

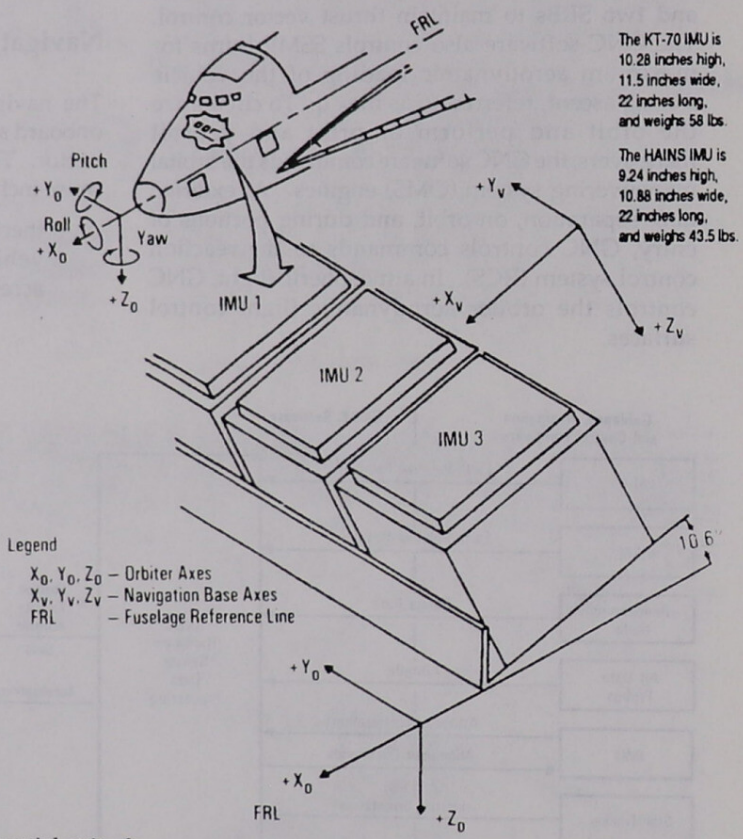

Inertial Measurement Units

Flight control uses the IMU attitude data to convert the steering commands into control surface, engine gimbal (thrust vector control), and RCS jet fire commands.

Although flight could be accomplished with only one IMU, three units are installed on the orbiter for redundancy. Updated IMUs, called HAINS (high-accuracy inertial navigation system) IMUs, may be combined with earlier model KT-70 IMUs to form a set, although the HAINS IMUs have some different operational characteristics. The IMUs are mounted on the navigation base, which is located inside the crew compartment flight deck forward of the flight deck control and display panels. The base provides a platform on which the IMUs can be repeatedly mounted with great accuracy, enabling the definition of transformations that relate IMU reference frame measurements to any other reference frame.

The IMU consists of a platform isolated from vehicle rotations by four gimbals. Since the platform does not rotate with the vehicle, its orientation remains fixed, or inertial, in space. The gimbal order from outermost to innermost is outer roll, pitch, inner roll, and azimuth. The platform is attached to the azimuth gimbal. The inner roll gimbal is a redundant gimbal used to provide an all-attitude IMU while preventing the possibility of gimbal-lock (a condition that can occur with a three-gimbal system and cause the inertial platform to lose its reference). The outer roll gimbal is driven from error signals generated by disturbances to the inner roll gimbal. Thus, the inner roll gimbal will remain at its null position, orthogonal to the pitch gimbal.

Two accelerometers in each IMU measure linear vehicle accelerations in the IMU inertial reference frame; one measures the acceleration along the platform's X and Y axes, the other along the Z axis. The HAINS IMUs have three accelerometers, one on each of the X, Y, and Z axes. The accelerometer is basically a force rebalance-type instrument. When the accelerometer experiences an acceleration along its input axes, it causes a pendulum mass displacement. This displacement is measured by a pick-off device, which generates an electrical signal that is proportional to the sensed acceleration. This signal is amplified and returned to a torquer within the accelerometer, which attempts to reposition the proof mass to its null (no output) position.

The acceleration data measured by the accelerometers are the primary sources for the three position and three velocity components of the state vector used during ascent and entry. On orbit, a sophisticated drag model is substituted for IMU velocity information, except during large vehicle accelerations. During large on-orbit accelerations, IMU velocity data are used in navigation calculations.

The inertial sensors consist of two gyros, each with two degrees of freedom, mounted on the cluster platform. Angular motion about any axis perpendicular to the spin axis causes rotation about a third orthogonal axis, which is electrically sensed. In response to this sensed rotation, the appropriate gimbals are torqued to null the gyro rotation. This gimbal torquing in response to vehicle motion results in an inertially stabilized platform. In addition, the gyros may be pulse torqued (small angles) or slewed (large angles) by software, which results in gimbal torquing to position or reposition the platform. Each gimbal has a coarse (one-speed or 1X) resolver and a fine (eight-speed or 8X) resolver. The resolver readouts are sent to the

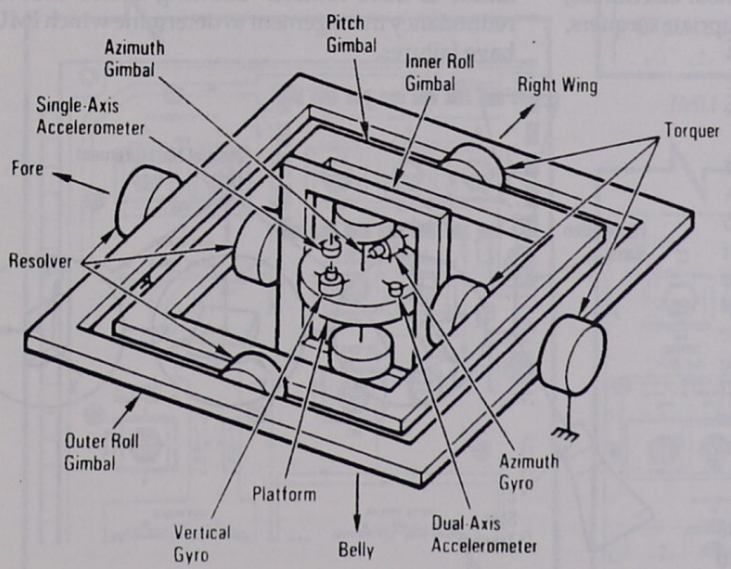

IMU Platform Assembly

data processing system, which determines the gimbal angles, which in turn determine the attitude of the orbiter.

One gyro, the *vertical gyro*, is oriented so its input axes are aligned with the X and Y platform axes; its input axes provide IMU platform roll and pitch stabilization. The second gyro is oriented so that one input axis lies along the platform's Z axis, and the other lies in the X-Y plane. This gyro, the *azimuth gyro*, provides platform yaw stabilization with the Z input axis, while the second input axis is used as a platform rate detector for built-in test equipment. Each gyro contains a two-axis pick-off that senses deflection of the rotating wheel. The gyro also contains a pair of two-axis torquers that provide compensation torquing for gyro drift and a means to reposition the platform.

The spin axis of a gyro is its axis of rotation. The inertial stability of the spin axis is a basic property of gyroscopes and is used in stabilization loops, which consist of the gyro pick-off, gimbals, and gimbal torquers. When the vehicle is rotated, the platform also tends to rotate due to friction at the gimbal pivot points. Since the gyro casing is rigidly mounted to the platform, it will also rotate. The gyro resists this rotation tendency to remain inertial, but the resistance is overcome by friction. This rotation is detected by the pick-offs as a deflection of the rotating gyro wheel. A signal proportional to this deflection is sent to the gimbal electronics, which route the signals to the appropriate torquers, which in turn rotate their gimbals to null the pick-off point. When the output is nulled, the loop is closed.

Four resolvers in an IMU are used to measure vehicle attitude. A resolver is located at one of two pivot points between adjacent gimbals. The IMU resolvers are electromechanical devices that apply the principle of magnetic induction to electrically measure the angle between two adjacent gimbals. This electrical signal is then transformed into a mechanical angle by the IMU electronics.

The single gimbal angle measurements are used to determine vehicle attitude. Attitude information is used by flight control for turn coordination and steering command guidance. An attitude director indicator displays attitude and navigation data.

Platform attitude can be reoriented by slewing or pulse torquing. Slewing rotates the platform at a high rate (72 degrees per minute), and pulse torquing rotates it very slowly (0.417 degree per minute). Platform reorientation relies on another property of gyroscopes: precession. If a force is applied to a spinning gyroscope, the induced motion is 90 degrees from the input force. In each IMU, a two-axis torquer is located along the input axes of both gyros. Commands are sent to the torquers from the GPC to apply a force along the input axes. The result is a deflection of the gyro spin axis that is detected and nulled by the stabilization loops. Since the gyro spin axis is forced to point in a new direction, the platform has to rotate to null the gyro outputs.

The three IMUs have skewed orientations: their axes are not co-aligned and are not aligned with the vehicle axes. This is done for two reasons. First, gimbaled platforms have problems at certain orientations. Skewing ensures that no more than one IMU will have an orientation problem for a given attitude. Second, skew allows resolution of a single-axis failure on one IMU by multiple axes on another IMU since the possibility of multiple-axis failure is more remote. Skewing is also used by redundancy management to determine which IMUs have failures.

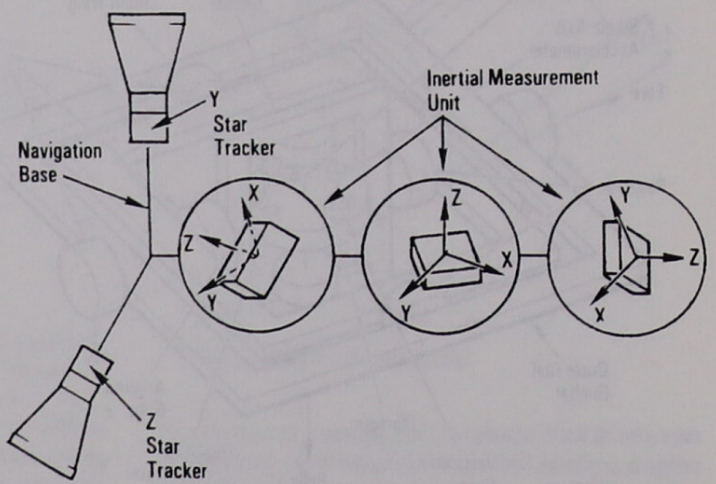

IMU Skew

Each IMU contains heaters, temperature sensors, a pressure sensor, and built-in test equipment (BITE). Very precise thermal control must be maintained in order to meet IMU performance requirements. The IMU thermal control system consists of an internal heater system and a forced-air cooling system. The internal heater system is completely automatic and is activated when power is initially applied to the IMU. It continues to operate until the IMU is powered down. The forced-air cooling consists of three fans that serve all three IMUs. Each IMU fan is controlled by an individual *IMU FAN* switch located on panel L1. Only one fan is used at a time; three are provided for redundancy.

Each IMU is supplied with redundant 28-volt dc power through separate remote power controllers. The *IMU 1*, 2, and 3 power switches are located on panels O14, O15, and O16. Loss of one control bus or one main bus will not cause the loss of an IMU.

Each IMU has two modes of operation: a warm-up/standby mode and an operate mode. When an IMU switch is positioned to *ON*, the IMU is powered in the warm-up/standby mode, which applies power only to the heater circuits. It takes approximately 24 hours (HAINS takes 8 hours from cold start) for the IMU to reach its operating temperature range, at which time the IMU enters a

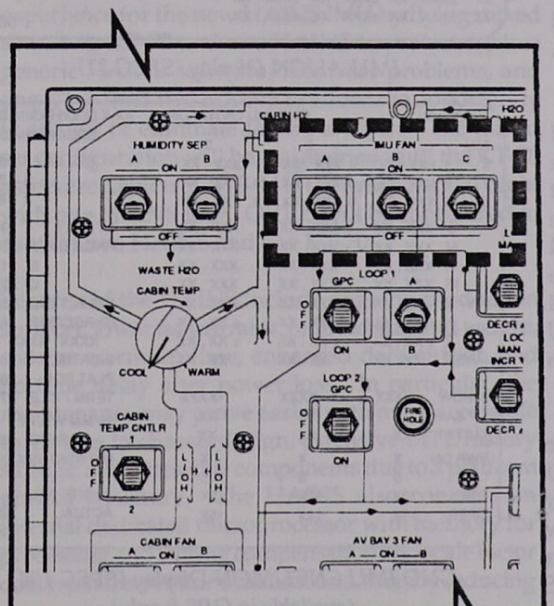

IMU FAN ON/OFF Switches on Panel L1

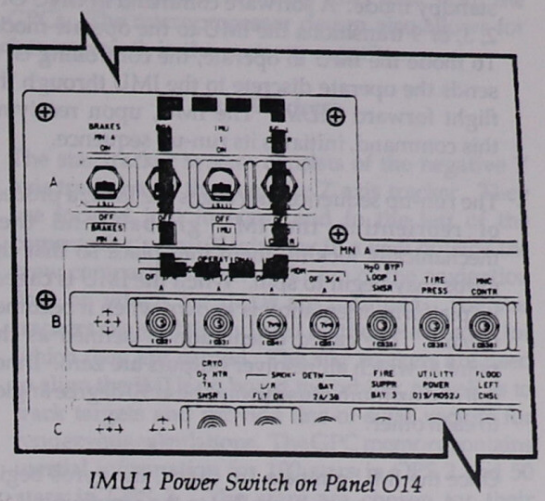

IMU 1 Power Switch on Panel O14

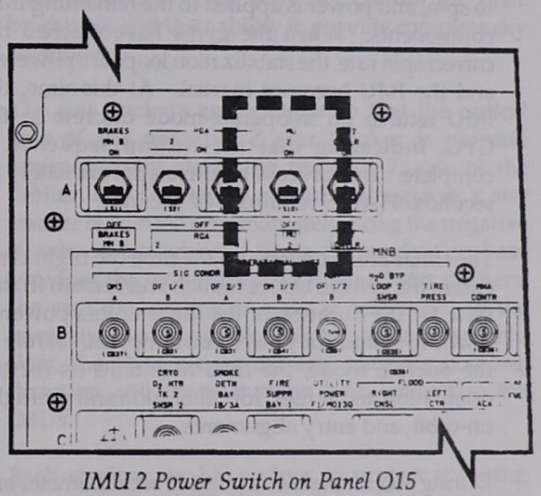

IMU 2 Power Switch on Panel O15

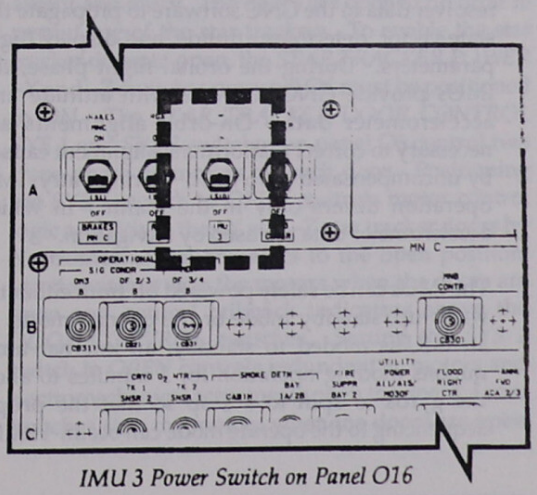

IMU 3 Power Switch on Panel O16

standby mode. A software command in GNC OPS 2, 3, or 9 transitions the IMU to the operate mode. To mode the IMU to operate, the controlling GPC sends the operate discrete to the IMU through the flight forward MDM. The IMU, upon receiving this command, initiates its run-up sequence.

The run-up sequence first cages the IMU, a process of reorienting the IMU gimbals and then mechanically locking them into place so that the gyros may begin to spin. When the IMU is caged, its platform orientation is known when it becomes inertial. The caged orientation is defined as the point at which all resolver outputs are zero. Inner roll and azimuth must always be at 90 degree angles to each other.

Once the IMU gimbals are caged, the gyros begin to spin, and power is applied to the remaining IMU components. When the gyros have reached the correct spin rate, the stabilization loops are powered, and the IMU becomes inertial. At this time, the IMU returns an in-operate-mode discrete to the GPC, indicating that the run-up sequence is complete. This process requires approximately 38 seconds. HAINS requires 84.7 seconds.

The IMUs are in operate by the time the flight crew enters the vehicle before launch and remain in that state for the duration of the flight unless powered down to minimize power consumption. While in the operate mode, the IMU maintains its inertial orientation and is used for calibration and preflight, on-orbit, and entry alignments.

During ascent, the IMUs provide accelerometer and resolver data to the GNC software to propagate the state vector, determine attitude, and display flight parameters. During the orbital flight phase, the IMUs provide GNC software with attitude and accelerometer data. On-orbit alignments are necessary to correct platform misalignment caused by uncompensated gyro drift. During entry, IMU operation differs only in the manner in which accelerometer data are used by navigation.

The IMUs can be safely powered off from either the warm-up/standby mode or the operate mode. If an IMU is moded to standby, an internal timer inhibits moding operation for 3 minutes to allow the gyros to spin to a stop so that the proper sequencing to the operate mode can occur. HAINS IMUs have no 3-minute timer. Instead, a braking system is used to ensure that the gyros have slowed to a stop.

The IMU software scheme is designed to select the best data for GPC use and to detect system failures. This scheme is referred to as redundancy management. IMU parameters can be accessed using the IMU ALIGN display (SPEC 21) and the GND IMU CNTL/MON display (SPEC 104).

In the event of an IMU dilemma, the *IMU* caution and warning light on panel F7 will be illuminated. (The light will not illuminate for a redundancy

```
XXXX/021/                    IMU ALIGN        XX X DDD/HH:MM:SS
IMU                                           DDD/HH:MM:SS

        1S    2S    3S
STAT  XXXX  XXXX  XXXX          ALIGN XXX
TEMP    XX    XX    XX   IMU 1 10X STAR ALIGN 13X
STBY   21X   22X   23X       2 11X 14 IMU/IMU    X
OPER    4X    5X    6X       3 12X MATRIX      15X
DES     7X    8X    9X
                                      EXEC    16X
 ACC                                  TERM    17
        1     2     3
 X ±X.XX ±X.XX ±X.XX          IMU  BITE MASK
 Y ±X.XX ±X.XX ±X.XX            1  XXXX  24X
 Z ±X.XX ±X.XX ±X.XX            2  XXXX  25X
                                3  XXXX  26X
 ANG
        1        2        3
 X   XXX.XX   XXX.XX   XXX.XX
 Y   XXX.XX   XXX.XX   XXX.XX     NAV ΔV THRESH
 Z   XXX.XX   XXX.XX   XXX.XX     18 XXXXXXX
ΔX  ±XXX.XX  ±XXX.XX  ±XXX.XX
ΔY  ±XXX.XX  ±XXX.XX  ±XXX.XX     MM READ 19X
ΔZ  ±XXX.XX  ±XXX.XX  ±XXX.XX
                                              (XX)
```

IMU ALIGN Display (SPEC 21)

```
XXXX/104/                  GND IMU CNTL/MON   XX X DDD/HH:MM:SS
                                              DDD/HH:MM:SS
IMU        1          2          3
X   1 XXX.XX   4 XXX.XX   7 XXX.XX          SEL IMU 1  16X
Y   2 XXX.XX   5 XXX.XX   8 XXX.XX                  2  17X
Z   3 XXX.XX   6 XXX.XX   9 XXX.XX                  3  18X

    O XXX.XX   XXX.XX     XXX.XX       ATT DET      19X
    M XXX.XX   XXX.XX     XXX.XX       HNGR CAL A   20X
    I XXX.XX   XXX.XX     XXX.XX                B   21X
   IR XXX.XX   XXX.XX     XXX.XX                C   22X
  V X ±XX.XX   ±XX.XX     ±XX.XX       PREFLT CAL   23X
    Y ±XX.XX   ±XX.XX     ±XX.XX       GYROCOMP     24X
    Z ±XX.XX   ±XX.XX     ±XX.XX         XXXX XXXX
 VRSS XX.XX    XX.XX      XX.XX        INERTIAL     25X
                                       PLAT POS     26X
B|HDW  XXXX      XXXX       XXXX       TERM / IDLE  27X
I| S/W  XX        XX         XX        28 MM WRITE   X
T|STAT  XX        XX         XX              READ   29X
PWR ON   X         X          X        MM STATUS XXXX
I/O      S         S          S
STBY   10X       11X        12X        30 SITE SEL   X
OPER   13X       14X        15X        ACTUAL      XXX
                                                  (XX)
```

GND IMU CNTL/MON Display (SPEC 104)
(available in OPS 9 only)

management fail.) If temperatures are out of limits or if BITE detects a failure, a fault message (IMU BITE/T X) and *SM ALERT* will be annunciated.

The accuracy of the IMU deteriorates with time. If the errors are known, they can be physically or mathematically corrected. Software based on preflight calibrations is used to compensate for most of the inaccuracy. The star trackers and COAS are used to determine additional errors.

The IMU subsystem operating program (SOP) processes and converts the data from the IMUs. The following computations are performed in the IMU SOP: conversion of velocities to the M50 coordinates, conversion of resolver outputs to gimbal angles, computation of accelerations for displays, performance of additional software BITE checks, support of selection, control, and monitoring of IMU submodes of the operate mode, and computation of torquing commands based on the misalignment determined by the star trackers, crew optical alignment sight, or another IMU. Misalignments are due to gyro drifts.

HAINS IMUs

A new high-accuracy inertial navigation system (HAINS) is being phased in to augment and eventually replace the present KT-70 IMU. The flight operations plan specifies a buildup of flight experience for the new HAINS IMU by flying mixed sets: two KT-70 and one HAINS to protect against generic HAINS software/firmware problems, and one KT-70 and two HAINS to afford the opportunity to reduce or eliminate failure analysis. The mixed set configuration will be maintained until the KT-70 assets are depleted. STS-44 is the first potential flight with one HAINS unit. OV105 will be configured to contain two HAINS and one KT-70.

Benefits of the HAINS include ongoing production support, lower failure rates, reduced size and weight, shorter warm-up time, enhanced data output, and no time delay after power loss. In particular, the maintenance may prove easier with more accessible cards due to chassis design, extensive BITE history storage, and accessible components due to a platform gimbal structure. The HAINS also contains an internal dedicated microprocessor with memory for processing and storing compensation and scale factor data from the vendor's calibrations, thereby reducing the need for extensive initial load data from the GPCs. The microprocessor design also allows for future growth in the memory capacity.

Star Trackers

The star tracker system consists of the negative Y axis tracker and the negative Z axis tracker. They are located just forward and to the left of the commander's plus X window in a well outside the crew compartment, an extension of the navigation base on which the IMUs are mounted. The star trackers are slightly inclined off the vehicle axes for which they are named. The star trackers are used to align the IMUs on board the orbiter, as well as to track targets and provide line-of-sight vectors for rendezvous calculations. The GPC memory contains inertial information for 100 stars in OPS 2 and 50 stars in OPS 3. The stars are chosen for their brightness and their ability to provide complete sky coverage.

The star trackers are oriented so that the optical axis of the negative Z star tracker is pointed approximately along the negative Z axis of the orbiter, and the optical axis of the negative Y star tracker is pointed approximately along the negative Y axis of the orbiter. Since the navigation base provides the mount for the IMUs and star trackers, the star tracker line of sight is referenced to the navigation base and the orbiter coordinate system; thus, the GPC knows the star tracker's pointing direction and its orientation with respect to the IMUs.

Each star tracker has a door to protect it during ascent and entry. The doors are opened on orbit to permit use of the star trackers. To enable the star tracker doors to open, the *STAR TRACKER POWER –Y* and *–Z* switches on panel O6 must be positioned to *ON*. The *STAR TRACKER DOOR CONTROL SYS 1* and *SYS 2* switches on panel O6 control two three-phase ac motors on each door. Positioning the *SYS 1* switch to *OPEN* controls motor control logic and drives the –Y and –Z star tracker doors by electromechanical actuators to the open position. Limit switches stop the motors when the doors are open and control talkback indicators above the *DOOR CONTROL* switches. Setting the *SYS 2* switch to *OPEN* controls redundant ac motors and electromechanical actuators to open the doors. Limit switches stop the motors when the doors are open

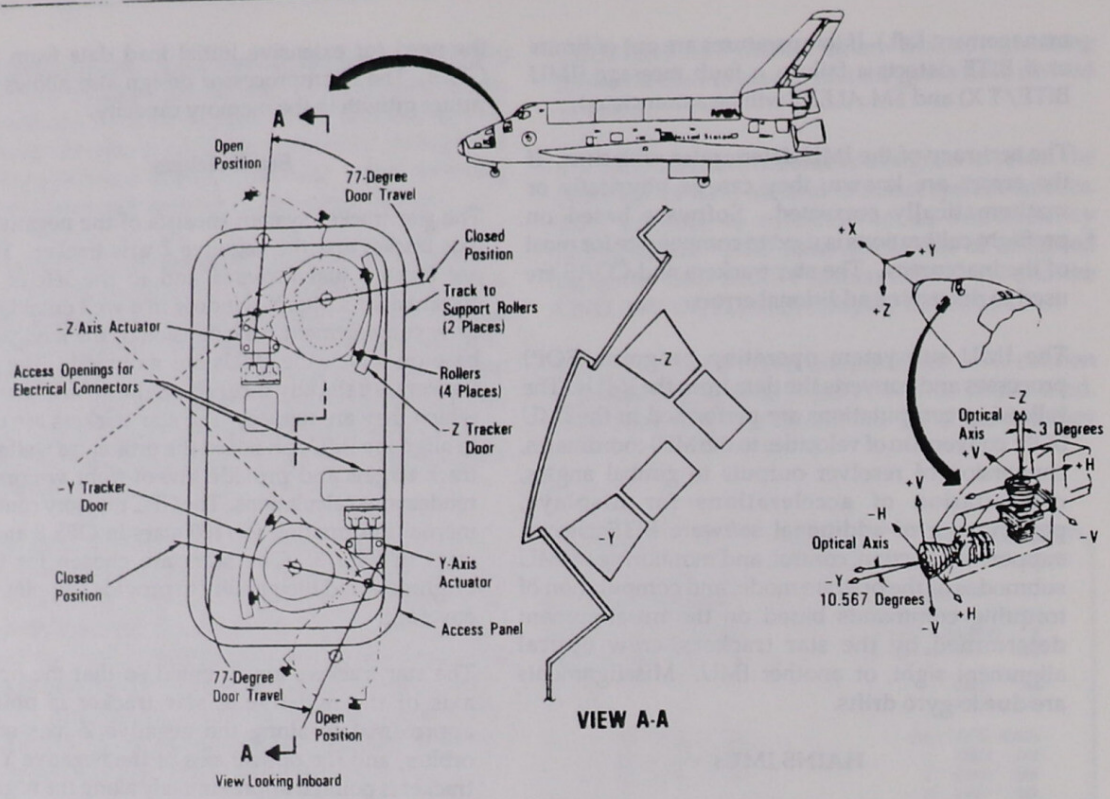

Star Trackers

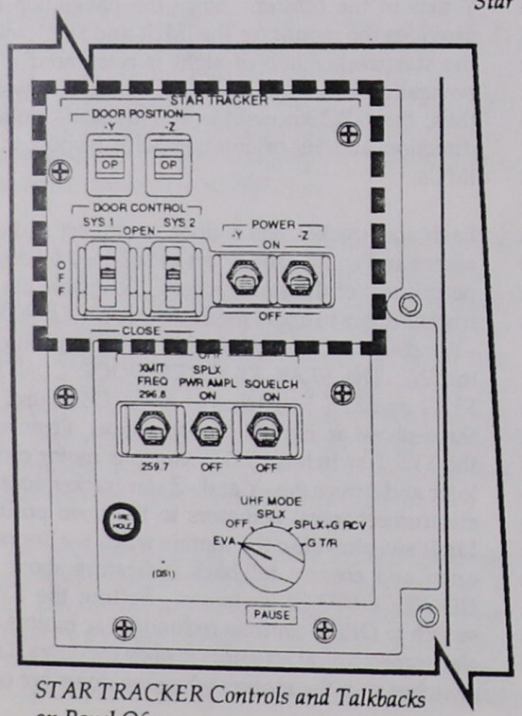

STAR TRACKER Controls and Talkbacks on Panel O6

and control the same two talkback indicators above the *DOOR CONTROL SYS 1* and *SYS 2* switches. Normally, both the *SYS 1* and *SYS 2* switches are used together to actuate the star tracker doors.

Positioning the *SYS 1* switch to *CLOSE* drives the system 1 motors and closes the –Y and –Z doors; the talkback indicators above the switches indicate *CL*. Setting the *SYS 2* switch to *CLOSE* drives the system 2 motors and closes the –Y and –Z doors; the talkback indicators above the switches indicate *CL*. The indicators are barberpole when a door is between open and closed. The door opening or closing time with two motors is 6 seconds; with one motor, it is 12 seconds.

The *OFF* position of the *SYS 1* or 2 switch removes power from the corresponding motor control logic circuitry.

The star trackers are used to align the IMU inertial platforms. A star tracker searches for, acquires, and tracks stars whose approximate position is

determined by the IMUs. By knowing the relationship of the star tracker to the orbiter and the location of the star in space, a line-of-sight vector from the orbiter to the star is defined. Two such vectors define the orbiter inertial attitude.

The difference between the inertial attitudes defined by the star tracker and the IMU is processed by software and results in IMU torquing angles. If the IMU gimbals are physically torqued, or the matrix defining its orientation is recomputed, the effects of the IMU gyro drift are removed, and the IMU is restored to its inertial attitude. If the IMU alignment is in error by more than 1.4 degrees, the star tracker may be unable to acquire and track stars. In this case, the COAS must be used to realign the IMUs to within 1.4 degrees; the star trackers can then be used to realign the IMUs more precisely.

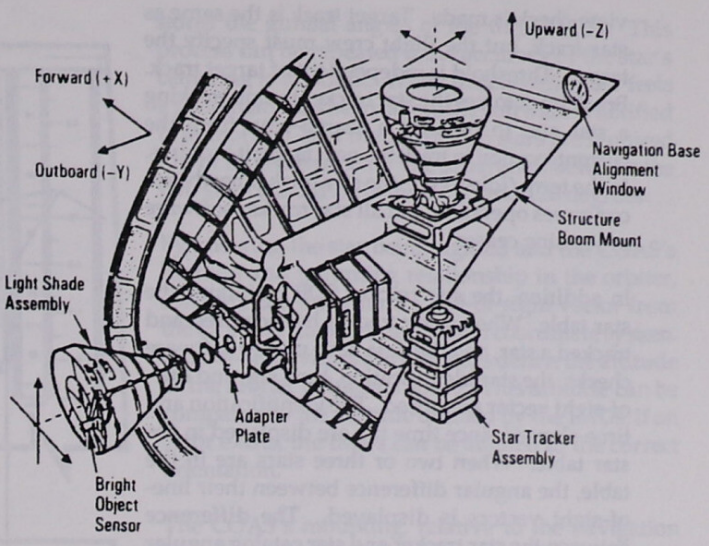

View into Star Tracker Cavity

NOTE

The star tracker cannot be used if the IMU alignment error is greater than 1.4 degrees because the angles the star tracker is given for searching are based on current knowledge of the orbiter attitude, which is based on IMU gimbal angles. If that attitude is greatly in error, the star tracker may acquire and track the wrong star.

In addition to aligning the IMUs, the star trackers can be used to provide angular data from the orbiter to a target. This capability can be used during rendezvous or proximity operations.

The star tracker includes a light shade assembly and an electronics assembly mounted on top of the navigation base. The light shade assembly defines the tracker field of view (10 degrees square). Its shutter mechanism may be opened manually by the crew using an entry on the S TRK/COAS CNTL display, or it can be opened and closed automatically by a bright object sensor or target suppress software. The bright object sensor reacts to close the shutter before a bright object, such as the Sun or Moon, can damage the star tracker (the sensor has a larger field of view than the star tracker shutter).

The electronics assembly contains an image dissector tube mounted on the underside of the navigation base. The star tracker itself does not move; the field of view is scanned electronically. The star tracker may be commanded to scan the entire field of view or a smaller offset field of view (1 degree square) about a point defined by horizontal and vertical offsets. An object is tracked when the proper intensity and the correct location are sensed. Star tracker outputs are the horizontal and vertical position within the field of view of the object being tracked and its intensity.

There is no redundancy management for the star tracker assemblies. They operate independently and can do the entire task. They can be operated either separately or concurrently.

The star tracker SOP supports the modes that are commanded manually from SPEC 22 S TRK/COAS CNTL: self-test, star track, target track, break track, and term/idle. Self-test consists of software and hardware tests. In the star track mode, the star tracker does an offset scan search for the star, acquires it, and tracks it. The star may be selected by the flight crew or GPC; in either case, a field-of-

view check is made. Target track is the same as star track, but the flight crew must specify the target. Threshold is independent of target track. Break track forces the star tracker to stop tracking a star and to perform a search scan from the current location to track the next target it acquires. In the term/idle mode, the star tracker hardware continues operation, but all star tracker software processing ceases.

In addition, the star tracker SOP maintains the star table. When a star tracker has acquired and tracked a star, and the data have passed software checks, the star identification, time tag, and line-of-sight vector are stored. The identification and time elapsed since time tag are displayed in the star table. When two or three stars are in the table, the angular difference between their line-of-sight vectors is displayed. The difference between the star tracker and star catalog angular differences is displayed as an error. The star tracker SOP selects line-of-sight vectors of two stars in the star table for IMU alignment and outputs an ALIGN ENA discrete. The software selects the star pair whose angular difference is closest to 90 degrees.

The flight crew may manually override the SOP selection or clear the table if desired. The SOP also determines and displays star tracker status. Star tracker parameters are accessible to the crew on the S TRK/COAS CNTL display (SPEC 22).

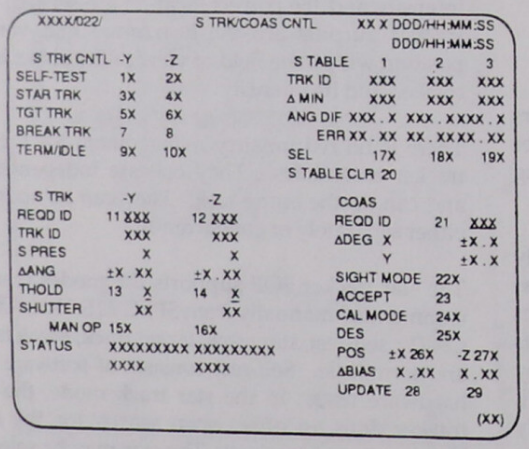

S TRK/COAS CNTL Display (SPEC 22)

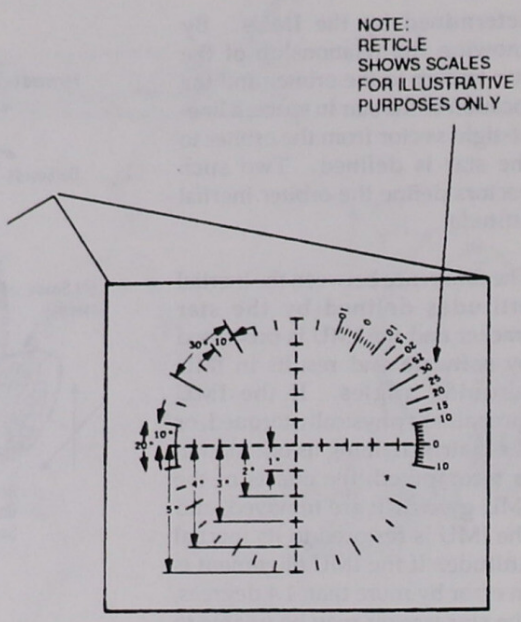

COAS Reticle Pattern

Crew Optical Alignment Sight (COAS)

The COAS is an optical device with a reticle focused at infinity projected on a combining glass. The reticle consists of a 10-degree-wide circle with 1-degree marks. A light bulb with variable brightness illuminates the reticle. The COAS requires 115-volt ac power for reticle illumination. The COAS is 9.5 by 6 by 4.3 inches and weighs 2.5 pounds.

The COAS is used if IMU alignment is in error by more than 1.4 degrees, rendering the star tracker unable to acquire and track stars. It is also used as a backup alignment device for failed star trackers.

The COAS can be mounted at either the commander's station to view along the +X axis or next to the aft flight deck overhead starboard window to view along the -Z axis. To use the COAS, the flight crewmember must manually maneuver the orbiter until the selected star is in the field of view. The crewmember then maneuvers the orbiter so that the star crosses the center of the reticle. At the instant of the crossing, the crewmember enters a mark by depressing the most convenient of the three *ATT REF* push buttons located on panels F6, F8, and A6U. At the time of the mark, software

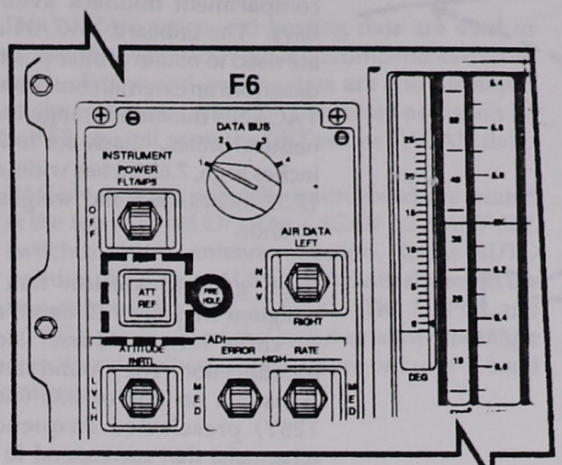

ATT REF Push Button on Panel F6

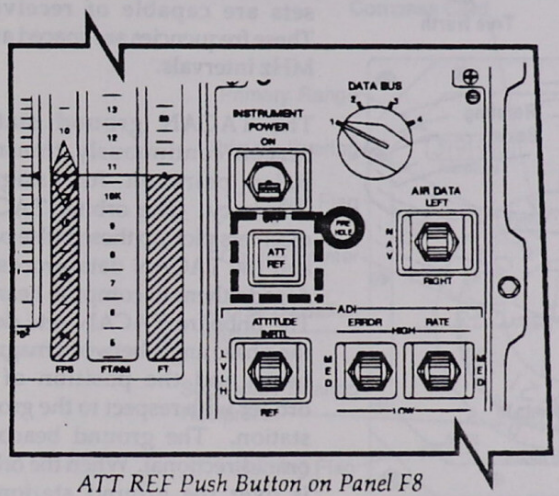

ATT REF Push Button on Panel F8

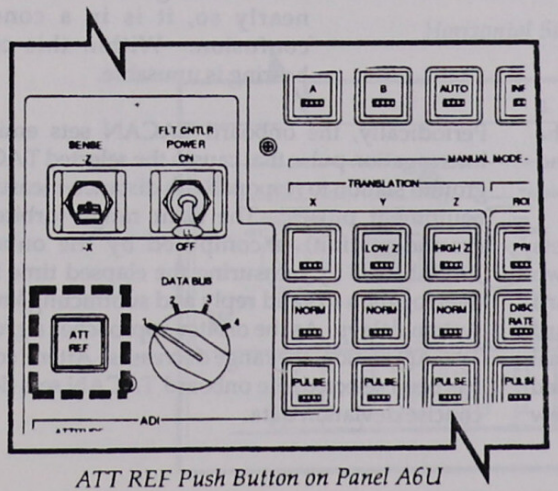

ATT REF Push Button on Panel A6U

stores the gimbal angles of the three IMUs. This process can be repeated if the accuracy of the star's centering is in doubt. When the crewmember feels a good mark has been taken, the software is notified to accept it. Good marks for two stars are required for an IMU alignment. The separation between the two stars should be between 60 and 120 degrees.

By knowing the star being sighted and the COAS's location and mounting relationship in the orbiter, software can determine a line-of-sight vector from the COAS to the star in an inertial coordinate system. Line-of-sight vectors to two stars define the attitude of the orbiter in inertial space. This attitude can be compared to the attitude defined by the IMUs; if an error exists, the IMUs can be aligned to the correct orientation.

The COAS's mounting, relative to the navigation base on which the IMUs are mounted, is calibrated before launch. The constants are stored in software, and COAS line-of-sight vectors are based on known relationships between the COAS line of sight and the navigation base. These constants are usually updated by the crew on orbit using a calibration mode to mark on a star while the IMUs are known to be correctly aligned.

COAS can also be used to visually track targets during proximity operations or to visually verify tracking of the correct star by the –Z star tracker.

COAS data processing is accomplished in the star tracker SOP. This SOP accepts and stores crew inputs on COAS location, star identification, or calibration mode, accepts marks, computes and stores the line-of-sight vectors, enables IMU alignment when two marks have been accepted, and computes, updates, and provides display data. COAS parameters may be accessed using the S TRK/COAS CNTL (SPEC 22) display (lower right).

Tactical Air Navigation

The onboard tactical air navigation (TACAN) units determine slant range and magnetic bearing of the orbiter to a TACAN or VHF omnirange tactical air navigation (VORTAC) ground station.

The ground-based TACAN and VORTAC stations constitute a global navigation system for military and civilian aircraft operating at L-band frequencies

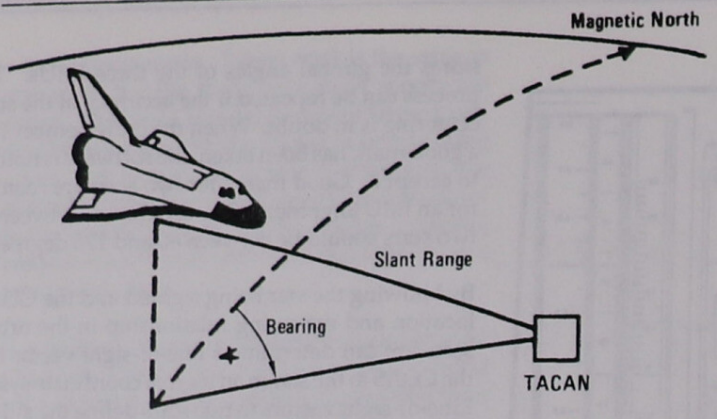

Tactical Air Navigation

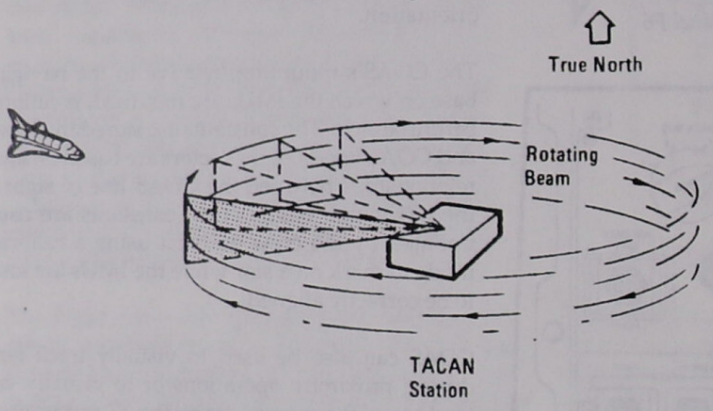

- TACAN station transmits RF burst when beam points to true north.
- Aircraft receiver times interval from burst to beam impingement and derives bearing.

TACAN Operation

(1 gigahertz). The TACAN unit includes a transmitter, a receiver, and a data processor. The data processor decodes the selected channel and sends the frequency to the receiver.

The orbiter is equipped with three TACAN sets that operate redundantly. Each TACAN has two antennas: one on the orbiter's lower forward fuselage and one on the orbiter's upper forward fuselage. The antennas are covered with thermal protection system tiles. The three convection-cooled TACAN sets are located in the orbiter crew compartment middeck avionics bays. The onboard TACAN sets are used to obtain orbiter position data from an external source entry. TACAN's maximum range is 400 nautical miles. Each set is 7.62 inches high, 7.62 inches wide, and 12.53 inches long and weighs 30 pounds.

Each ground station has an assigned frequency (L-band) and a three-letter Morse code identification. The ground station transmits on one of 252 (126X, 126Y) preselected frequencies (channels) that correspond to the frequencies the onboard TACAN sets are capable of receiving. These frequencies are spaced at 63-MHz intervals.

The TACAN ground station beacon continuously transmits pulse pairs on its assigned frequency. The orbiter TACAN receivers pick up these pulse pairs, and the TACAN data processors decode them to compute bearing. The onboard TACAN sets detect the phase angle between magnetic north and the position of the orbiter with respect to the ground station. The ground beacon is omnidirectional. When the orbiter is over the ground station, or nearly so, it is in a cone of confusion. Within this cone, bearing is unusable.

Periodically, the onboard TACAN sets emit an interrogation pulse that causes the selected TACAN ground station to respond with distance-measuring equipment pulses. The slant range (orbiter to ground station) is computed by the onboard TACAN sets by measuring the elapsed time from interrogation to valid reply and subtracting known system delays. As the orbiter approaches a ground TACAN station, the range decreases. After a course has been selected, the onboard TACAN sets derive concise deviation data.

The TACAN range and bearing data are used to update the state vector position components during entry. Range and bearing data are also displayed on the horizontal situation indicators on panels F6 and F8, as well as on the CRT as raw TACAN data.

TACAN controls, called the control head, are located at the top of panel O7. The *TACAN 1,2,3 ANT SEL* switches control antenna selection. In the *AUTO* position, the onboard GPCs automatically select the best antenna for that TACAN. The *UPPER* and *LOWER* positions of the switches allow the flight crew to manually select the upper or lower L-band antenna.

Each TACAN also has a *MODE* rotary switch on panel O7. The modes are *OFF*, receive (*RCV*), transmit and receive (*T/R*), and *GPC*. In the *GPC* mode, the onboard GPCs control TACAN ground station channel selection automatically, and both bearing and range are processed by hardware and software. In the *T/R* mode, both bearing and range are processed by hardware and software, but TACAN ground station channels are selected manually using the four *CHANNEL* thumbwheels for that TACAN on panel O7. The first three thumbwheels (left to right) select the channel (frequency), and the fourth selects the X or Y. In the *RCV* mode, only bearing is received and processed by the hardware; the thumbwheels for that TACAN are used to select the channel.

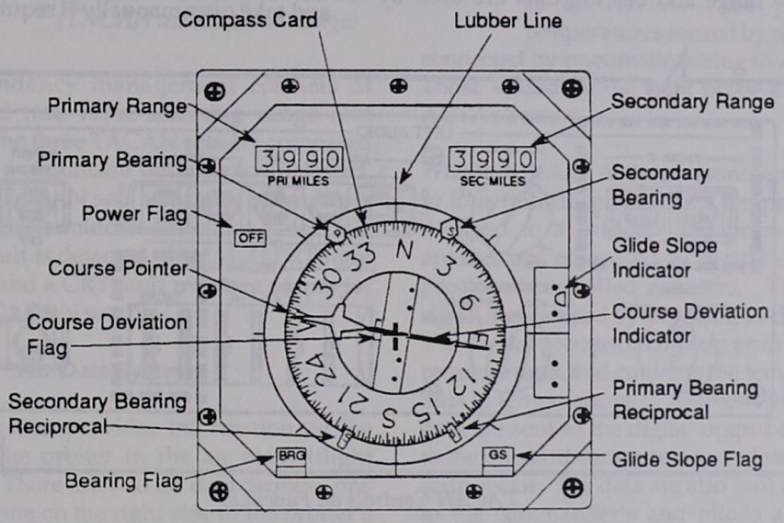

Horizontal Situation Indicator

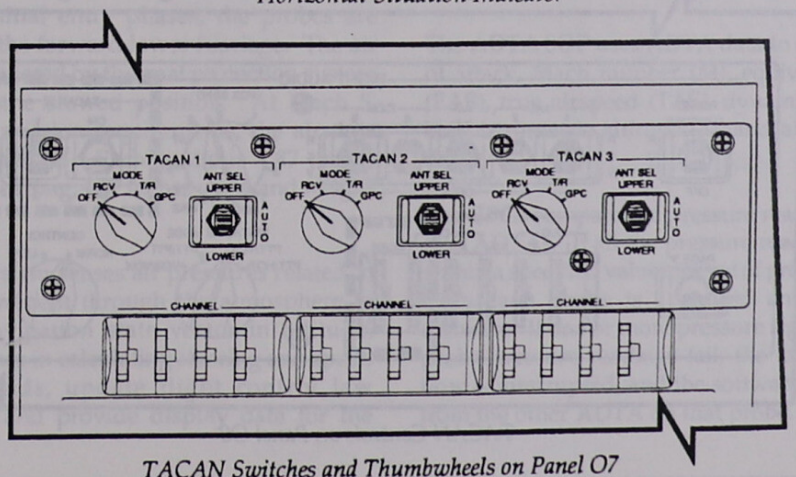

TACAN Switches and Thumbwheels on Panel O7

Approximately every 37 seconds, the selected TACAN ground station transmits its three-letter identification to the onboard TACAN. In order for the Morse code identification to be verified by the commander and pilot, *TACAN ID* audio controls are located on panel O5 (designated *LEFT AUDIO*) for the commander and panel O9 (designated *RIGHT AUDIO*) for the pilot. The *TACAN ID ON/OFF* switch is positioned to *ON* to receive the TACAN identification. The *TACAN ID 1, 2, 3* switch selects the onboard TACAN that will transmit the TACAN identification code. *VOLUME TACAN* thumbwheels on panels O5 and O9 control the volume setting of the TACAN identification code to the commander and pilot.

During entry, when at least two TACAN sets lock on, TACAN range and bearing data are used by navigation software to update the state vector until microwave scanning beam landing system (MSBLS) acquisition at approximately 18,000 feet.

TACAN azimuth and range (TAC AZ, RNG) are provided on the lower left side of the HORIZ SIT display (SPEC 50). TACAN range and bearing data cannot be used to produce a good estimate of the altitude position component, so navigation uses barometric altitude derived from the air data system probes, which are deployed by the fight crew at approximately Mach 5.

If MSBLS is not acquired, TACAN data can be used until an altitude of 1,500 feet. When runways with MSBLS are acquired, MSBLS operation is automatic. The flight crew is provided with the controls and displays necessary to evaluate MSBLS performance and take over manually if required.

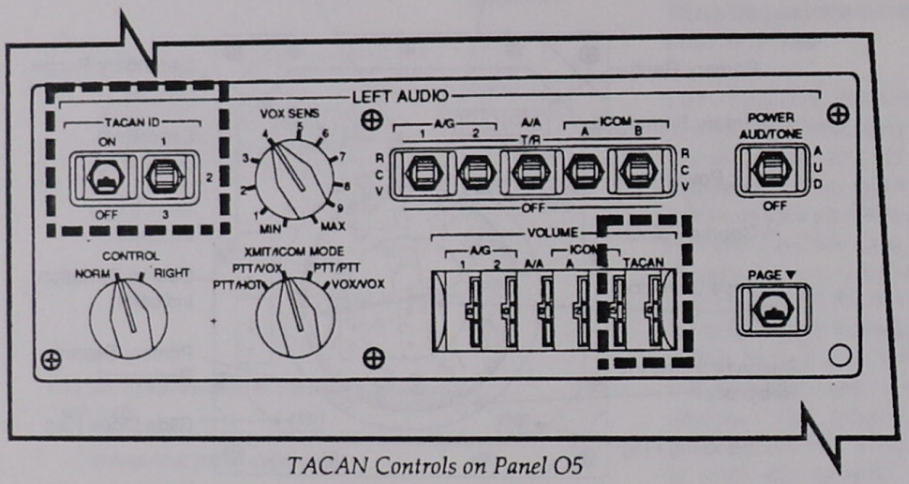

TACAN Controls on Panel O5

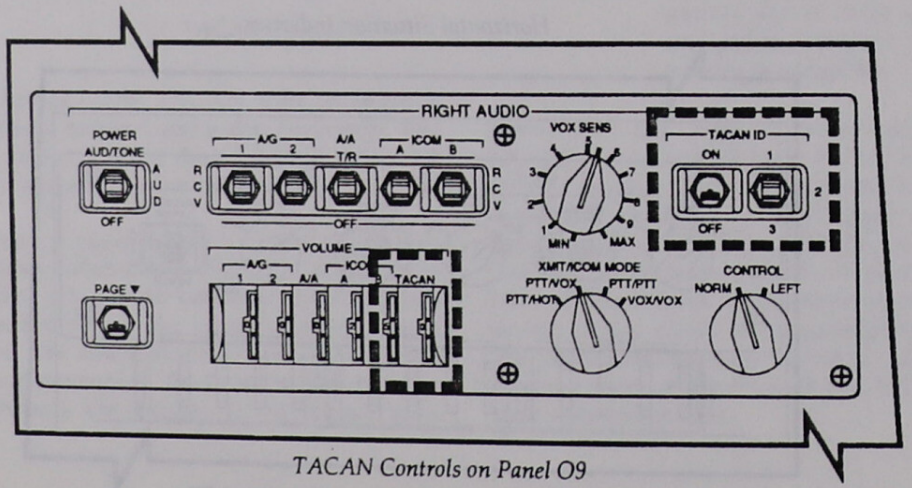

TACAN Controls on Panel O9

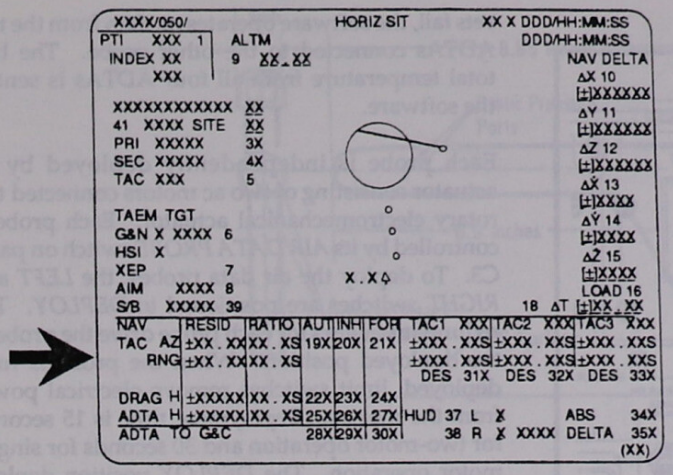

HORIZ SIT Display (SPEC 50)
(TACAN azimuth and range)

TACAN redundancy management consists of processing and mid-value-selecting range and bearing data. The three TACAN sets are compared to determine if a significant difference is detected. When all three TACAN sets are good, redundancy management selects middle values for range and bearing. If a fault is detected, the *SM ALERT* light is illuminated, and a CRT fault message occurs for the applicable TACAN set.

Air Data System

The air data system provides information on the movement of the orbiter in the air mass (flight environment). There are two air data probes: one on the left and one on the right side of the orbiter's forward lower fuselage. During the ascent, on-orbit, deorbit and initial entry phases, the probes are stowed inside the forward lower fuselage. The air data probe is covered by thermal protection system tiles while in the stowed position. At Mach 5, depending on mission requirements, the air data probes are deployed. Each probe is 4.87 inches high, 21.25 inches long, 4.37 inches wide, and weighs 19.2 pounds.

The air data system senses air pressures related to spacecraft movement through the atmosphere to update the navigation state vector in altitude, provide guidance in calculating steering and speed brake commands, update flight control law computations, and provide display data for the commander's and pilot's alpha/Mach indicators (AMIs), altitude/vertical velocity indicators (AVVIs), and CRTs. (The AMI and AVVI are described in detail in Section 2.7.)

Each air data probe has four pressure-port sensors and two temperature sensors. The pressures sensed include static pressure and angle-of-attack upper, center, and lower pressure. The four pressures are sensed at ports on each probe. The probe-sensed pressures are connected by a set of pneumatic lines to two air data transducer assemblies (ADTAs). The two temperature sensors are installed on each probe and wired to an ADTA. The pressures and temperatures sensed by the left probe are connected by pneumatic tubing to ADTAs 1 and 3. Those sensed by the right probe are connected to ADTAs 2 and 4.

Within each ADTA, the pressure signals are directed to four transducers, and the temperature signal is directed to a bridge. The pressure transducer analogs are converted to digital data by digital-processor-controlled counters. The temperature signal is converted by an analog-to-digital converter. The digital processor corrects errors, linearizes the pressure data, and converts the temperature bridge data to temperatures in degrees Centigrade. These data are sent to the digital output device and then to the onboard computers to update the navigation state vector. The data are also sent to the CRTs and to the commander's and pilot's altitude/vertical velocity indicators, and alpha/Mach indicators.

The ADTA SOP uses ADTA data to compute angle of attack, Mach number (M), equivalent airspeed (EAS), true airspeed (TAS), dynamic pressure (q-bar), barometric altitude (h), and altitude rate (h-dot).

The GPCs compare the pressure readings from the four ADTAs. If all the pressure readings compare within a specified value, one set of pressure readings from each probe is averaged and sent to the software. If one or more pressure signals of a set of probe pressure readings fail, the failed set's data flow is interrupted, and the software receives data from the other ADTA on that probe. If both probe

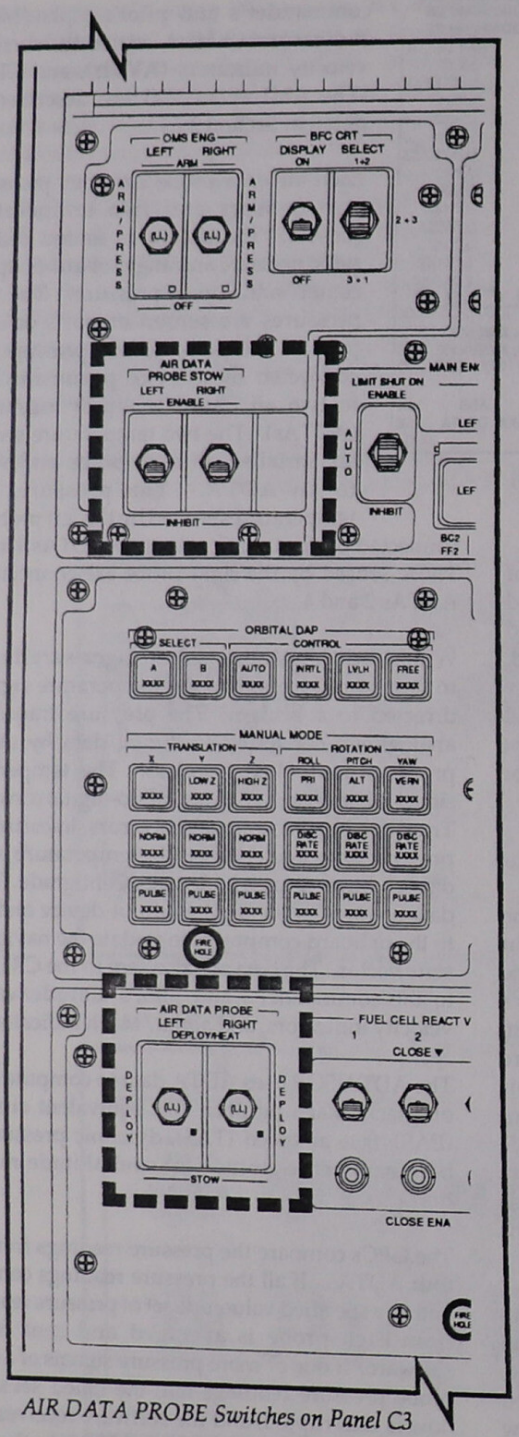

AIR DATA PROBE Switches on Panel C3

sets fail, the software operates on data from the two ADTAs connected to the other probe. The best total temperature from all four ADTAs is sent to the software.

Each probe is independently deployed by an actuator consisting of two ac motors connected to a rotary electromechanical actuator. Each probe is controlled by its *AIR DATA PROBE* switch on panel C3. To deploy the air data probes, the *LEFT* and *RIGHT* switches are positioned to *DEPLOY*. The redundant motors for each probe drive the probe to the deployed position. When the probe is fully deployed, limit switches remove electrical power from the motors. Deployment time is 15 seconds for two-motor operation and 30 seconds for single-motor operation. The *DEPLOY* position deploys the probe without electrical heaters; the *DEPLOY/HEAT* position deploys the air data probes with heaters powered.

The *AIR DATA PROBE STOW LEFT* and *RIGHT* switches on panel C3 are used to stow the probes. The stow procedure includes positioning the switches to *ENABLE* and positioning the corresponding *AIR DATA PROBE* switch to *STOW*. The *AIR DATA PROBE STOW INHIBIT* position opens the ac motor circuits, disables the stow, and protects the microswitches.

The fault detection system illuminates the red *AIR DATA* and *BACKUP C/W ALARM* lights on panel F7, and illuminates the *MASTER ALARM*. A fault also sounds the audible tone and generates a fault message on the CRT. A communication fault illuminates the *SM ALERT* light.

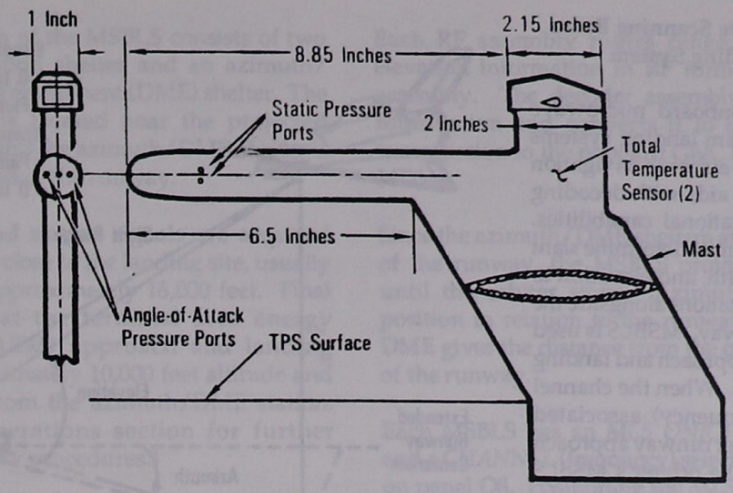

Mast Heater and Total Temperature Heater Not Shown

Air Data Probe

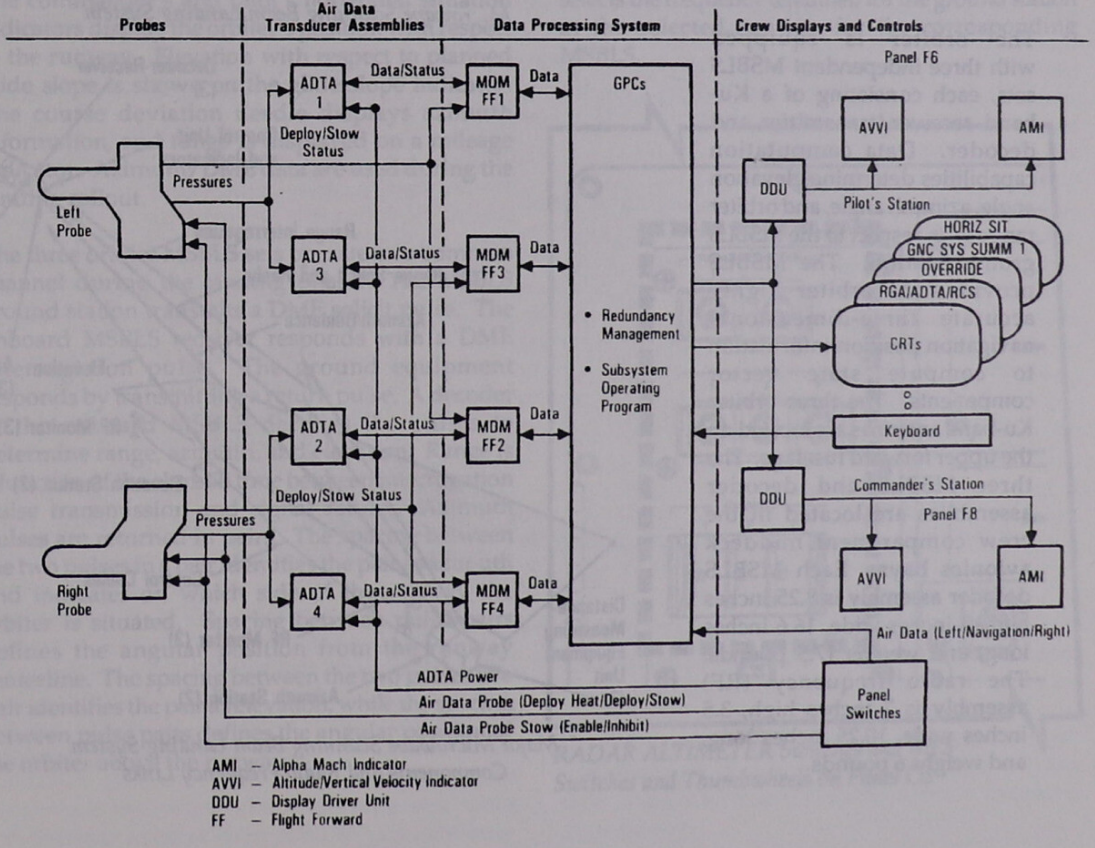

Air Data System Functional Block Diagram

Microwave Scanning Beam Landing System

The three onboard microwave scanning beam landing systems (MSBLS) are airborne navigation and landing aids with decoding and computational capabilities. The MSBLS units determine slant range, azimuth, and elevation to the ground stations alongside the landing runway. MSBLS is used during the approach and landing flight phases. When the channel (specific frequency) associated with the target runway approach is selected, the orbiter's MSBLS units receive elevation from the glide slope ground portion and azimuth and slant range from the azimuth/distance-measuring equipment ground station.

The orbiter is equipped with three independent MSBLS sets, each consisting of a Ku-band receiver/transmitter and decoder. Data computation capabilities determine elevation angle, azimuth angle, and orbiter range with respect to the MSBLS ground station. The MSBLS provides the orbiter highly accurate three-dimensional navigation position information to compute state vector components. The three orbiter Ku-band antennas are located on the upper forward fuselage. The three MSBLS and decoder assemblies are located in the crew compartment middeck avionics bays. Each MSBLS decoder assembly is 8.25 inches high, 5 inches wide, 16.6 inches long, and weighs 17.5 pounds. The radio frequency (RF) assembly is 7 inches high, 3.5 inches wide, 10.25 inches iong, and weighs 6 pounds.

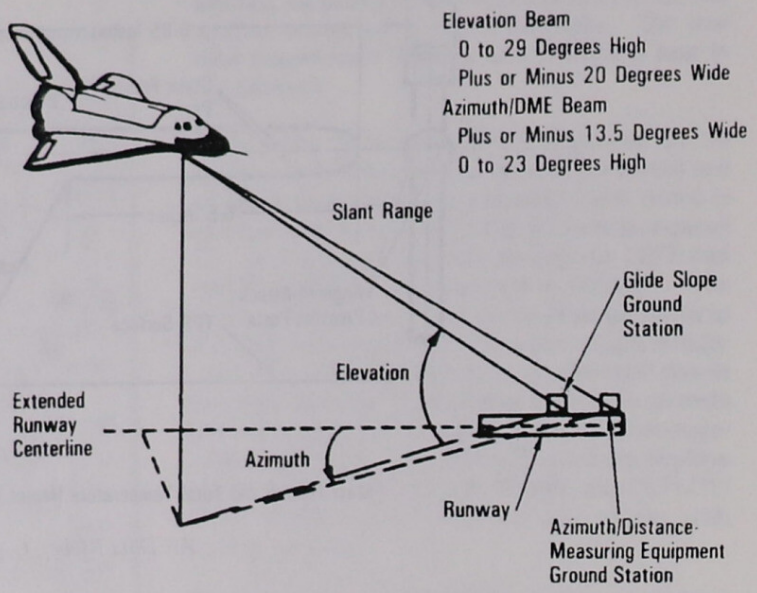

Microwave Scanning Beam Landing System

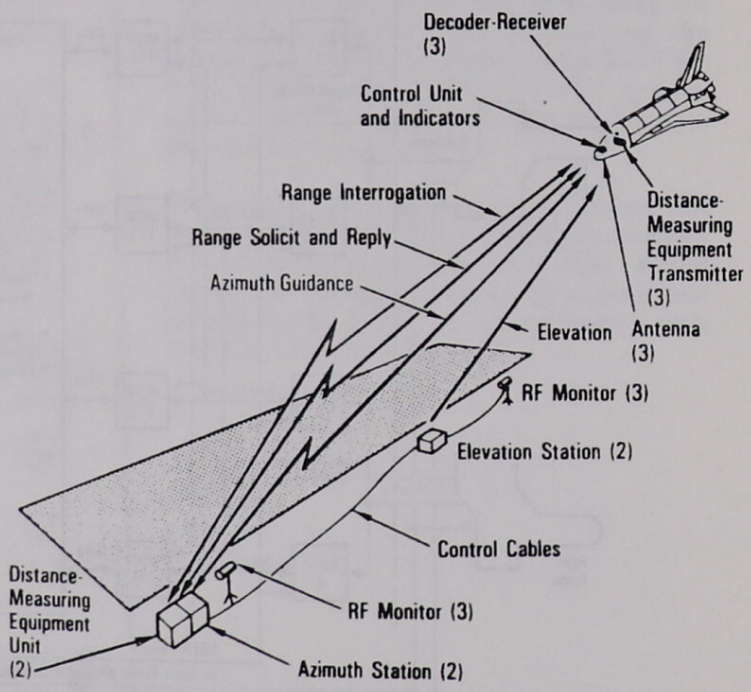

Major Microwave Scanning Beam Landing System Components and Radio Frequency Links

The ground portion of the MSBLS consists of two shelters: an elevation shelter and an azimuth/distance-measuring equipment (DME) shelter. The elevation shelter is located near the projected touchdown point, and the azimuth/DME shelter is located at the far end of the runway.

The MSBLS ground station signals are acquired when the orbiter is close to the landing site, usually at an altitude of approximately 18,000 feet. Final tracking occurs at the terminal area energy management (TAEM) approach and landing interface at approximately 10,000 feet altitude and 8 nautical miles from the azimuth/DME station. (Refer to the Operations section for further information on entry procedures.)

The MSBLS azimuth, elevation, and range data are used to compute steering commands from acquisition through landing and rollout.

The commander's and pilot's horizontal situation indicators display the orbiter's position with respect to the runway. Elevation with respect to planned glide slope is shown on the glide slope indicator. The course deviation needle displays azimuth information, and range is displayed on a mileage indicator. Azimuth/DME data are used during the landing rollout.

The three orbiter MSBLS sets operate on a common channel during the landing phase. The MSBLS ground station transmits a DME solicit pulse. The onboard MSBLS receiver responds with a DME interrogation pulse. The ground equipment responds by transmitting a return pulse. A decoder in the onboard MSBLS decodes the pulses to determine range, azimuth, and elevation. Range is a function of the elapsed time between interrogation pulse transmission and signal return. Azimuth pulses are returned in pairs. The spacing between the two pulses in a pair identifies the pair as azimuth and indicates on which side of the runway the orbiter is situated. Spacing between pulse pairs defines the angular position from the runway centerline. The spacing between the two pulses in a pair identifies the pair as elevation, while the spacing between pulse pairs defines the angular position of the orbiter above the runway.

Each RF assembly routes range, azimuth, and elevation information in RF form to its decoder assembly. The decoder assembly processes the information and converts it to digital data for transmission to the onboard GNC software via the MDMs.

Since the azimuth/DME shelters are at the far ends of the runway, the MSBLS provides useful data until the orbiter stops. Azimuth data provide position in relation to the runway centerline; the DME gives the distance from the orbiter to the end of the runway.

Each MSBLS has an *MLS ON/OFF* power switch and a *CHANNEL* (frequency) selection thumbwheel on panel O8. Positioning the *MLS* 1, 2, or 3 switch to *ON* provides power to the corresponding system. MSBLS 1 receives power from main bus A, MSBLS 2 from main bus B, and MSBLS 3 from main bus C. Positioning the *CHANNEL* 1, 2, and 3 thumbwheels selects the frequency (channel) for the ground station at the selected runway for the corresponding MSBLS.

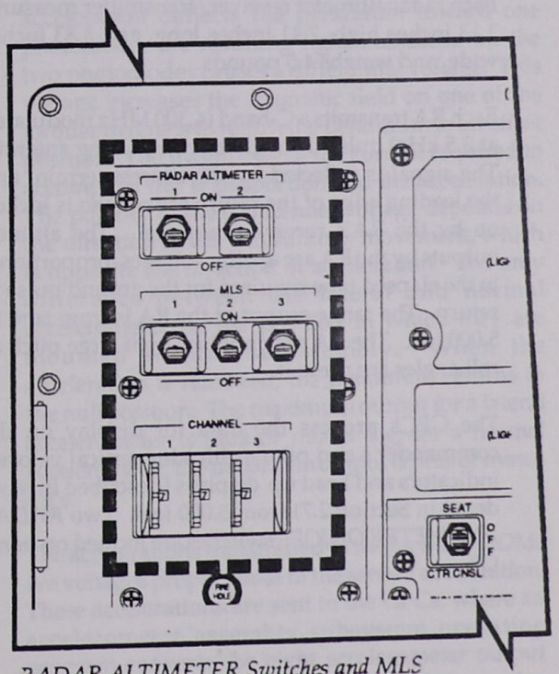

RADAR ALTIMETER Switches and MLS Switches and Thumbwheels on Panel O8

Redundancy management selects azimuth and elevation angles for processing navigation data. The three MSBLS sets are compared to identify any significant differences among them. When data from all three MSBLS sets are valid, redundancy management selects middle values from three ranges, azimuths, and elevations. In the event that only two MSBLS sets are valid, the two ranges, azimuths, and elevations are averaged. If only one MSBLS set is valid, its range, azimuth, and elevation are passed for display. During fault detection, the *SM ALERT* light is illuminated, and a CRT fault message is shown.

Radar Altimeters

The two radar altimeters (RAs) on board the orbiter measure absolute altitude from the orbiter to the nearest terrain within the beam width of the orbiter's antennas. The two independent RAs consist of a transmitter and receiver antenna. The systems can operate simultaneously without affecting each other. The four C-band antennas are located on the lower forward fuselage. The two receiver/transmitters are located in the middeck forward avionics bays. Each radar altimeter receiver/transmitter measures 3.13 inches high, 7.41 inches long, and 3.83 inches wide, and weighs 4.5 pounds.

Each RA transmits a C-band (4,300 MHz modulated at 8.5 kHz) pulse through its transmitting antenna. The signal is reflected by the nearest terrain, and the leading edge of the return radar echo is locked on by the RA's receiving antenna. The altitude outputs by the RA are analog voltages, proportional to the elapsed time required for the ground pulse to return. The range output of the RA is from zero to 5,000 feet. The RA may not lock on if large pitch or roll angles are present.

The GPCs process the data for display on the commander's and pilot's altitude/vertical velocity indicators and head up displays (described in more detail in Section 2.7) from 5,000 feet. Two *RADAR ALTIMETER ON/OFF* switches are located on panel O8.

Flight Control System Hardware

The flight control system (FCS) ascent and entry hardware provides manual guidance commands to GNC software and responds to effector commands from GNC software in order to effect vehicle and trajectory control.

The following hardware includes sensors responsible for flight control data:

- Accelerometer assembly (AA) — senses vehicle accelerations along two body axes.
- Rate gyro assembly (RGA) — senses vehicle rotation rates about three body axes.
- SRB rate gyro assembly (SRB RGA) — senses vehicle rotation rates about two body axes during first stage ascent before SRB separation.

The following hardware provides manual guidance commands:

- Rotational hand controller (RHC) — commands acceleration about a body axis.
- Translational hand controller (THC) — commands vehicle motion along a body axis.
- Rudder pedal transducer assembly (RPTA) — commands an acceleration about the yaw body axis in atmospheric flight.
- Speed brake/thrust controller (SBTC) — commands changes in vehicle aerodynamic drag or change in main engine throttle level (specific function is flight-phase dependent).
- Switches (body flap and trim) — command the flight control system or aerosurface trim.

The following hardware responds to software commands:

- Aerosurface servoamplifier (ASA) — responsible for aerosurface actuator positioning.
- Ascent thrust vector control (ATVC) — responsible for main engine and SRB actuator positioning.

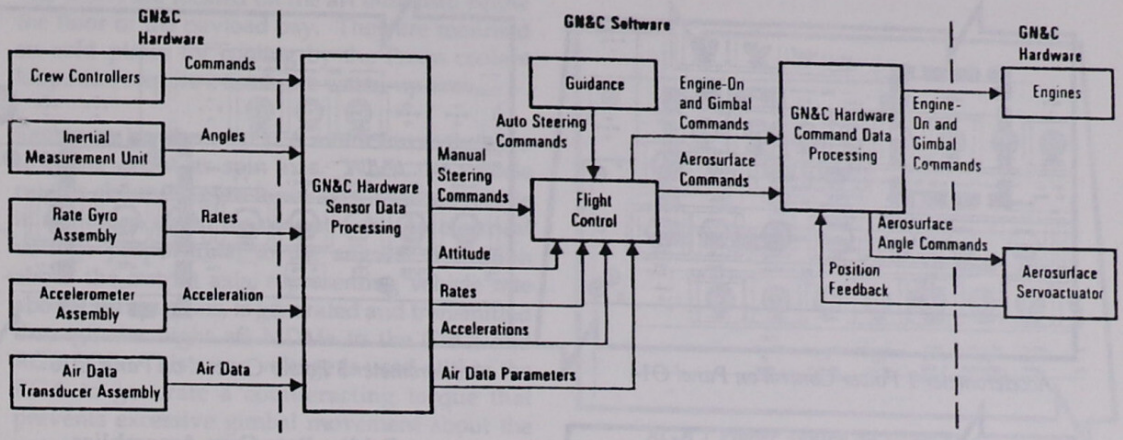

Flight Control Interfaces

Each piece of flight control system hardware is hard-wired to one of eight flight-critical MDMs connected to each of the five GPCs by data buses. Each GPC is assigned to command one or more data buses.

Accelerometer Assemblies

There are four accelerometer assemblies (AAs) aboard the orbiter, each containing two identical single-axis accelerometers. One senses vehicle acceleration along the lateral (left and right) vehicle Y axis; the other senses vehicle acceleration along the normal (vertical) Z axis. The four AAs are located in the crew compartment middeck forward avionics bays 1 and 2. The AAs are convection cooled and require a 5-minute warm-up period.

The AAs provide acceleration feedback to the FCS. These accelerations are used to augment stability during first-stage ascent, aborts, and entry, to relieve vehicle load during first-stage ascent, and to compute steering errors for display on the commander's and pilot's attitude director indicators.

The lateral acceleration readings enable the FCS to null side forces during both ascent and entry. The normal acceleration readings augment pitch control and indicate the need to relieve normal loads. During the latter stages of entry, the normal acceleration measurements provide feedback for guidance to control pitch. (In contrast, the accelerometers within the IMUs measure three accelerations used in navigation to calculate state vector changes.)

Each accelerometer consists of a pendulum suspended so that its base is in a permanent magnetic field between two torquer magnets. A light beam passes through an opening in one of the torquer magnets; photodiodes are located on both sides of the other torquer magnet. When acceleration deflects the pendulum toward one photodiode, the resulting light imbalance on the two photodiodes causes a differential voltage. This voltage increases the magnetic field on one of the torquer magnets to return the pendulum to an offset position. The magnitude of the current required to accomplish this is proportional to the acceleration. The polarity of the differential voltage depends on the direction of the pendulum's movement, which is opposite the direction of acceleration. The only difference between the lateral and normal accelerometers is the position in which they are mounted within the assembly. When the acceleration is removed, the pendulum returns to the null position. The maximum output for a lateral accelerometer is plus or minus 1 g; for a normal accelerometer, the maximum output is plus or minus 4 g's.

The accelerations transmitted to the forward MDMs are voltages proportional to the sensed acceleration. These accelerations are sent to the GPCs, where an accelerometer assembly subsystem operating program converts the eight accelerometer output voltages to gravitational units. These data are also sent to the CRTs and attitude director indicator during entry.

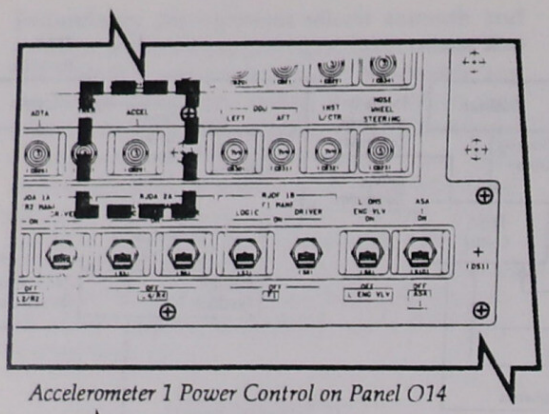

Accelerometer 1 Power Control on Panel O14

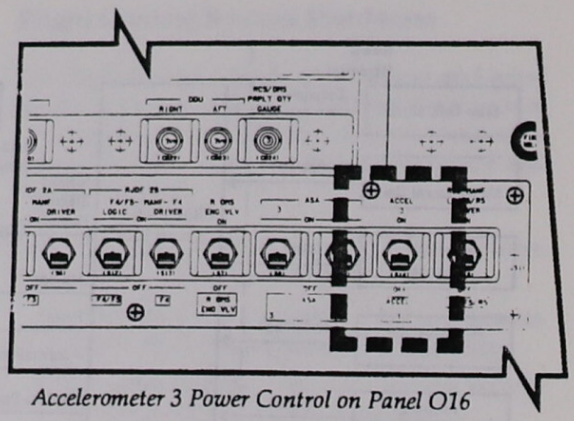

Accelerometer 3 Power Control on Panel O16

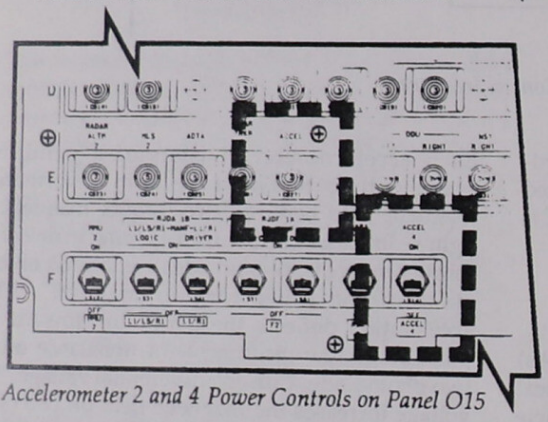

Accelerometer 2 and 4 Power Controls on Panel O15

The accelerometer assemblies provide fail-operational redundancy during both ascent and entry. The four assemblies employ an interchangeable mid-value software scheme to select the best data for redundancy management and failure detection.

Accelerometer 1 is powered from main bus A through the *ACCEL 1* circuit breaker on panel O14. Accelerometer 2 is powered from main bus B through the *ACCEL 2* circuit breaker on panel O15. Accelerometer 3 is powered through the *ACCEL 3 ON/OFF* switch on panel O16. Accelerometer 4 is controlled by the *ACCEL 4 ON/OFF* switch on panel O15. The accelerometers are turned off once on orbit and on again before entry. The *RGA/ACCEL* caution and warning light on panel F7 illuminates if an accelerometer fails.

Orbiter Rate Gyro Assemblies

The orbiter has four rate gyro assemblies (RGAs) referred to as RGAs 1, 2, 3, and 4. Each RGA contains three identical single-degree-of-freedom rate gyros so that each gyro senses rotation about one of the vehicle axes. Thus, each RGA includes one gyro sensing roll rate (about the X axis), one gyro sensing pitch rate (about the Y axis), and one gyro sensing yaw rate (about the Z axis). These rates are the primary feedback to the flight control system during ascent, entry, insertion, and deorbit. The flight control system must have good rate feedback in all three axes to maintain control.

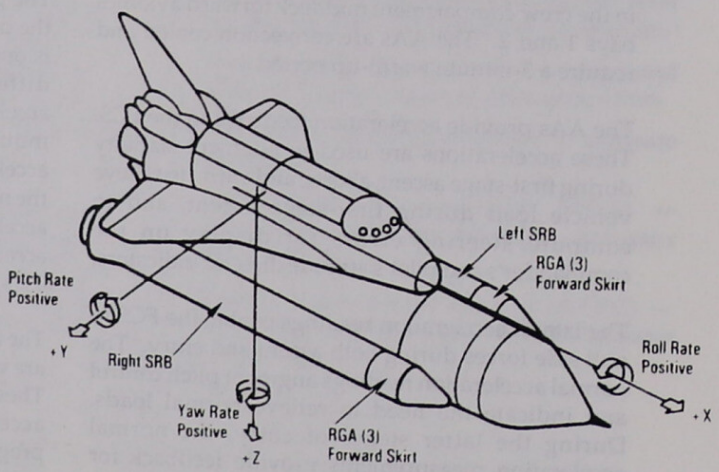

Rate Gyro Assembly Location and Rotation Axes

The RGAs are located on the aft bulkhead below the floor of the payload bay. They are mounted on cold plates for cooling by the Freon coolant loops and require a 5-minute warm-up time.

Each gyro has three axes. A motor forces the gyro to rotate about its spin axis. When the vehicle rotates about the gyro input axis, a torque results in a rotation about the output axis. An electrical voltage proportional to the angular deflection about the output axis, representing vehicle rate about the input axis, is generated and transmitted through the flight aft MDMs to the GPCs and RGA SOP. This same voltage is used within the RGA to generate a counteracting torque that prevents excessive gimbal movement about the output axis. The maximum output for roll rate gyros is plus or minus 40 degrees per second; for the pitch and yaw gyros, the maximum output is plus or minus 20 degrees per second.

The *RGA 1, 2, 3,* and *4* power switches are located on panels O14, O15, O16, and O15 respectively. The redundant power supplies for RGAs 1 and 4 prevent the loss of more than one rate gyro assembly if main bus power is lost. The RGAs are turned off on orbit, except during flight control system checkout, to conserve power. RGAs are reactivated during deorbit prep, and prior to any transition to OPS 3, when they are required for the transition DAP to control vehicle attitude.

WARNING

A transition to OPS 3 with RGAs off can result in loss of control.

The RGAs afford fail-operational redundancy during both ascent and entry. An interchangeable mid-value software scheme selects the best data for use in redundancy management and failure detection. The *RGA/ACCEL* caution and warning light on panel F7 illuminates to inform the flight crew of an RGA failure.

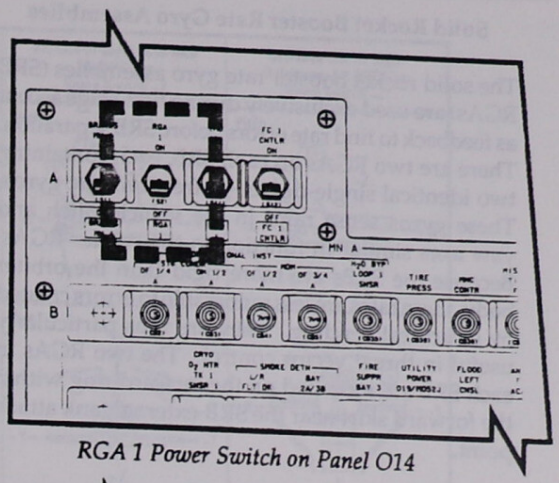

RGA 1 Power Switch on Panel O14

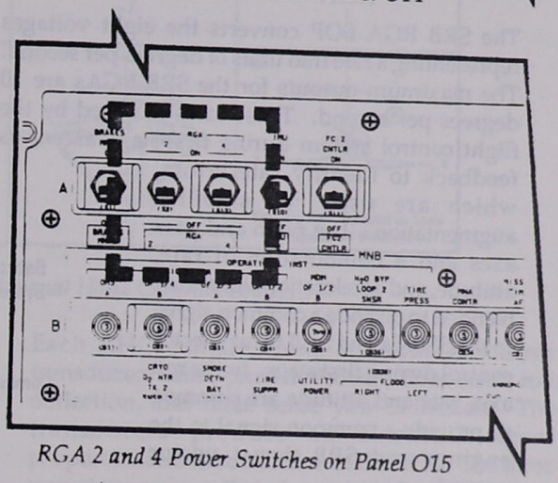

RGA 2 and 4 Power Switches on Panel O15

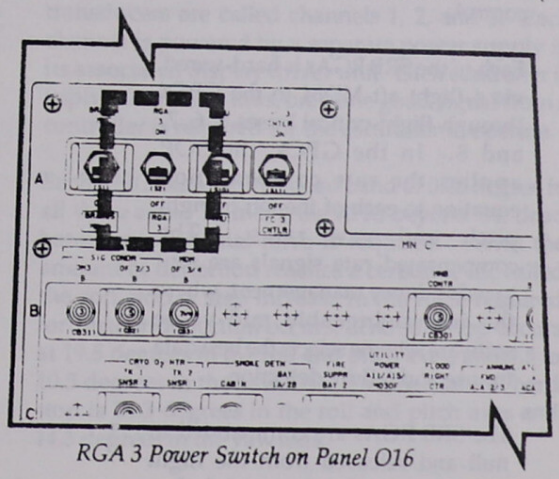

RGA 3 Power Switch on Panel O16

Solid Rocket Booster Rate Gyro Assemblies

The solid rocket booster rate gyro assemblies (SRB RGAs) are used exclusively during first-stage ascent as feedback to find rate errors before SRB separation. There are two RGAs on each SRB, each containing two identical single-degree-of-freedom rate gyros. These gyros sense rates in the vehicle pitch and yaw axes similar in function to the orbiter RGAs. Because the SRBs are more rigid than the orbiter body, these rates are less vulnerable to errors created by structural bending. They are thus particularly useful in thrust vector control. The two RGAs in each SRB are mounted on the forward ring within the forward skirt near the SRB-external tank attach point.

The SRB RGA SOP converts the eight voltages representing a rate into units of degrees per second. The maximum outputs for the SRB RGAs are 10 degrees per second. These rates are used by the flight control system during first-stage ascent as feedback to identify rate errors, which are used for stability augmentation. The pitch and yaw axes and a combination of rate, attitude, and acceleration signals are blended to provide a common signal to the SSMEs and SRB thrust vector control during first stage. In the roll axis, rate and attitude are summed to provide a common signal to the engines and SRB thrust vector control.

Each of the SRB RGAs is hard-wired via a flight aft MDM to the GPCs through flight-critical buses 5, 6, 7, and 8. In the GPCs, the SOP applies the rate compensation equation to each of the left or right pitch and yaw rates. The compensated rate signals are sent to redundancy management, where the interchangeable mid-value software scheme selects the best data for use and failure detection.

The SRB RGAs are commanded to null and released from the flight control system 2 to 3 seconds before SRB separation; SRB yaw and pitch rate data are then replaced with orbiter RGA pitch and yaw data.

The *RGA/ACCEL* caution and warning light on panel F7 illuminates to inform the flight crew of an SRB RGA failure.

Rotational Hand Controller

There are three rotational hand controllers (RHCs) on the orbiter flight deck: one at the commander's station, one at the pilot's station, and one at the aft flight deck station. Each RHC controls vehicle rotation about the roll, pitch, and yaw axes. During ascent, the commander's and pilot's RHCs may be used to gimbal the SSMEs and SRBs. For insertion and deorbit, the commander's and pilot's RHCs may be used to gimbal the OMS engines or to command the RCS jets.

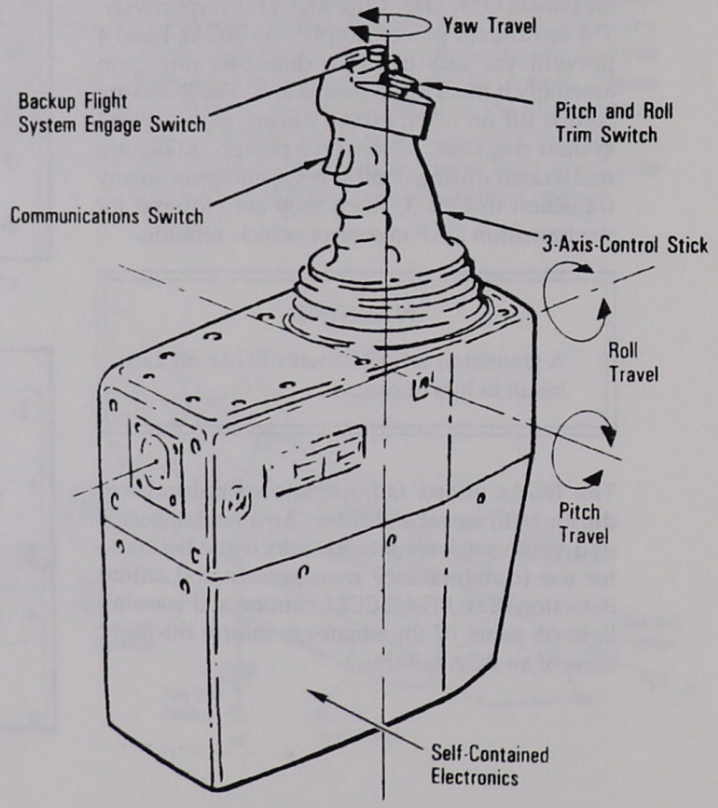

Rotational Hand Controller

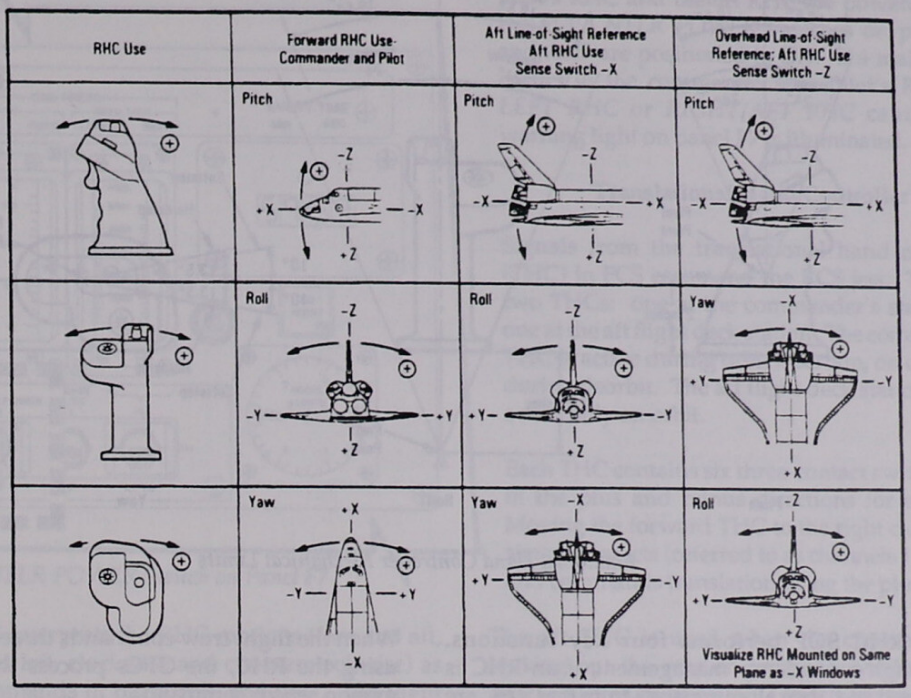

Positive Deflections of the Rotational Hand Controller by Axis

On orbit, the commander's, pilot's, and aft flight station RHCs may be used to gimbal the OMS engines and command RCS jets. In addition, the commander's and pilot's RHCs may be used to command RCS jets during the early portion of entry, as well as to command the orbiter aerosurfaces during the latter portion of entry. The aft flight station RHC is used only on orbit.

Human factors dictate that an RHC deflection produce a rotation in the same direction as the flight crewmember's line of sight. A *SENSE* switch on panel A6U selects the line-of-sight reference, either –Z or –X.

Several switches are located on the RHC. Depressing the backup flight system (BFS) mode button on the commander's and pilot's RHCs engages the BFS. The commander's, pilot's, and aft flight station RHCs have a two-contact trim switch. This switch, pushed forward or aft, adds a trim rate to the RHC pitch command, or a roll trim rate when pushed left or right. The aft RHC's trim switch is inactive. The communications switch on each RHC is a push-to-talk switch that enables voice transmission.

Each RHC contains nine transducers: three transducers sense pitch deflection, three sense roll deflection, and three sense yaw deflection. The transducers produce an electrical signal proportional to the deflection of the RHC. The three transducers are called channels 1, 2, and 3. Each channel is powered by a separate power supply in its associated display driver unit. Each controller is triply redundant; thus, only one good signal from a controller is required for the controller to operate.

Each RHC has an initial dead band of 0.25 degree in all three axes. To move the RHC beyond the dead band, an additional force is required. When the amount of deflection reaches a certain level, called the soft stop, a step increase in the force required for further deflection occurs. The soft stop occurs at 19.5 degrees in the roll and pitch axes, and 9.5 to 10.5 degrees in the yaw axis. The mechanical hard stop is 24.3 degrees in the roll and pitch axes and 14.3 degrees in the yaw axis.

Inputs from the RHCs to the FCS pass through a redundancy management scheme and the RHC SOP before they are passed to the aerojet digital autopilot.

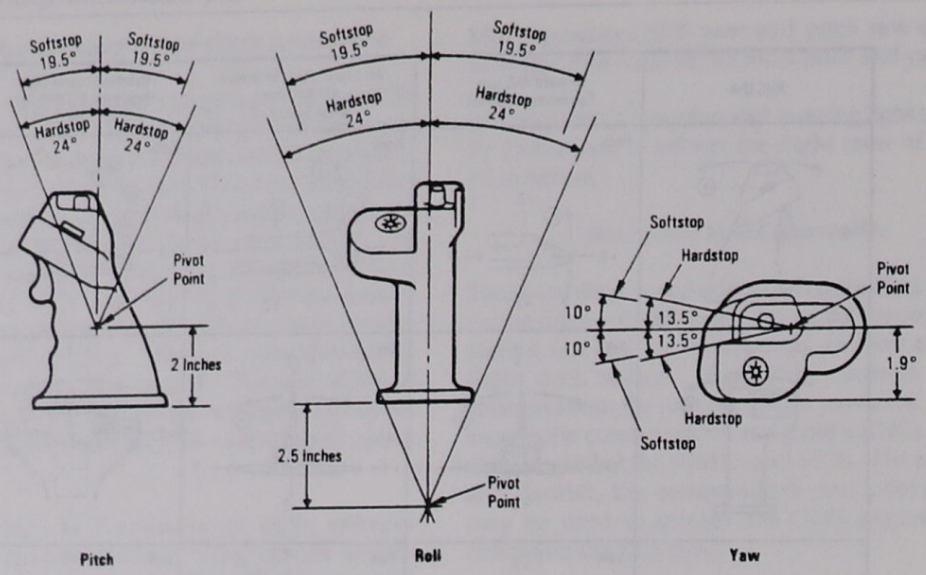

Rotational Hand Controller Mechanical Limits

The RHC SOP performs four key functions. Through redundancy management, if an RHC is deemed bad, then all commands from that RHC are set to zero. The software is also responsible for compensating and biasing the RHC commands, with the aft RHC commands transformed according to the *SENSE* switch position. The compensated and transformed commands are summed, by axis, to produce rotation commands for the flight control software. Finally, the SOP sets discretes to indicate if an RHC deflection is outside the software detent or beyond the software softstop.

In a nominal mission, the flight crew can make manual inputs using the RHC during every major mode except terminal countdown. During all phases except ascent, when an RHC deflection exceeds the detent in an axis, the RHC SOP generates a discrete signal that converts the RHC from the automatic mode to control stick steering (CSS), or hot stick. During ascent, a *CSS PITCH* and/or *ROLL/YAW* push button indicator on panel F2 or F4 must be depressed for manual inputs to be implemented into the flight control system from the commander's or pilot's RHC. The *CSS* light for the push button indicator illuminates, and control is downmoded from automatic to CSS.

When the flight crew commands three-axis motion using the RHC, the GPCs process the RHC and motion sensor commands.

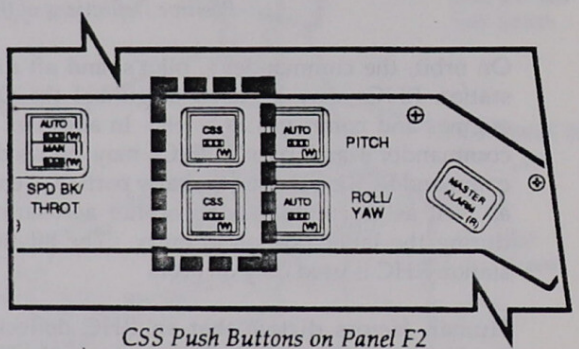

CSS Push Buttons on Panel F2

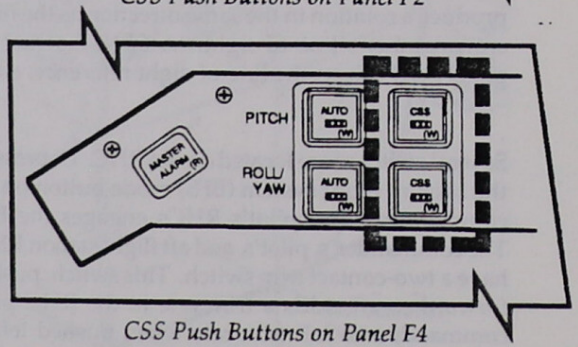

CSS Push Buttons on Panel F4

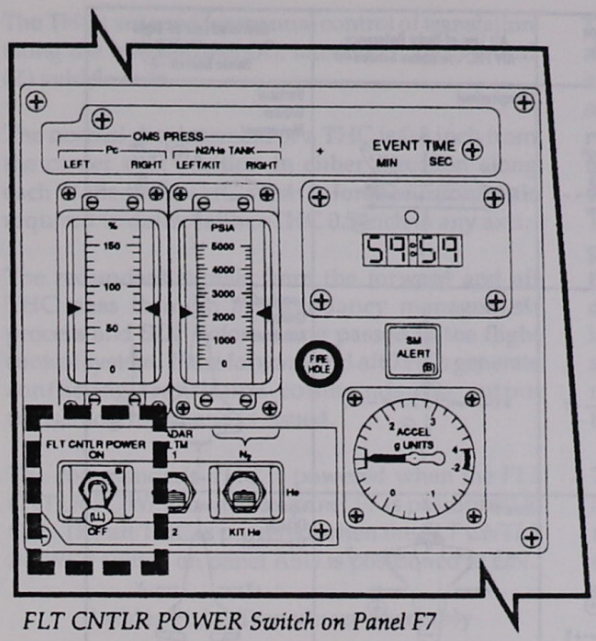

FLT CNTLR POWER Switch on Panel F7

The FCS interprets the RHC motions (fore and aft, right and left, clockwise and counterclockwise) as rate commands in pitch, roll, and yaw. The flight control equations are subsequently processed to provide control response and stability. If conflicting commands are given, no commands result.

During orbital flight, any one of the three stations can input three-axis control commands to the flight control system. During entry and landing, the commander and pilot have two-axis (bank and pitch only) capability. Aerosurface deflection trim, in all three axes, is controlled by the panel trim switches, while bank and pitch vehicle rate trim is controlled with the trim switches on the RHC. For a return-to-launch-site abort, both the commander's and pilot's RHC have three-axis capability during powered flight and two-axis capability during gliding flight.

The commander's RHC is powered when the *FLT CNTLR POWER* switch on panel F7 is positioned to *ON*. Similarly, the pilot's RHC and the aft RHC are powered when the *FLT CNTLR POWER* switches on panels F8 and A6U are positioned to *ON*. If a malfunction occurs in the commander's or pilot's RHC, the *LEFT RHC* or *RIGHT/AFT FHC* caution and warning light on panel F7 is illuminated.

Translational Hand Controller

Signals from the translational hand controller (THC) in FCS command the RCS jets. There are two THCs: one at the commander's station and one at the aft flight deck station. The commander's THC is active during orbit insertion, on orbit, and during deorbit. The aft flight deck station THC is active only on orbit.

Each THC contains six three-contact switches, one in the plus and minus directions for each axis. Moving the forward THC to the right closes three switch contacts (referred to as channels 1, 2, and 3) and commands translation along the plus Y axis.

The aft THC is used when the crewmember is looking out the rear or overhead windows. The *SENSE* switch on panel A6U selects the line-of-sight reference along the –X or –Z axis of the orbiter for the aft THC. The *SENSE* switch must be in the -X position for aft windows and -Z for the overhead windows in order for the aft THC commands to be correctly transformed to give the desired orbiter movement.

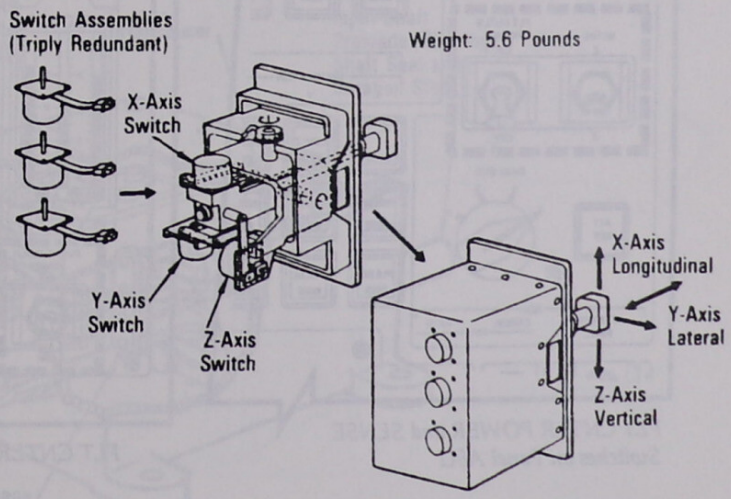

Translational Hand Controller

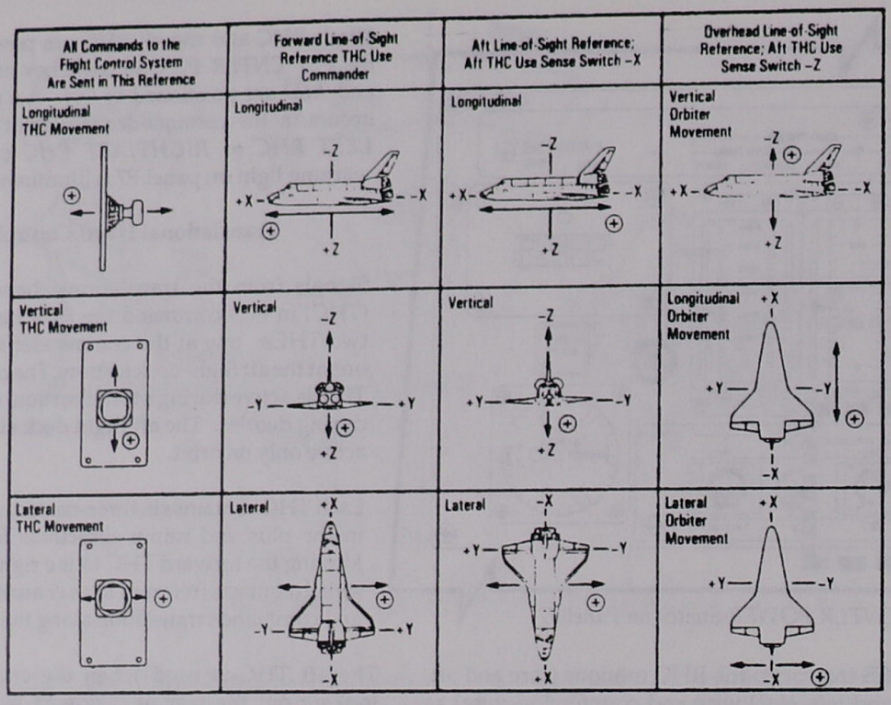

Positive Deflections of the Translational Hand Controller

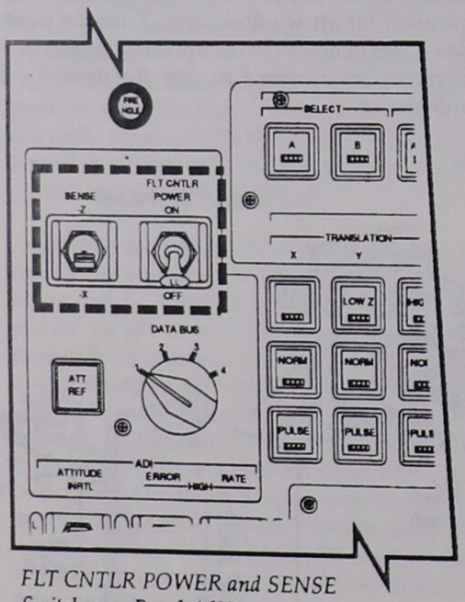

FLT CNTLR POWER and SENSE Switches on Panel A6U

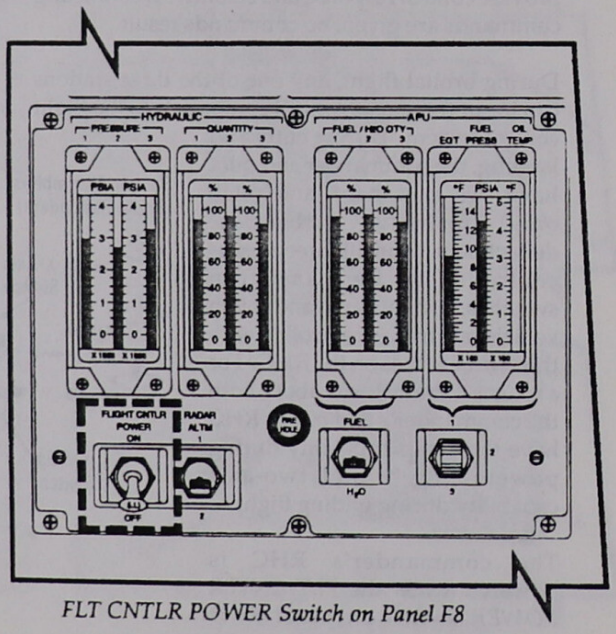

FLT CNTLR POWER Switch on Panel F8

The THCs are used for manual control of translation along the longitudinal (X), lateral (Y), and vertical (Z) vehicle axes.

The normal displacement of a THC is 0.5 inch from the center null position in either direction along each of the three THC axes. A force of 2 pounds is required to deflect either THC 0.5 inch in any axis.

The redundant signals from the forward and aft THC pass through a redundancy management process and SOP before being passed to the flight control system. If the forward and aft THCs generate conflicting translation commands, no output translation command is issued.

The commander's THC is powered when the *FLT CNTLR POWER* switch on panel F7 is positioned to *ON*. The aft THC is powered when the *FLT CNTLR POWER* switch on panel A6U is positioned to *ON*.

Rudder Pedal Transducer Assembly

There are two pairs of rudder pedals: one pair each for the commander and pilot. The commander's and pilot's rudder pedals are mechanically linked so that movement on one side moves the other side. When depressed, the pedal moves a mechanical input arm in a rudder pedal transducer assembly (RPTA). The RPTA contains three transducers (channels 1, 2, and 3), each generating an electrical signal proportional to the rudder pedal deflection.

The rudder pedals command orbiter acceleration about the yaw axis by positioning the rudder during atmospheric flight. Because the flight control software performs automatic turn coordination, the rudder pedals are not used until after touchdown for nose wheel steering.

The RPTA SOP maintains many functions in processing the RPTA data. The RPTA SOP converts the selected left and right commands from volts to degrees and selects the larger absolute value of the left and right commands for output to flight control software after applying a dead band. If redundancy management declares an RPTA bad, the SOP sets that RPTA output to 0.

The rudder pedals provide two additional functions after touchdown. Rudder pedal deflections provide nose wheel steering; depressing the upper portion of the pedals provides braking. Differential braking may also be used for directional control.

The rudder pedals can be adjusted 3.25 inches forward or aft from the neutral position in 0.81 inch increments (nine positions). A pedal force of 70 pounds is required to depress a pedal to its maximum forward or aft position.

The commander's RPTA is powered when the *FLT CNTLR POWER* switch on panel F7 is positioned to *ON*. The pilot's RPTA is powered when the *FLT CNTLR POWER* switch on panel F8 is positioned to *ON*.

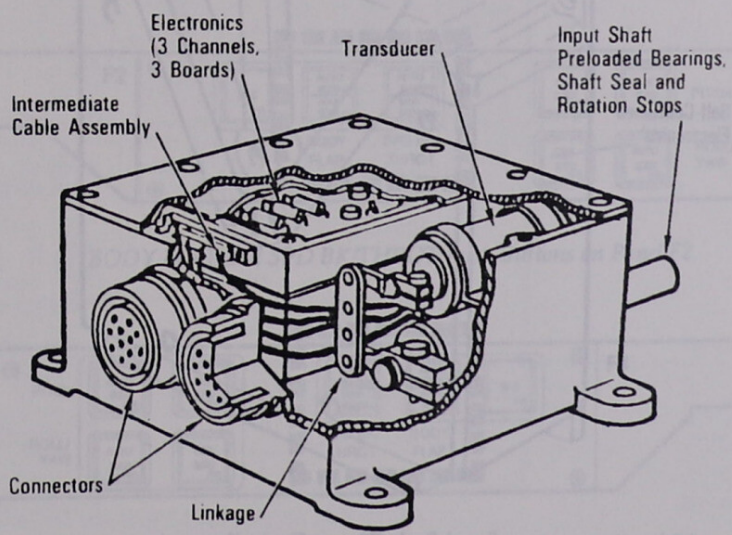

Rudder Pedal Transducer Assembly

Speed Brake/Thrust Controller

There are two speed brake/thrust controllers (SBTCs): one on the commander's side of the flight deck forward on panel L2 and one on the pilot's side of the center console on panel C3. The SBTCs serve two distinct functions. During ascent, the pilot's SBTC may be used to throttle the engines. During entry, the commander's or pilot's SBTC may be used to control aerodynamic drag (hence airspeed) by opening or closing the speed brake.

Depressing a *TAKEOVER* switch (with three contacts) on either SBTC changes to manual control of the SSME thrust-level setting (ascent) or speed brake position (entry). At the forward setting, the SSME thrust level is the greatest, or the speed brake is closed. Rotating the SBTC back decreases the SSME thrust level or opens the speed brake. Each SBTC contains three transducers (channels 1, 2, and 3) that produce a voltage proportional to the deflection. Redundancy management selects the output.

In the case of the engine thrust-level setting, the top half (*AUTO*) of both *SPD BK/THROT* push button indicators on panels F2 and F4 are illuminated nominally. Only the pilot's SBTC can be enabled for manual throttle control. The pilot depresses the *TAKEOVER* push button on the SBTC, causing the GPC throttle command to be frozen at its current value. While depressing the *TAKEOVER* button, the pilot moves the SBTC to match the frozen GPC command. Manual control is established when the match is within 4 percent. When the match is achieved, the *SPD BK/THROT MAN* push button indicator on panel F4 is illuminated, and the *AUTO* light is extinguished.

The *TAKEOVER* push button is then released. If the *TAKEOVER* push button is released before a match is achieved, the system reverts to GPC auto commands. Under manual throttle command, depressing either or both push button indicators on panel F2 and F4 causes the system to revert to the

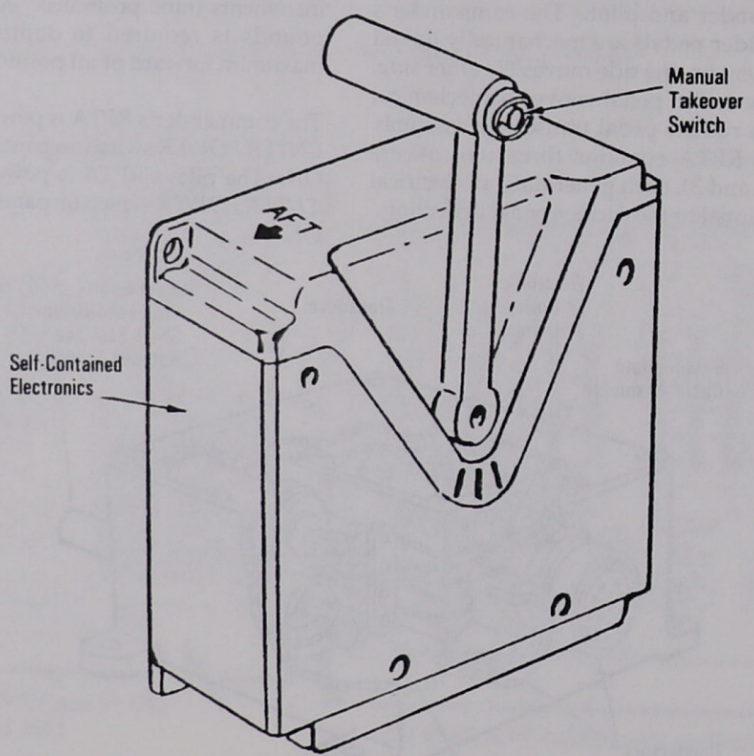

Speed Brake/Thrust Controller

GPC auto commands. Transferring back to auto leaves the throttle at the last-commanded manual setting until a new command is issued.

If the speed brake mode is in automatic, and the commander or pilot wishes to control the speed brake manually, momentarily depressing the *TAKEOVER* push button takes manual control of the speed brake. The speed brake is driven to the position currently commanded by the SBTC. To place the speed brake under software control, either or both *SPD BK/THROT* push button indicators on panel F2 and F4 can be depressed, thus illuminating the *AUTO* lights.

The SBTC SOP converts the selected SSME throttle command to a setting in percent and the selected speed brake command from volts to degrees. In addition, the SBTC SOP selects the speed brake command from the SBTC whose *TAKEOVER* button was depressed last. If both *TAKEOVER* buttons are depressed simultaneously, the commander's SBTC is given control. If redundancy management declares an SBTC bad, the command is frozen.

The commander's SBTC is powered by the *FLT CNTLR POWER* switch on panel F7 when positioned to *ON*. The pilot's SBTC is powered by the *FLT CNTLR POWER* switch on panel F8.

Body Flap Switches

There are two *BODY FLAP* switches, one on panel L2 for the commander and one on panel C3 for the pilot. Each switch is lever-locked and spring-loaded to the *AUTO/OFF* position. The *UP* and *DOWN* positions of each switch have two power supplies from separate control buses. In addition, each contact status is sent to the data processing system via an MDM. If the commander and pilot switches generate conflicting commands, a body-flap-up command is sent to flight control since the *UP* position has priority. The switches provide manual control for positioning the body flap for main engine thermal protection and for changing elevon deflections during the entry phase.

The body flap can be switched from its automatic mode to its manual mode by depressing the *BODY FLAP* push button on panel F2 or F4. The white *BODY FLAP MAN* push button indicator on panel F2 or F4 will illuminate, indicating manual control of the body flap. To regain automatic control, the *BODY FLAP* push button indicator on panel F2 or F4 is again depressed, extinguishing the *MAN* light and illuminating the *AUTO* light. The push button indicator is triply redundant.

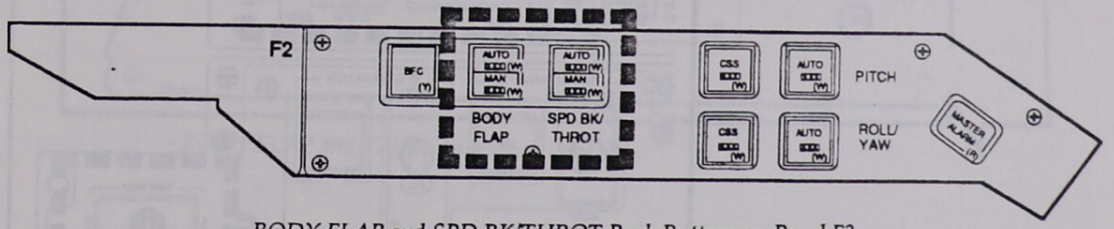

BODY FLAP and SPD BK/THROT Push Buttons on Panel F2

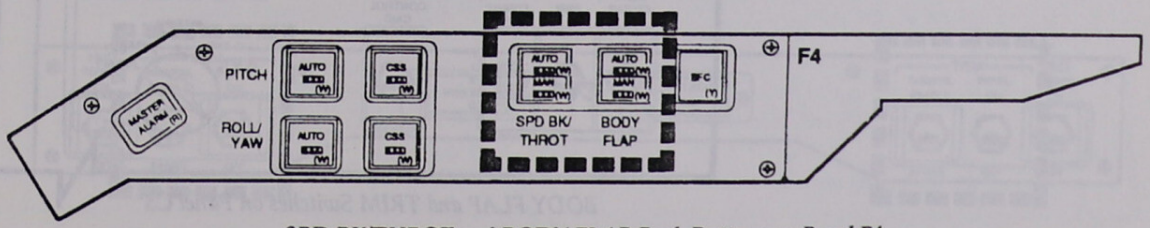

SPD BK/THROT and BODY FLAP Push Buttons on Panel F4

Trim Switches

Roll and pitch panel trim switches allow the crew to actually move the aerosurfaces, whereas the RHC trim switches change the rate command. The yaw panel trim switch inputs an acceleration bias into the yaw channel.

The *TRIM PANEL* switches on panel F3 enable control bus power to a set of three panel trim switches. The dual-redundant *TRIM RHC/PANEL* switches on panel F3 provide signals to the GPCs, prohibiting software execution of the associated RHC and panel trim switch inputs while in the *INHIBIT* position. The *ENABLE* position permits the RHC and *TRIM PANEL* switch to be used for trimming.

Six panel switches control roll, pitch, and yaw. The switches, labeled *ROLL TRIM*, *PITCH TRIM*, and *YAW TRIM*, are located on panel L2 for the commander and panel C3 for the pilot. The commander's trim switches on panel L2 are activated when the *TRIM PANEL* switch on the left side of panel F3 is positioned to *ON*. The pilot's trim switches on panel C3 are activated when the *TRIM PANEL* switch on the right side of panel F3 is positioned to *ON*. The corresponding *TRIM RHC/PANEL* switch must be in *ENABLE* in order for trimming to take place. All the trim switches on the RHC and on panels L2 and C3 are spring loaded to the *OFF* position.

Redundancy management processes the two sets of *TRIM* switches. If two switches generate opposing commands, the resultant trim command in that axis is zero.

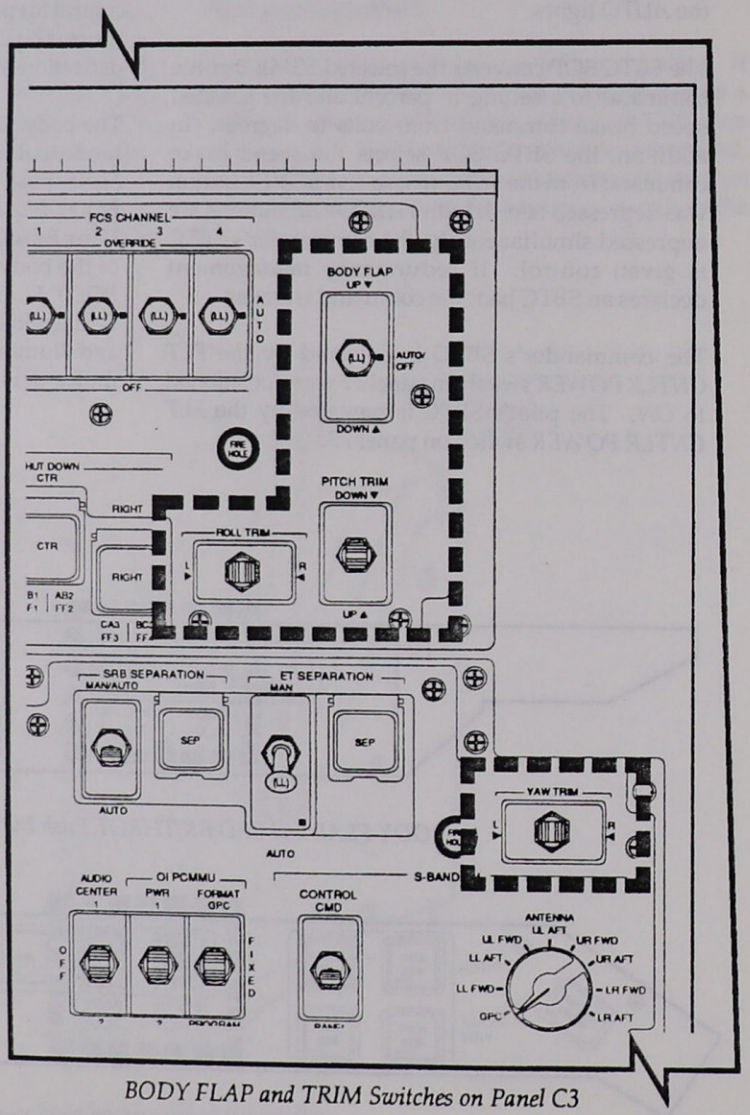

BODY FLAP and TRIM Switches on Panel C3

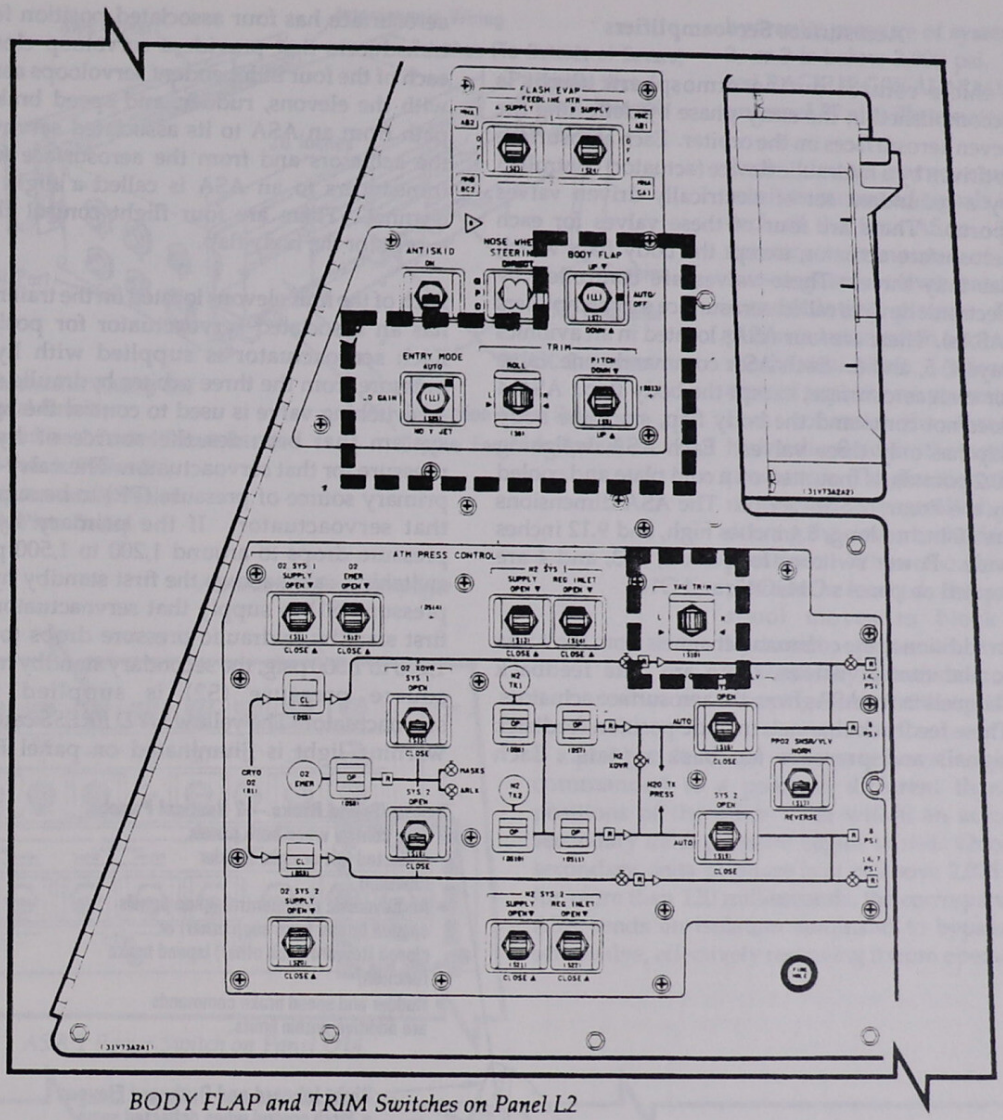

BODY FLAP and TRIM Switches on Panel L2

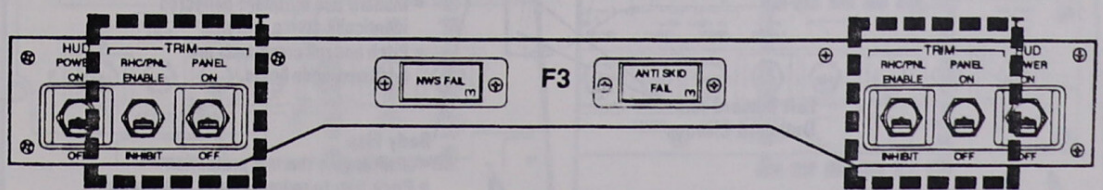

TRIM Switches on Panel F3

Aerosurface Servoamplifiers

Vehicle control during atmospheric flight is accomplished in the entry phase by deflecting the seven aerosurfaces on the orbiter. Each aerosurface is driven by a hydraulic device (actuator) controlled by a redundant set of electrically driven valves (ports). There are four of these valves for each aerosurface actuator, except the body flap, which has only three. These valves are controlled by electronic devices called aerosurface servoamplifiers (ASAs). There are four ASAs located in aft avionics bays 4, 5, and 6. Each ASA commands one valve for each aerosurface, except the body flap. ASA 4 does not command the body flap, since the body flap has only three valves. Each ASA, weighing 30.2 pounds, is mounted on a cold plate and cooled by the Freon coolant loops. The ASA dimensions are 20 inches long, 6.4 inches high, and 9.12 inches wide. Power switches for ASA 1, 2, 3, and 4 are located on panel s O14, O15, and O16.

In addition to the command channels from the ASAs to the control valves, there are data feedback channels to the ASAs from the aerosurface actuators. These feedback channels include position feedback signals and pressure feedback signals. Each aerosurface has four associated position feedback transducers that provide a servoloop closure for each of the four independent servoloops associated with the elevons, rudder, and speed brake. The path from an ASA to its associated servovalve in the actuators and from the aerosurface feedback transducers to an ASA is called a flight control channel. There are four flight control channels, except for the body flap.

Each of the four elevons located on the trailing edges has an associated servoactuator for positioning. Each servoactuator is supplied with hydraulic pressure from the three orbiter hydraulic systems. A switching valve is used to control the hydraulic system that becomes the source of hydraulic pressure for that servoactuator. The valve allows a primary source of pressure (PR) to be supplied to that servoactuator. If the primary hydraulic pressure drops to around 1,200 to 1,500 psig, the switching valve allows the first standby hydraulic pressure (S1) to supply that servoactuator. If the first standby hydraulic pressure drops to around 1,200 to 1,500 psig, the secondary standby hydraulic source pressure (S2) is supplied to that servoactuator. The yellow *HYD PRESS* caution and warning light is illuminated on panel F7 if the

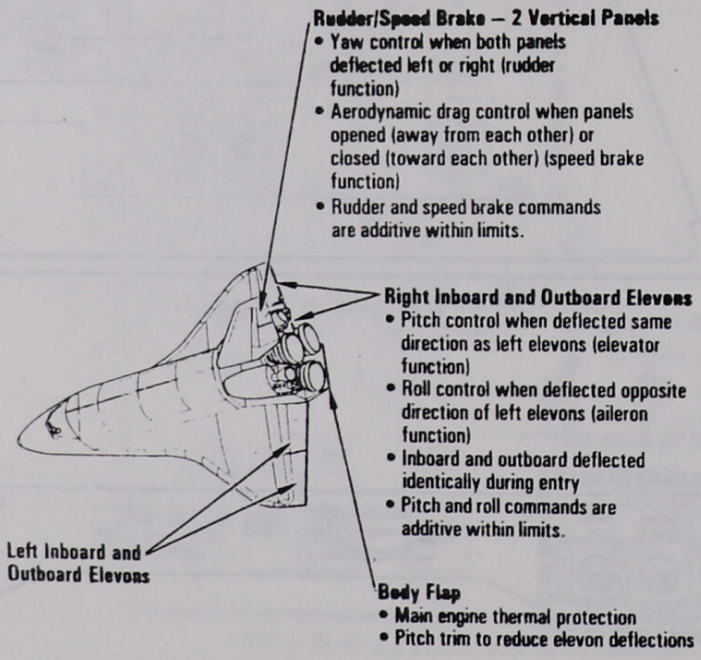

Aerodynamic Surfaces and Associated Control Axes

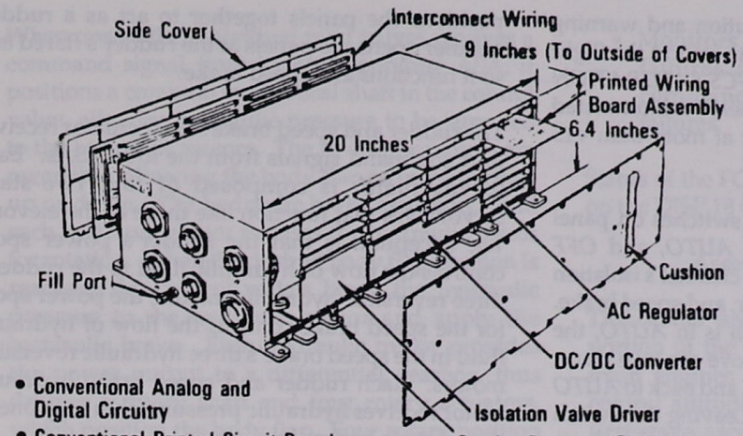

Aerosurface Servoamplifier

hydraulic pressure of system 1, 2, or 3 is below 2,800 psi. The red *BACKUP C/W ALARM* light on panel F7 also illuminates.

Each elevon servoactuator receives command signals from each of the four ASAs. Each actuator is composed of four two-stage servovalves that drive a modulating piston. Each piston is summed on a common mechanical shaft. A force is created to position a power spool that controls the flow of hydraulic fluid to the actuator power ram. The direction of ram movement is controlled, thus driving the elevon to the desired position. When the desired position is reached, the power spool moves to block the hydraulic pressure to the hydraulically operated ram, thus stopping the ram at that position.

If a problem develops within a servovalve, or it is commanded to a position different than the positions of the other three within an actuator, secondary delta pressure begins to rise. Once the secondary delta pressure is at or above 2,025 psia for more than 120 milliseconds, the corresponding ASA sends an isolation command to bypass the servovalve, effectively removing it from operation.

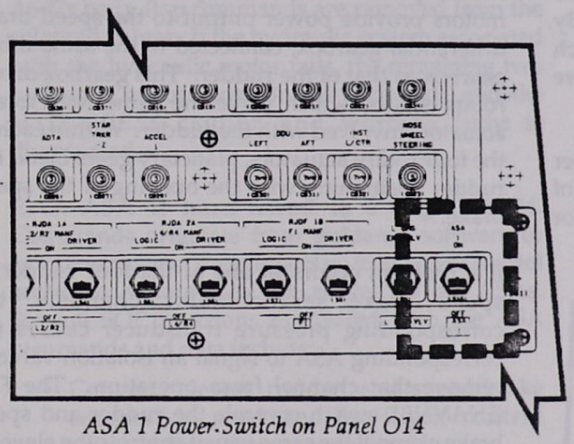

ASA 1 Power Switch on Panel O14

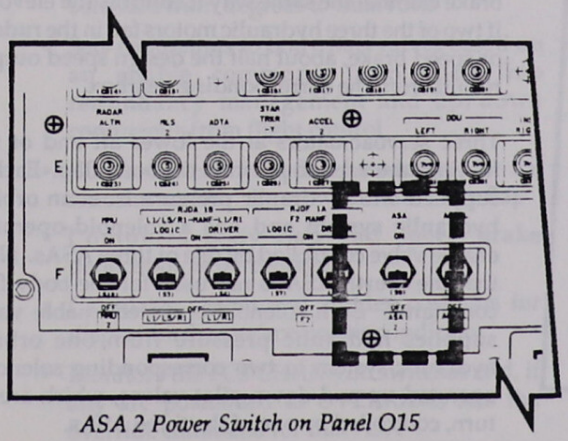

ASA 2 Power Switch on Panel O15

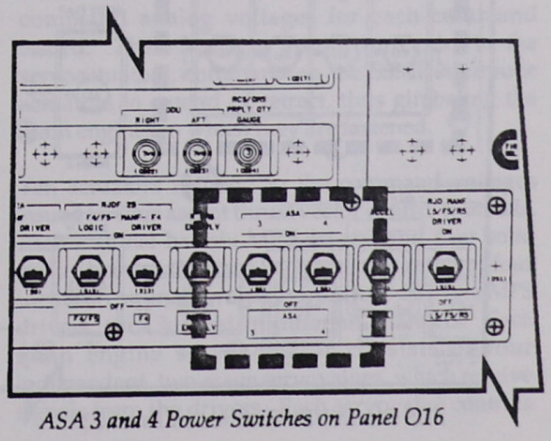

ASA 3 and 4 Power Switches on Panel O16

The *FCS CHANNEL* yellow caution and warning light on panel F7 is illuminated to inform the flight crew of a failed channel. A red *FCS SATURATION* caution and warning light on panel F7 is illuminated if one of the four elevons is set at more than +15 degrees or less than –20 degrees.

There are four *FCS CHANNEL* switches on panel C3. Each has an *OVERRIDE*, *AUTO*, and *OFF* position. The switch controls the channel's isolation capability for the elevons, rudder, and speed brake. When an *FCS CHANNEL* switch is in *AUTO*, the isolation capability discussed above can take place. Moving the switch to *OVERRIDE* and back to *AUTO* will reset an isolated channel. Leaving the switch in *OVERRIDE* will prevent the auto isolation from taking place. When the switch is positioned to *OFF*, that channel is bypassed.

During ascent, the elevons are deflected to reduce wing loads caused by rapid acceleration through the lower atmosphere. In this scheme, the inboard and outboard elevons are deflected separately. By the time the vehicle reaches approximately Mach 2.5, the elevons have reached a null position, where they remain.

The rudder/speed brake, which consists of upper and lower panels, is located on the trailing edge of the orbiter's vertical stabilizer. One servoactuator positions the panels together to act as a rudder; another opens the panels at the rudder's flared end so it functions as a speed brake.

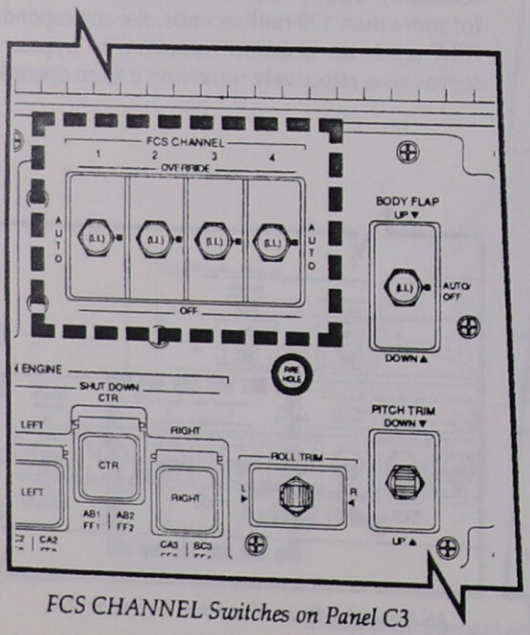

FCS CHANNEL Switches on Panel C3

The rudder and speed brake servoactuator receives four command signals from the four ASAs. Each servoactuator is composed of four two-stage servovalves that function like those of the elevons. The exception is that the rudder's power spool controls the flow of hydraulic fluid to the rudder's three reversible hydraulic motors; the power spool for the speed brake controls the flow of hydraulic fluid in the speed brake's three hydraulic reversible motors. Each rudder and speed brake hydraulic motor receives hydraulic pressure from only one of the orbiter's hydraulic systems.

The three hydraulic motors provide output to the rudder differential gearbox, connected to a mixer gearbox that drives rotary shafts. These rotary shafts drive four rotary actuators, which position the rudder panels. The three speed brake hydraulic motors provide power output to the speed brake differential gearbox, connected to the same mixer gearbox as that of the rudder. This gearbox drives rotary shafts, which drive the same four rotary actuators involved with the rudder. Within each of the four rotary actuators, planetary gears blend the rudder positioning with the opening of the speed brake.

If a problem occurs in one of the four rudder or speed brake servoactuator channels, the corresponding pressure transducer causes the corresponding ASA to signal an isolation valve to remove that channel from operation. The *FCS CHANNEL* switch controls the rudder and speed brake channel the same way it controls the elevons. If two of the three hydraulic motors fail in the rudder or speed brake, about half the design speed output results from the corresponding gearbox.

Three servoactuators at the lower aft end of the fuselage are used to position the body flap. Each is supplied with hydraulic pressure from an orbiter hydraulic system and has a solenoid-operated enable valve controlled by one of three ASAs. Note that the fourth ASA is not used for the body flap command. Each solenoid-operated enable valve supplies hydraulic pressure from one orbiter hydraulic system to two corresponding solenoid-operated up and down pilot valves, which are, in turn, controlled by one of the three ASAs.

When one of the individual pilot valves receives a command signal from its corresponding ASA, it positions a common mechanical shaft in the control valve, allowing hydraulic pressure to be supplied to the hydraulic motors. The hydraulic motors are reversible, allowing the body flap to be positioned up or down. The hydraulic brake associated with each hydraulic motor releases the hydraulic motor for rotation. When the desired body flap position is reached, the control valves block the hydraulic pressure to the hydraulic motor and apply the hydraulic brake. Each hydraulic motor provides the power output to a differential gearbox, thus driving a rotary shaft and four rotary actuators, which position the body flap. Four rotary position transducers measure the output of the differential gearbox to provide position feedback through all four ASAs to the flight control system software.

There is no channel isolation capability for the body flap. With the *FCS CHANNEL* switch in *OFF*, the ASA's body flap commands are removed from the solenoid valves. If the hydraulic system associated with the hydraulic motor fails, the remaining two hydraulic motors position the body flap, and the *HYD PRESS* caution and warning light is illuminated.

Each ASA is hard-wired to a flight MDM. Commands originate from guidance software or from controllers. These inputs go to the flight control software, where they are routed to the ASAs. Several SOP functions associated with the ASA commands and data include:

- Converts elevon, rudder, and speed brake commands produced by flight control software from degrees to millivolts
- Sets commands to body flap valves based on an enable command from body flap redundancy management and up/down commands from flight control
- Converts position feedback to degrees for the elevons, rudder, speed brake, and body flap
- Computes body flap and speed brake deflections as percentages
- Calculates elevon and rudder positions for display on the surface position indicator
- Monitors the *FCS CHANNEL* switches and, if any are positioned to *OVERRIDE*, sets the override command for that ASA
- Monitors hydraulic system pressures for failures and limits aileron and elevator commands according to the number of failures.

Status of the *FCS CHANNEL* switches is displayed on the DISP 18 GNC SYS SUMM 1 CRT (FCS CH).

Ascent Thrust Vector Control

The orbiter ascent thrust vector control (ATVC) portion of the FCS directs the thrust of the three main engines and two solid rocket boosters to control attitude and trajectory during lift-off and first-stage ascent, and the main engines during second-stage ascent.

ATVC is provided by avionics hardware packages that supply gimbal commands and fault detection for each hydraulic gimbal actuator. The packages are located in the three aft avionics bays in the orbiter aft fuselage and are cooled by cold plates and the Freon system. The associated flight aft MDMs are also located in the aft avionics bays.

The main propulsion system (MPS) thrust vector control command flow starts in the GPCs, in which the flight control system generates the position commands, and terminates at the SSME servoactuators, where the actuators gimbal the SSMEs in response to the commands. All the position commands are issued to the MPS thrust vector control command SOP. This program processes and transmits the commands to their corresponding flight aft MDMs. The commands are then separated and distributed to ascent thrust vector control channels, which generate equivalent command analog voltages for each command issued. These voltages are, in turn, sent to the servoactuators, commanding the SSME hydraulic actuators to extend or retract, thus gimbaling the main engines to which they are fastened.

Ten actuators respond to the command voltages issued by four ascent thrust vector control channels. Each channel has six MPS drivers and four solid rocket booster drivers. Each actuator receives four identical command voltages from four different MPS drivers, each located in different channels. Each main engine servoactuator consists of four independent, two-stage servovalves, which receive signals from the drivers. Each servovalve controls

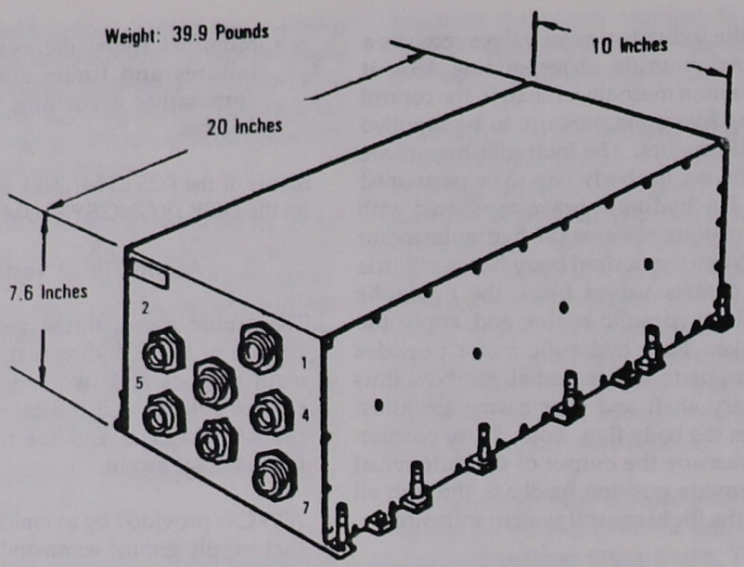

Ascent Thrust Vector Controller

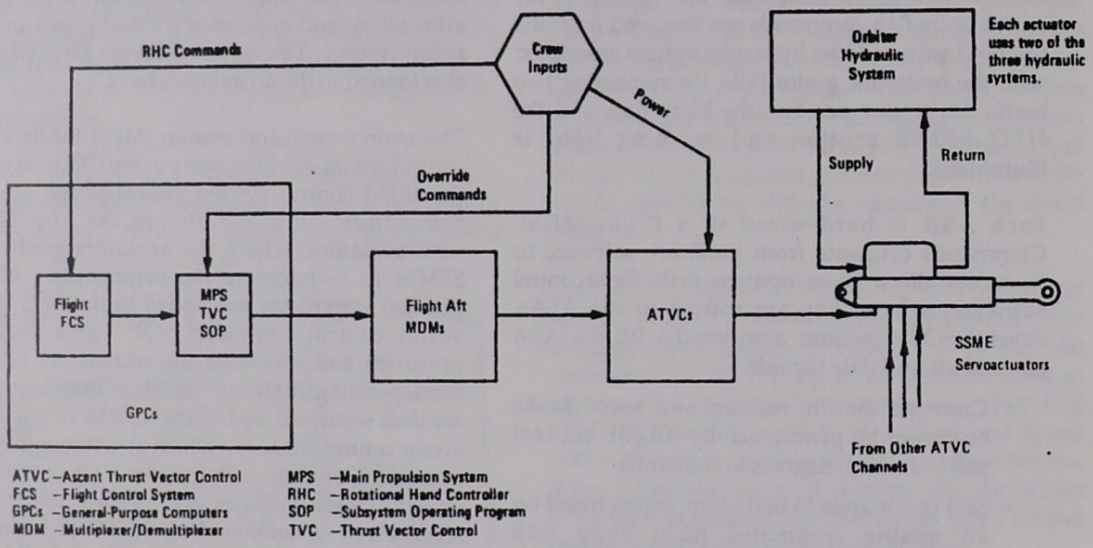

SSME Thrust Vector Control Interface Flow

one power spool in each actuator, which positions an actuator ram and the engine to control thrust direction.

The four servovalves in each actuator provide a force-summed majority voting arrangement to position the power spool. With four identical commands to the four servovalves, the actuator's force-sum action prevents a single erroneous command from affecting power ram motion. If the erroneous command persists for more than a predetermined time, differential pressure sensing activates an isolation driver. This driver energizes an isolation valve that isolates the defective servovalve and removes hydraulic pressure, permitting the remaining channels and servovalves to control the actuator ram spool, provided the *FCS CHANNEL 1, 2, 3, or 4* switch on panel C3 is in the *AUTO* position. A second failure would isolate the

defective servovalve and remove hydraulic pressure in the same manner as the first failure, leaving only two channels remaining.

Failure monitors are provided for each channel on the GNC SYS SUMM 1 CRT and *BACKUP C/W ALARM* light to indicate which channel has been bypassed for the MPS and/or solid rocket boosters. If the *FCS CHANNEL 1, 2, 3, or 4* switch on panel C3 is positioned to *OFF*, that ATVC channel is isolated from its servovalve on all MPS and solid rocket booster actuators. The *OVERRIDE* position of the switch inhibits the isolation valve driver from energizing the isolation valve for its respective channel and provides the capability of resetting a failed or bypassed channel.

The *ATVC 1, 2, 3, 4* power switches are located on panel O17. The *ON* position enables the ATVC channel selected; *OFF* disables the channel.

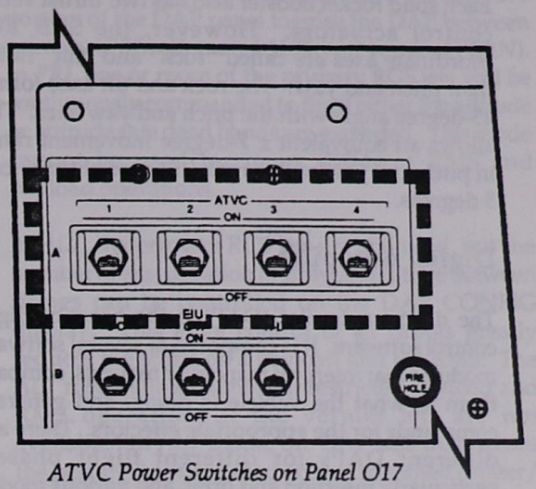

ATVC Power Switches on Panel O17

The SSME servoactuators change each main engine's thrust vector direction as needed during the flight sequence. Each main engine has one pitch actuator and one yaw actuator. The pitch actuator gimbals the engine up or down a maximum of 10.5 degrees from the installed null position. The yaw actuator gimbals the engine left or right a maximum of 8.5 degrees from the installed position. The installed null position for the left and right main engines is 10 degrees up from the X axis and 3.5 degrees outboard from an engine centerline parallel to the X axis. The center engine's installed null position is 16 degrees above the X axis for pitch and on the X axis for yaw. When any engine is installed in the null position, the other engines cannot collide with it.

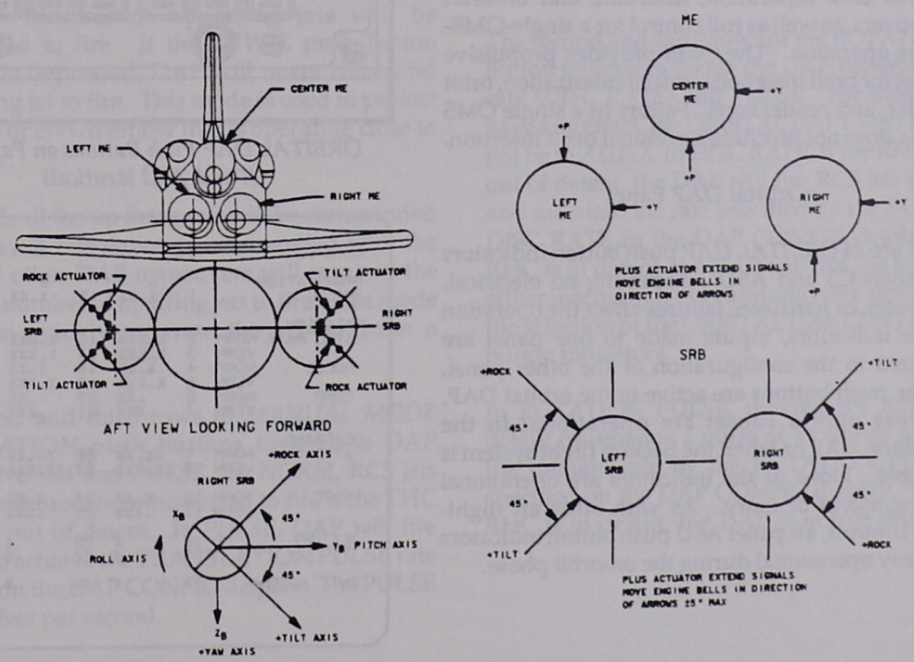

SSME and SRB Thrust Vector Control

Each solid rocket booster also has two thrust vector control actuators. However, the SRB TVC coordinate axes are called "rock" and "tilt" rather than pitch and yaw. The rock and tilt axes form a 45-degree angle with the pitch and yaw axes. This allows an equivalent ± 7-degree movement range in pitch and yaw with a rock/tilt gimbal range of ± 5 degrees.

Digital Autopilot

The digital autopilot (DAP) is the heart of flight control software. It is composed of several software modules that interpret maneuver requests, compare them to what the vehicle is doing, and generate commands for the appropriate effectors. There are different DAPs for different flight phases, particularly insertion and orbit, and various modes and submodes within each.

The DAP controls the orbiter in response to automatic or manual commands during insertion and on orbit. The effectors used to produce control forces and moments on the orbiter are the two OMS engines and the 38 primary RCS jets. Six vernier RCS jets are also available on orbit for attitude control. The forward and aft RCS jets also provide attitude control and three-axis translation during external tank separation, insertion, and on-orbit maneuvers, as well as roll control for a single-OMS-engine operation. The OMS provides propulsive control for orbit insertion, orbit circularization, orbit transfer, and rendezvous. Failure of a single OMS engine does not preclude a nominal orbit insertion.

Orbital DAP Panel

There are 24 *ORBITAL DAP* push button indicators on panels C3 and A6U. Assuming no electrical, computer, or hardware failures affect the operation of the indicators, inputs made to one panel are reflected in the configuration of the other panel. All the push buttons are active in the orbital DAP, whereas only a subset are operational in the transition DAP or when the backup flight system is engaged. None of the indicators are operational during ascent or entry. As with other aft flight-deck controls, aft panel A6U push button indicators are only operational during the on-orbit phase.

The orbital DAP is somewhat similar to the transition DAP, but has many options and capabilities added. These added capabilities can be best explained by a review of the *ORBITAL DAP* controls on panels C3 and A6U. Discussions of the various DAP modes follow.

The *SELECT* (*A* or *B*) push button indicators toggle the DAP between one of two configurations. These configurations are changed and displayed on the DAP CONFIG CRT display (SPEC 20). The A option typically has larger dead bands and higher rates than the B option.

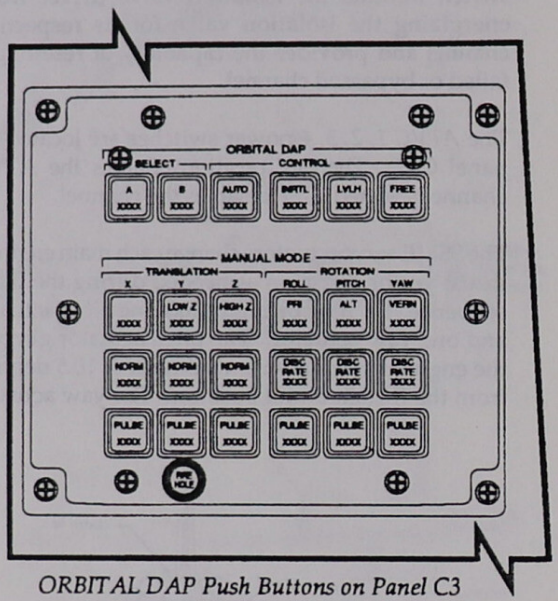

ORBITAL DAP Push Buttons on Panel C3
(Panel A6U identical)

```
XXXX/020/          DAP  CONFIG      XX X  DDD/HH:MM:SS
                                           DDD/HH:MM:SS
TRANSLATION                A              B
 PULSE              1    X.XX     15    X.XX
ROTATION
 DISC RATE  NORM    2    X.XXX    16    X.XXX
            VERN    3    X.XXX    17    X.XXX
 PULSE      NORM    4    X.XX     18    X.XX      INERTIAS
            VERN    5    X.XXX    19    X.XXX   29 IX X.XXX
 COMP       NORM    6    .XX      20    .XX     30 IY X.XXX
            VERN    7    .XXX     21    .XXX    31 IZ X.XXX
DEADBAND                                        ALT
 ATT        NORM    8    XX.XX    22    XX.XX    RATE DB
            VERN    9    XX.XXX   23    XX.XXX    32  X.XXX
                                                 JET OPT
 RATE       NORM   10    X.XX     24    X.XX      33     X
            VERN   11    .XXX     25    .XXX     # JETS
                                                  34     X
 JET OPT      P    12      X      26      X      ON TIME
              Y    13      X      27      X       35  X.XX
                                                 DELAY
 CNTL ACCEL        14      X      28      X       36  XX.XX
                                                      (XX)
```

DAP CONFIG Display (SPEC 20)

The *CONTROL* push button indicators toggle the DAP between *AUTO*, *INRTL*, *LVLH*, and *FREE*. In *AUTO* the orbiter's attitude is controlled by universal pointing (UNIV PTG) or orbit burn guidance. In this control mode, the DAP will rotate the orbiter about the shortest angle to the desired attitude. The rate of rotation is determined by DISC RATE items on the DAP CONFIG (SPEC 20) display. Once in attitude, the DAP will fire jets to maintain the attitude and attitude rates within the dead bands specified on the DAP CONFIG display.

In *CONTROL INRTL*, the orbiter is in inertial attitude hold, and in *CONTROL LVLH* the orbiter is in LVLH hold (LVLH hold will hold the orbiter's attitude fixed relative to the Earth). The *ROTATION DISC RATE* push button indicators must be illuminated for *INRTL* or *LVLH* to hold attitude.

The *CONTROL FREE* push button indicator puts the DAP into free drift. In this mode, the *ROTATION PULSE* push button indicators will illuminate, and RCS jets will not fire if the RHC and THC remain in detent.

The first row of the *MANUAL MODE TRANSLATION* push buttons control which of the +Z (up firing) jets will fire. Nominally, none of the push button indicators are illuminated, and the "normal" number of up firing jets will be commanded to fire. If the *LOW Z* push button indicator is depressed, DAP will never command an up firing jet to fire. This mode is used to protect a payload or crewmember that is operating close to the orbiter.

In *HIGH Z*, all the up firing jets will be commanded to fire if a +Z translation is commanded with the THC. All other DAP maneuvers will result in the "normal" number of up firing jets to fire. This mode is used to quickly separate the orbiter from a payload.

The second and third rows of *MANUAL MODE TRANSLATION* push buttons toggle the DAP between *NORM* and *PULSE*. In *NORM*, RCS jets will be continuously commanded to fire if the THC is moved out of detent. In *PULSE*, DAP will fire RCS jets to achieve the TRANSLATION PULSE rate specified on the DAP CONFIG display. The PULSE units are feet per second.

The first row of the *MANUAL MODE ROTATION* portion of the DAP panel toggles the DAP between primary (*PRI*), alternate (*ALT*), and vernier (*VERN*). In *PRI*, one or more of the primary RCS jets will be continuously commanded to fire if either the attitude or attitude rate dead bands are exceeded. This mode cannot be used for many different RMS and payload operations.

In *ALT*, the primary RCS jets are still used, but the number of jets, duration of firings, and time between firings can be controlled on the DAP CONFIG display. This extra control of jet firings greatly reduces the stress on a payload and the RMS. The *ALT* mode allows almost unrestricted payload and RMS operations if the vernier jets are not available. In *ALT* mode, the DAP also determines the best jet(s) to fire based on the combined orbiter/payload moments of inertias. These inertias are selected with CNTL ACCEL (item 14) on the DAP CONFIG display.

In *VERN*, the DAP uses the six vernier RCS jets for attitude control. Vernier control produces less stress on the RMS/payload, uses less propellant, and can achieve tighter dead bands than either *PRI* or *ALT*. Like the *ALT* mode, the best jet(s) to use are determined by the orbiter/payload moments of inertias.

The second and third rows of the *ROTATION* push button indicators toggle the DAP between discrete rate (*DISC RATE*) and *PULSE*. For these rows to have any effect, the *ORBITAL DAP CONTROL* must not be in *AUTO*. In *DISC RATE*, if the RHC is taken out of detent, the DAP will fire RCS jets to achieve and maintain the rate specified by the ROTATION DISC RATE in the DAP CONFIG display. If the RHC is in detent, the DAP will fire jets to maintain either inertial or LVLH attitude hold, depending on the selection of the *ORBITAL DAP CONTROL* push button indicators.

In *ROTATION PULSE*, moving the RHC out of detent commands a pulse of jet firings to increase the rotation rate by the ROTATION PULSE rate specified on the DAP CONFIG display. When the RHC is in detent, the DAP is in free drift for that

axis. Pushing the *CONTROL FREE* push button indicator is functionally equivalent to pushing all three *ROTATION PULSE* push button indicators.

Continuous rotation RCS jet firings can be obtained by moving the RHC past the soft stop. This continuous firing of jets can be obtained in either *DISC RATE* or *PULSE*. Even if *CONTROL* is in *AUTO*, moving the RHC out of detent will force the DAP to *INRTL*, and further movement past the soft stop will cause continuous jet firings.

Transition DAP

At MECO, the transition DAP becomes active, sending attitude hold commands to the RCS. External tank separation is automatically commanded 18 seconds after MECO. The transition DAP immediately sends commands to fire the orbiter's minus Z RCS jets, causing the orbiter to translate in the minus Z direction. When a rate of negative 4 feet per second is reached, RCS commands are removed. The transition DAP is used from MECO until transition to the on-orbit phase and in OPS 3 MM 301-303.

The external tank separation module compares minus Z delta velocities from the DAP attitude processor with the desired delta. Before this value is reached, the transition DAP and steering processor send commands to the RCS jet selection logic. A table-lookup technique is used for the primary RCS jets, and ten RCS down firing jets are commanded to fire. When the desired minus Z-delta velocity is reached, the translation command is set to zero. Rotation commands are also permitted during the external tank separation sequence. The RCS jet driver forward and aft assemblies provide the turn-on/turn-off jet selection logic signals to the RCS jets. There is also an RCS redundancy management program that permits only "good" RCS jets to be activated.

Insertion flight control is also accomplished with the transition DAP. The transition DAP uses commands from the guidance software for automatic maneuvers to the OMS burn attitude using RCS jets. During OMS-1 and OMS-2 (or only OMS-2 in a direct insertion), the transition DAP uses the OMS engines thrust vector control and RCS jets, as required. The transition DAP also receives commands from the commander's THC and the commander's or pilot's RHC. The transition DAP then takes these commands and converts them into appropriate RCS or OMS TVC commands. The transition DAP monitors the resultant attitude and attitude rates and sends the necessary commands to achieve the targeted attitude and attitude rate within premission-specified dead bands.

The flight crew interfaces directly with the transition DAP through the forward RHCs and THC and indirectly through entries to the OMS MNVR EXEC CRT display and the *ORBITAL DAP* push buttons on panel C3.

In the transition DAP, the commander's THC is active and totally independent of the DAP push buttons or RHC position or status. Whenever the commander's THC is out of detent in either plus or minus X, Y, or Z, translation acceleration commands are sent directly to the RCS jet selection logic for continuous RCS jet firing. Rotational commands may be sent simultaneously with translation commands within the limits of the RCS jet selection logic. For example, if both plus X and minus Z translations are commanded simultaneously, plus X translation receives priority.

For rotations, the flight crew can select either automatic or manual control via the *ORBITAL DAP CONTROL* push button indicators (*AUTO, INRTL*) or manual control by moving the RHC out of detent. In *INRTL*, the capability exists to rotate about any axis in one of two modes. When the *ROTATION PULSE* mode is selected, each RHC deflection results in a single burst of jet fire. In *DISC RATE* mode, RHC deflection results in a specified rate being commanded in that axis for the entire time the RHC is deflected. A free-drift mode *(INRTL/PULSE)* is also available in which no RCS jets are fired, or an attitude-hold mode, in which the DAP sends commands to maintain the current attitude with null rates within premission-specified dead bands. Also, if the RHC is deflected beyond a point called the soft stop, continuous RCS jet firings result. In translation, movement of the THC results in continuous jet firings. Pulse translation mode is not available in the transition DAP.

The transition DAP also involves maintaining the OMS thrust vector control. The OMS processor generates OMS engine gimbal actuator thrust vector control commands to produce the desired spacecraft/engine relationship for the specified thrust direction.

For the OMS burn, the orbital state vector (position and velocity) is produced by navigation using inertial measurement unit delta velocities during powered and coasting flight. This state is sent to guidance, which uses target inputs through the CRT to compute thrust direction commands for flight control and burn parameters for CRT display. Flight control converts the commands into OMS engine gimbal angles (thrust vector control) for the OMS burn.

OMS thrust vector control for a normal two-engine burn is entered by depressing the *ORBITAL DAP CONTROL AUTO* push button indicator with both RHCs within software detents. OMS manual thrust vector control for both OMS engines is entered by depressing the *INRTL* push button indicator or by moving the commander's or pilot's RHC out of detent. The flight crew supplies the rate commands to the burn vector control system instead of guidance. The manual RHC rotation requests are proportional to RHC deflections and are converted into gimbal angles. OMS thrust in either case is applied through the spacecraft's center of gravity.

Orbital DAP

The orbital flight control software includes an RCS DAP, an OMS TVC DAP, and an attitude processor module to calculate vehicle attitude, as well as logic to govern the selection of a DAP. The attitudes calculated by the attitude processor are displayed on the attitude director indicator, as well as on the OPS 201 UNIV PTG CRT display, which is available whenever orbit software is active. The vehicle attitude is used by the DAP to determine attitude and rate errors.

RCS DAP

The RCS DAP is used at all times in the on-orbit phase except during an OMS burn. This DAP controls vehicle attitudes and rates through RCS jet fire commands. Either the larger primary jets or the less powerful vernier jets can be used for rotational maneuvers, depending on whether *PRI*, *ALT*, or *VERN* is selected on the panel C3 *ORBITAL DAP CONTROL* panel. The choice of primary or vernier thrusters depends on fuel consumption considerations, how quickly the vehicle needs to be maneuvered to satisfy a mission objective, and interaction with payloads. *ALT* mode uses primary jets with fewer jet firings of a small duration and selectable delay between firings to allow attitude control when vernier jet capability is lost.

The rotation rates and dead bands, translation rate, and additional DAP options can be changed by the flight crew during the orbit phase using the DAP CONFIG CRT display. The flight crew loads the DAP with these options in two ways: one option set is accessed by depressing the *A* push button on the *ORBITAL DAP SELECT* panel, the other by depressing the *B* push button.

Each planned DAP configuration is given a reference number. Typically, the A configurations have larger dead bands and higher rates than the B configurations. The wide dead bands are used to minimize fuel usage, while the tight dead bands allow greater precision in executing maneuvers or holding attitude.

The RCS DAP operates in an automatic or one of two (INRTL or LVLH) manual rotation modes, depending on whether the flight crew selects *AUTO*, *INRTL*, or *LVLH* on the *ORBITAL DAP CONTROL* panel. The *INRTL* mode is also accessed when the RHC is moved out of its detent position. In both the automatic and manual modes, the rotation rate is controlled by the selection of DAP A or B and the information loaded in the DAP CONFIG display. In addition, in automatic, the DAP determines the required attitude to be achieved from the UNIV PTG display and then computes the RCS jet-fire commands necessary to achieve these requirements within the current set of dead bands.

In the manual rotation mode, the RCS DAP converts flight crew inputs from any of the three RHCs to RCS jet-fire commands, depending on whether *PULSE* or *DISC RATE* is selected on the *MANUAL MODE ROTATION ROLL, PITCH,* and *YAW* push buttons on panel C3 or A6U. Simply, when *PULSE* is selected, a single burst of jet fire is produced with each RHC deflection. The desired rotational rate is specified on the DAP CONFIG display (ROTATION). When *DISC RATE* is selected, jet firings occur whenever the RHC is out of detent, but inside the soft stop, thus maintaining the rotational rate specified on the DAP CONFIG display. When the RHC is beyond the soft stop, continuous jet firings will result. When the RHC is returned to detent, the current M50 attitude will be maintained within the specified dead bands.

Another manual RCS DAP mode, local vertical/local horizontal (LVLH), is used to maintain the current attitude with respect to the rotating LVLH reference frame. It is selected through the *LVLH* push button on panel C3 or A6U.

The RCS DAP includes only a manual translation capability, executed through the forward or aft THC. Only the primary RCS jets are used. Deflections of the THC result in RCS jet firings based on the *MANUAL MODE TRANSLATION* push button indicator selected on the *ORBITAL DAP* panel. *PULSE* mode results in a single burst of jet fire. *NORM* mode results in continuous jet firings as long as the THC is out of detent. Two additional submodes, *HIGH Z* and *LOW Z*, are available for special applications of +Z translations. *NORM* will fire three up-firing jets when a +Z translation is commanded and is the default. *HIGH Z* will fire all nine up-firing jets and would be used only for emergency escape from the vicinity of another orbiting body. *LOW Z* fires two aft-firing and two forward-firing jets for +Z maneuvers. *LOW Z* is used to maneuver near payloads that can be contaminated or damaged by the plume from an up-firing jet. Selection of *NORM*, *HIGH Z*, or *LOW Z* has no effect on choice of jets for ±X, ±Y, or -Z translations. *LOW Z* will inhibit upfiring jets for rotations.

OMS TVC DAP

The OMS thrust vector control DAP is available when an OMS burn is executed through the ORBIT MNVR EXEC display. The TVC DAP uses the guidance-generated velocity requirements and converts these into the appropriate OMS gimbal commands, assuming *AUTO* is selected on the *ORBITAL DAP CONTROL* panel. The TVC DAP also generates the OMS fire commands, the OMS shutdown commands, and, if necessary, due to OMS engine failure, the required RCS commands to maintain attitude control. Under *INRTL* selection, the TVC DAP takes inputs from the RHC to control attitude during the burn. When the RHC is in detent, the TVC DAP will maintain the current inertial attitude.

Before OMS ignition, the orbiter is automatically or manually maneuvered to the OMS ignition attitude using the RCS jets. Automatic TVC for one OMS engine is identical for two, except that the RCS processor is responsible for roll control. Single-OMS-engine burn is also through the orbiter's center of gravity, except when pitch or yaw rate commands are non-zero. If the left or right OMS engine fails during a burn, a red *LEFT* or *RIGHT OMS* light on panel F7 is illuminated. Since an OMS cutoff is based on time rather than velocity, a velocity residual may exist following the cutoff. The residual can be reduced to zero by the RCS through the THC.

Aerojet DAP

The aerojet DAP has the following characteristics: (1) flight adaptive (changes as a function of q-bar), (2) closed loop (compares feedback with command to generate an error signal), and (3) rate command (jets and aerosurfaces are commanded as necessary to achieve the desired rate). Once the desired rate is obtained, forward loop trim integrators maintain the desired rate. The aerojet DAP is activated by MM 304 transition, usually at EI-5, and runs through wheels stop on the runway. It slowly blends out the use of jets and blends in the use of aerosurfaces as the orbiter makes the transition from a spacecraft to hypersonic glider to subsonic glider to finally a high-speed 100-ton tricycle.

Pitch control is driven by either the auto system via alpha error (MM 304/602) or N_Z error (MM 305/603), which is turned into a rate command, or by CSS via RHC input. This rate command is compared to the pitch RGA output to come up with a rate error that is turned into a jet command until q-bar 40, and/or elevator (elevons moving symmetrically) command after q-bar 2. The body flap is used as a trim device to keep the elevons on or near schedule. This allows the elevons to be in the right position for maximum effectiveness, and to limit hinge moments and thermal effects. The speed brake is opened at V_{REL} = 10 k and is used supersonic as a lateral-directional stability device (speed brake opens causing a pitch-up moment that the elevons counteract by moving down, making the elevons more effective as an elevator and as ailerons). Subsonic, the speed brake is used as a q-bar modulator. (In a future OI, the speed brake will be used as an energy modulator.)

Other features of the pitch channel include:

- Pitch panel trim moves the elevons up or down. It requires trim be enabled and on, and either the CDR or PLT use the *TRIM* switches

on panel L2 or C3. There is no current use for this feature, especially with the body flap in *AUTO*.

- RHC pitch rate trim biases the output of the RHC by inputting a rate command. It requires trim to be enabled and on, and the CDR or PLT to use the "coolie hat" on their RHC. Any input by the RHC rate trim will be zeroed if the pitch axis is returned to AUTO. There is no current use for this feature except possibly to offset a bad selected output from the pitch RGAs.
- Nose turn compensation provides a pitch rate as a function of steady state turn yaw rate and bank angle during bank maneuvers in MM 305 to provide a constant flight path angle without the crew having to make a pitch adjustment.
- At nose gear touchdown, the pitch axis will mode to *AUTO* and auto-load relief will move the elevons down to off-load the main gear. (This is the only entry phase auto flight control feature in the BFS.)

Because of the very high angles of attack (alpha) the orbiter flies, there is a large difference in the velocity vector and the body X axis. For conventional airplanes, which fly at small alpha, a body axis roll is very close to a velocity vector bank. (Bank refers to a rotation about the velocity vector, or a stability axis rotation. Roll refers to a rotation about the X axis or a body axis rotation.) But at an alpha of 90 degrees, a velocity vector bank is a body axis yaw. Therefore, at 40 degrees alpha, normal alpha for the orbiter from MM 304 transition to V_{REL} = 10.5 k, a velocity vector bank requires a combination of a body axis roll and body axis yaw.

Another very important feature of the orbiter during early entry (V_{REL} > approximately 4 k) is that the vehicle rolls and yaws due to beta. Beta can be generated by either yaw jets or the adverse yaw caused by aileron displacement. (Adverse yaw means instead of rolling due to the increased lift caused by moving an aileron down, the vehicle will yaw due to the increased drag caused by moving an aileron down. This yaw produces beta.) Therefore, adverse yaw is purposely used during early entry to start a bank by using "reverse aileron" (left aileron up when initiating a bank to the right) along with yaw jets to develop a beta to get the vehicle banking. One of the two purposes of a gain called GALR is to determine whether the first output from the roll channel is reverse or proverse aileron, and how big the output should be. (Basically, no initial aileron is used until q-bar 10, reverse aileron is used from q-bar 10 until approximately V_{REL} = 3.8 k, and steadily increasing proverse aileron from V_{REL} = 3.8 k.) However, once a beta has been induced, it must be controlled. More precisely, beta dot must be made zero when the desired bank rate is achieved. Proverse aileron, used in the proper relationship to compensated body axis yaw and alpha, is introduced after the bank has been started to control beta and maintain the bank rate. This is called beta dot damping, and GALR controls how much aileron is used for damping and when it is terminated. Beta damping is used from q-bar 2 until Mach 0.9, although it starts ramping down at approximately V_{REL} = 3.8 k.

Roll channel is driven by either the auto system via bank angle error, which is turned into a bank rate command, or by CSS via RHC input. This bank rate command is multiplied by (1-GALR) to determine if the initial command should be reverse or proverse ailerons (ailerons refer to the use of elevons asymmetrically). It is converted into a roll rate command and is summed with beta dot damping (which is multiplied by GALR to determine magnitude) and compared with the output from the roll axis RGAs after compensation for roll rates from the steady-state turn. This is the rate error that is turned into jet commands until q-bar 10 and/or aileron commands after q-bar 2.

Other features of the roll channel are:

- Roll channel trim is automatic in *AUTO* until rollout. Because auto trim in CSS is terminated at Mach 1.25, the CDR may experience a roll rate on final that must be compensated for by displacing the RHC slightly to the right or left. That is because the trim required on final is different from the trim required when CSS was taken. The CDR should use roll panel trim to trim the RHC back to neutral. (Roll panel trim moves the ailerons up or down.)
- RHC roll rate trim is exactly the same as pitch rate trim.
- At main gear touchdown, auto load balance keeps the wings level during rollout and prevents the downwind tire from experiencing

excessive loads with crosswinds. After nose gear touchdown, load balance is faded out over 100 seconds.

- Any yaw jet firing causes the ailerons to trim in the proper direction to reduce the number of jet firings (right yaw jet firings will cause left aileron to trim up).
- No-yaw-jet (N-Y-J) entry mode eliminates all yaw jet commands and increases GALR to initially 1.7 (from 1.1) during early entry (q-bar > 10) to increase the reverse aileron to initiate banks. GALR decreases as a function of Mach, and by Mach 3.8, AUTO and N-Y-J GALR gains are the same. There is no difference between PASS and BFS N-Y-J, and both can be flown from q-bar > 20 (or very soon after the end of the first non-zero bank) to landing.
- Lateral acceleration (N_Y) feedback is used during rolls to compensate for any alpha error that would cause beta dot to be non-zero resulting in an uncoordinated roll and possibly rolloff.

Until Mach 0.6, yaw channel is driven by bank angle error, which is turned into a bank rate command. After Mach 0.6, the yaw channel is driven by the roll rate compensated for steady state turn so rudder pedal inputs are not required to maintain coordinated flight. The bank rate command or the compensated roll rate is converted to a body yaw command and summed with a beta compensation term until q-bar 20. That is compared with the output from the yaw axis RGAs after compensation for yaw rates from the steady state turn. This yaw rate error is then summed with lateral acceleration (N_Y), RPTA input, and yaw panel trim inputs. This is the rate that is turned into jet commands until Mach 1 or rudder commands after Mach 5. This causes the beta during early entry to cause the orbiter to bank, or during late entry (M < 0.6), coordinates the bank.

Other features of the yaw channel are:

- The RPTA does not directly control the rudder, but biases the lateral acceleration, and the rudder moves as necessary to maintain that lateral acceleration. Yaw panel trim performs exactly the same function.
- At GSENBL set (WOW set for 2 sec, theta < 0 deg, WONG), if in AUTO R/Y, the yaw channel will provide nose wheel steering commands to maintain runway centerline.

Operations

Ascent

The terminal count phase extends from T-20 minutes through SRB ignition. During this timeframe, the GNC OPS 1 software is loaded into the GPCs and verified by the ground. Guidance and flight control software are not active during Terminal Count. Navigation software is initialized at T-8 seconds when the onboard state vector is initialized and state vector propagation begins.

First stage guidance is active from SRB ignition through SRB separation plus 4 seconds. In this stage, guidance uses a pre-flight planned ("canned") table of roll, pitch, and yaw attitudes referenced to relative velocity. In addition to sending commands to flight control to obtain proper attitudes, the guidance software also sends commands to the MPS throttle per a pre-flight defined throttle schedule. Steering of the vehicle during first stage is accomplished by gimballing the SRB nozzles. First stage guidance also attempts to relieve vehicle aerodynamic loads based on sensed accelerations.

The navigation software during first stage propagates the vehicle state vector using the Super-G integration scheme using IMU data and a gravity model.

The flight control software during first stage uses commands issued by guidance. If the crew has selected control stick steering, commands are input through the RHC. Feedback from rate gyro assemblies and accelerometers is used to generate commands to reposition the SRB nozzles and main engine gimbals. Flight control sends the current vehicle attitude rates and the errors between current and desired attitudes to the attitude director indicator for display to the crew. If the crew does select control stick steering, the resultant control mode is discrete rate/attitude hold. In this mode, when the rotational hand controller is moved, a specified attitude rate is commanded as long as the

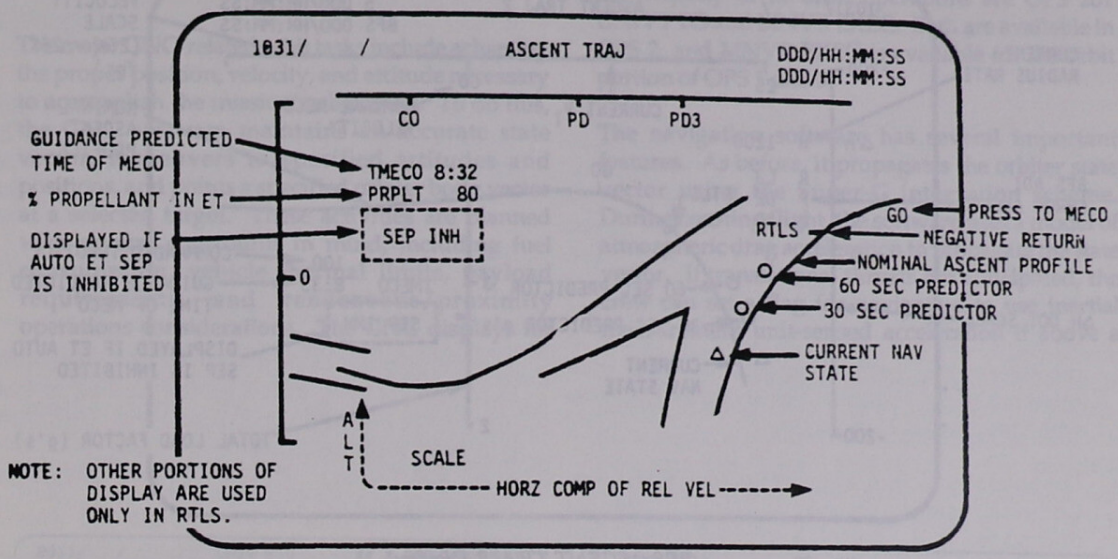

PASS ASCENT TRAJ Display

RHC is out of its neutral position. When the RHC is in detent, attitude hold commands are generated by flight control.

During first stage, no GNC-related crew actions are planned unless a failure occurs. Following launch, the crew uses the Ascent Flip Book for general procedures. To ensure that the auto flight control system is maintaining the expected ascent profile, the crew can scan the cue cards placed next to the dedicated displays.

Second stage ascent begins at SRB separation and extends through MECO and external tank separation. The second stage guidance software uses a cyclic, closed loop scheme to calculate the necessary commands to take the mated vehicle to a specified set of target MECO conditions. These conditions include cut-off velocity, radius from the Earth, flight path angle, orbital inclination, and longitude of the ascending node. The name of the targeting scheme is PEG (powered explicit guidance) 1. Guidance software also governs the main engine throttle commands such that 3 g's are not exceeded. The predicted time of MECO (TMECO) is calculated and displayed to the crew on the PASS ASCENT TRAJ display. Following SRB separation, it may take the PEG 1 guidance algorithm several cycles to converge and for TMECO to become stable. Forty seconds prior to MECO, guidance begins targeting only for the desired cut-off velocity.

Second stage navigation software continues as it did during first stage; i.e., it propagates a state vector using the Super-G integration scheme. Second stage flight control software continues through MECO as it did during first stage with the exception of gimballing the main engines versus the SRBs. After separation, attitude hold is commanded until guidance converges. At MECO, the transition (or TRANS) DAP, becomes active. It initially sends attitude hold commands. External tank separation is automatically commanded 18 seconds after MECO. The DAP immediately sets commands to fire the orbiter -Z RCS jets resulting in the orbiter translating in the -Z direction (away from the external tank). When -4 fps delta velocity is reached, the fire commands are removed.

During second stage, the crew monitors the onboard systems to ensure that the major GNC events occur correctly. These events include closed loop guidance convergence, 3-g throttling, MECO, external tank separation, and -Z translation.

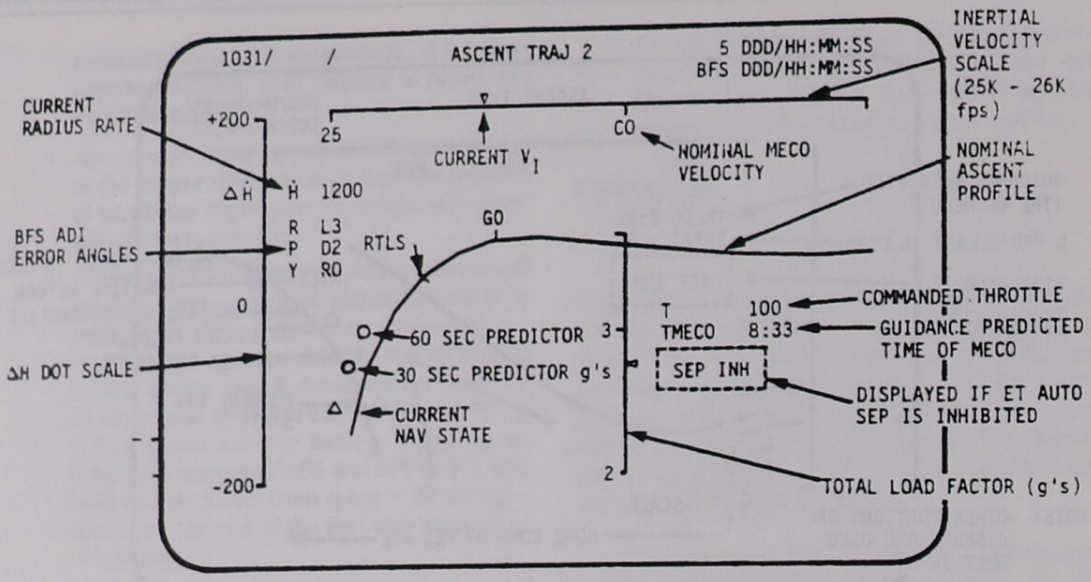

BFS ASCENT TRAJ 2 Display

The crew can monitor for guidance convergence by noting if the guidance-computed time of MECO is stabilized on the ASCENT TRAJ display. If not, the crew is required to take manual control of the vehicle. They can also ensure that 3 g's are not exceeded by monitoring the BFS ASCENT TRAJ 2 display or the accel tape AMI. The ASCENT TRAJ 2 display also can be used to monitor the MECO velocity. MECO is indicated by the illumination of three red *MAIN ENGINE STATUS* lights on panel F7 and the sudden decrease in acceleration. MECO confirm is also indicated by the illumination of the *ORBITAL DAP* push button lights.

Orbit Insertion

During the orbit insertion phase, the guidance software is used to target the OMS 1 and OMS 2 burns. The primary targeting scheme used is called PEG 4. This is a cyclic, closed loop scheme that computes the required delta velocity in order to achieve a target specified by a time of ignition. In addition, the guidance software is constrained to optimize fuel usage. For the OMS 1 burn, it also must ensure that the burn attitude at ignition is near the MECO attitude. The PEG 4 targeting scheme can compensate for the loss of one OMS engine or an RCS downmode during the burn if it detects the OMS loss. Prior to and during the burn, guidance computes the remaining burn time and total remaining delta velocity.

Navigation during the orbit insertion phase is identical in processing to that used in the mainstage whenever the IMU-sensed acceleration is greater than the noise threshold. If the IMU-sensed acceleration drops below the threshold, navigation ignores the IMU data and propagates the state vector using an atmospheric drag model of the orbiter.

Insertion flight control is accomplished using the transition DAP. The transition DAP uses commands from guidance for automatic maneuvers to burn attitude using the RCS jets. During the OMS 1 and 2 burns, it uses the OMS engines and RCS jets as required. It can also receive commands from the crew via the forward THC and RHC. The transition DAP takes these commands and converts them into the appropriate RCS commands. It then monitors the resultant attitude and attitude rates. The necessary commands are sent to achieve the targeted attitude and attitude rate within the pre-mission specified deadbands.

For rotations, the crew selects either *AUTO* or *INRTL* control on the *ORBITAL DAP* panel or by moving the RHC. In translation, movement of the THC results in continuous jet firings.

Orbit GNC

The major GNC-related orbit tasks include achieving the proper position, velocity, and attitude necessary to accomplish the mission's objectives. To do this, the GNC software maintains an accurate state vector, maneuvers to specified attitudes and positions, and points a specified orbiter body vector at a selected target. These activities are planned with several constraints in mind, including fuel consumption, vehicle thermal limits, payload requirements, and rendezvous/proximity operations considerations. The GNC displays for the majority of on-orbit operations are OPS 201 UNIV PTG and MNVR EXEC. Both are available in OPS 2, and MNVR EXEC is available for the orbit portion of OPS 1 and 3.

The navigation software has several important features. As before, it propagates the orbiter state vector using the Super-G integration scheme. During coasting flight, the software uses a model of atmospheric drag acceleration to propagate the state vector. If translational thrusts are anticipated, the crew can set a flag for navigation to use inertial measurement unit-sensed acceleration if above a

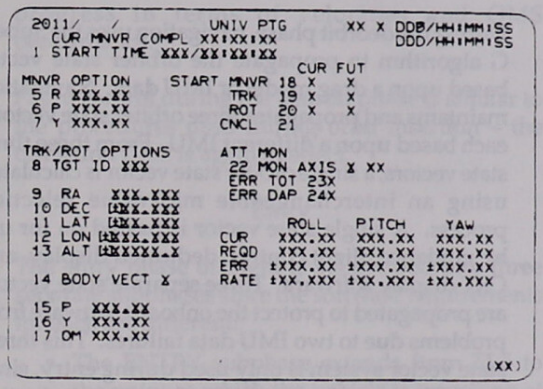

UNIV PTG Display

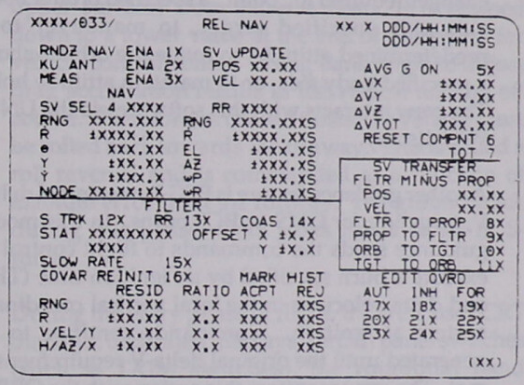

REL NAV Display (SPEC 33)

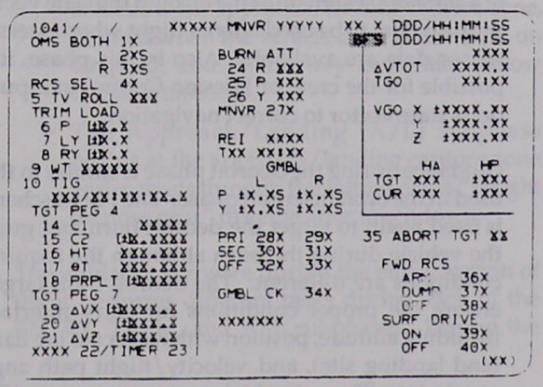

MNVR Display

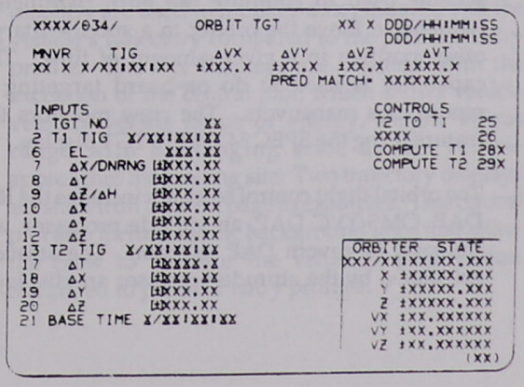

ORBIT TGT Display (SPEC 34)

noise threshold value. When this flag is set, the crew can monitor the thrust on the REL NAV display (SPEC 33) through an item called AVG G.

Another navigation option that is available on-orbit is called rendezvous navigation. When this option is enabled by a crew input on the REL NAV display, the software maintains a target state vector, as well as the orbiter state vector. In this mode, navigation can use external sensor data from the star tracker, COAS, or rendezvous radar in computing the orbiter target state vector. As there is currently no method on board to independently compute corrections to the state vector, periodic updates are sent from Mission Control to correct any errors that develop with the on-board state vector.

The on-orbit guidance software has several features. Universal pointing is used to compute attitude changes required to "point" a specified orbiter body axis at a specified target, to maneuver to a predetermined attitude, to rotate the orbiter about a specified body axis, or to maintain attitude hold. The crew interacts with this software via the UNIV PTG display.

Another guidance feature is PEG 7, or external delta-V, targeting for OMS or RCS burns. In this mode, guidance sends the commands to flight control to execute a burn specified by an ignition time (TIG) and delta velocities in the local vertical coordinate system at ignition. Commands continue to be generated until the original delta-V requirement is met. The crew monitors this option with the ORBIT MNVR EXEC display.

The third guidance capability is an on-orbit targeting scheme used to compute the burn parameters required to move the orbiter to a specified target offset position in a given amount of time. This capability is used to do on-board targeting of rendezvous maneuvers. The crew monitors this feature using the SPEC 34 ORBIT TGT display.

The orbital flight control software includes the RCS DAP, OMS TVC DAP, an attitude processor, and the logic to govern DAP selection. The attitudes calculated by the attitude processor are displayed on the ADI and the UNIV PTG display screen. The vehicle attitude is used by the digital autopilot to determine attitude and rate errors.

Options for the DAP, including the translation rate, rotation rates, and deadbands, are changeable by the crew during the orbit phase using the DAP CONFIG display. The Flight Plan specifies which DAP configurations should be loaded at each time in the mission.

Deorbit

The deorbit phase of the mission includes the deorbit burn preparations, including the loading of burn targets, the execution and monitoring of the burn, post-burn reconfiguration, and a coast mode until about 400,000 feet. The deorbit and entry flight software is referred to as OPS 3.

During the deorbit phase, navigation uses the Super-G algorithm to propagate the orbiter state vector based upon a drag model or IMU data. Navigation maintains and propagates three orbiter state vectors, each based upon a different IMU. From these three state vectors, a single orbiter state vector is calculated using an interchangeable mid-value selection process. A single state vector is passed on for use by guidance, flight control, dedicated display, and CRT display software. Three separate state vectors are propagated to protect the onboard software from problems due to two IMU data failures. This three-state vector system is only used during entry, since that phase is most critical with respect to navigation errors and their effects on vehicle control and an accurate landing. Another feature available during this phase is the software computational capability of a statistical estimate of the error in the state vector propagation, to be used later in flight when external sensor data are available. Also in this phase, it is possible for the crew or Mission Control to input a delta state vector to correct navigation.

Guidance during the deorbit phase is similar to that used in the orbit insertion phase. The PEG 4 scheme is used again to target the deorbit burn and guide the vehicle during the burn although the required conditions are different. The deorbit burn targets ensure the proper conditions for entry interface, including altitude, position with respect to the Earth (and landing site), and velocity/flight path angle constraints. These deorbit burn targets are specified

preflight for a nominal mission, although it is also possible for the ground to uplink changes or for the crew to recompute them onboard. It is also possible to specify OMS fuel "wasted" (burned out of plane) during the burn in order to establish an acceptable orbiter center of gravity (c.g.) for entry. The crew is responsible for loading these targets on the DEORB MNVR EXEC display.

The display is used to set up and target the OMS burn, to specify fuel to be wasted, to display the required burn attitude, to initiate an automatic attitude maneuver, and to monitor the progress of the burn. The crew's task for deorbit guidance includes entering the correct burn targets in the DEORB MNVR EXEC display and maneuvering to burn attitude either in *AUTO* or manually using the RHC. The burn itself is typically executed in *AUTO* such that the crew's task is to monitor the burn progress in terms of velocities and OMS performance.

Flight control during the deorbit phase is similar to the procedures used during orbit insertion – the transition DAP is again in effect.

Entry

The entry phase of flight is subdivided into three separate subphases since the software requirements for each are different:

- The ENTRY subphase extends from EI-5 to the point at which the vehicle is travelling at 2500 fps (≈83,000 ft altitude).
- The Terminal Area Energy Management (TAEM) subphase begins at 2500 fps and extends to the approach/landing capture zone, defined when the vehicle is on glide-slope, on airspeed, and on runway centerline (below 10,000 ft altitude).
- The Approach/Landing (A/L) subphase begins at the approach/landing capture zone and extends through the setting of the "weight on nose gear" discrete after touchdown.

The guidance software during the entry portion of flight performs different tasks during each of the ENTRY, TAEM, and A/L subphases. During the ENTRY subphase, guidance attempts to keep the vehicle on a trajectory that provides protection against excessive temperature, dynamic pressure, and normal acceleration (Nz) limits. To do this, the software sends commands to flight control to guide the vehicle through a tight corridor limited on one side by altitude and velocity requirements for ranging (in order to make the runway), and on the other side by the thermal, g, and Nz constraints. Ranging is accomplished by adjusting drag acceleration to velocity such that the vehicle stays in that corridor. Drag acceleration can be adjusted in two ways: by modifying angle of attack, which changes the vehicle's cross sectional area with respect to the airstream, or by adjusting the vehicle bank angle, which affects lift and thus the vehicle's sink rate into denser atmosphere. The vehicle's angle of attack is maintained at a high value (40 degrees) during most of this phase to protect the upper surfaces from extreme heat. It is ramped down to a lower value at the end of this phase for vehicle controllability. Using bank angle to adjust drag acceleration results in the vehicle turning off course. Therefore, at certain times, the vehicle must be rolled back towards the runway. This is called a roll reversal and is commanded as a function of azimuth error from the runway. The ground track during this phase, then, looks like a series of S-turns.

During the entry phase of flight, the crew uses CRT displays, dedicated displays, certain panel switches (such as *TRIM* switches), the rotational hand controller, and the speed brake thrust controller to control the vehicle. Between the ENTRY interface and the TAEM interface, five ENTRY TRAJ CRT displays sequentially become available. These displays are used to monitor autoguidance and the vehicle's trajectory compared to the planned entry profile. The five displays are identical with the exception of the central plot, which shows vehicle velocity versus range or energy/weight versus range with a changing scale as the vehicle approaches the landing site. Two trajectory displays are shown on the next page as examples. This central plot also includes static background lines that allow the crew to monitor the vehicle's progression compared to planned entry profiles.

Once TAEM interface is reached, the CRT display VERT SIT 1 becomes available. This display includes a central plot of vehicle altitude with respect to range. The plot has three background lines that represent the nominal altitude versus range profile, a dynamic pressure limit profile, and a maximum lift-over-drag profile. At 30,000 feet altitude, the scale and titles on the display change to VERT SIT 2. This second display is used through landing. When the A/L interface conditions are met, a flashing 'A/L' is displayed on the VERT SIT 2 display.

Guidance software during TAEM generates the necessary commands to enable the vehicle to achieve the proper A/L conditions by following an energy/ weight versus range profile. During TAEM, as the name implies, the goal is to manage the vehicle's energy while the orbiter travels around an imaginary arc called the heading alignment cone (HAC). An HAC is an imaginary cone which, when projected on the Earth, lies tangent to the extended runway centerline. The guidance software performs the TAEM function as follows:

- S-Turns: If the vehicle is high on energy, it dissipates the excess by turning away from the HAC until the proper energy conditions are met.
- HAC Acquisition: Turns the vehicle toward the targeted tangent point on the HAC and flies to this point.

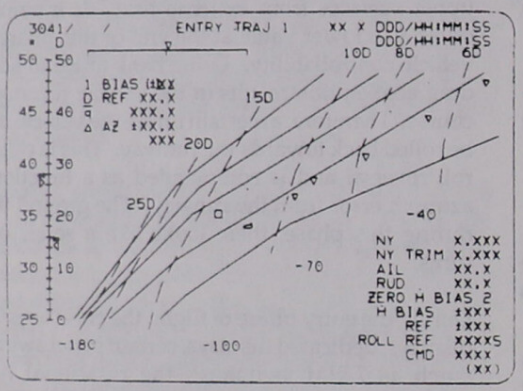

ENTRY TRAJ 1 Display

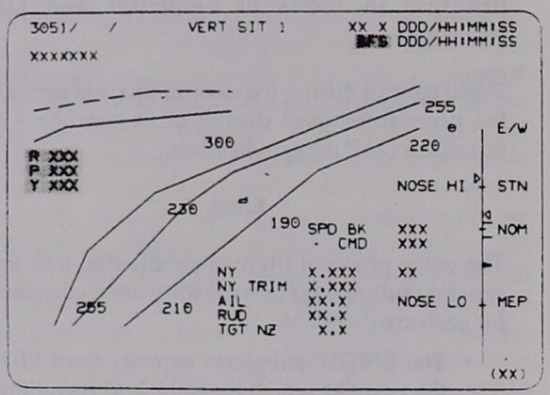

VERT SIT 1

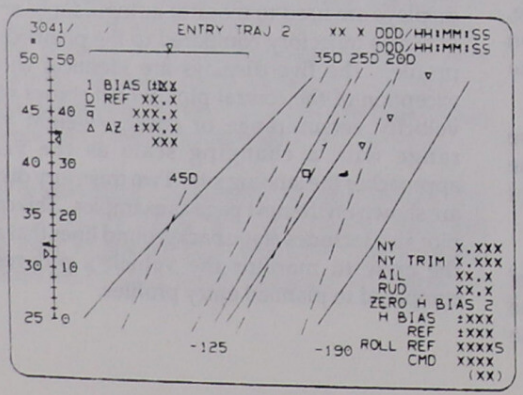

ENTRY TRAJ 2 Display

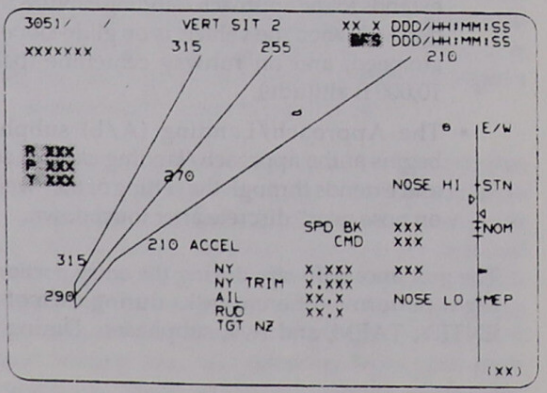

VERT SIT 2

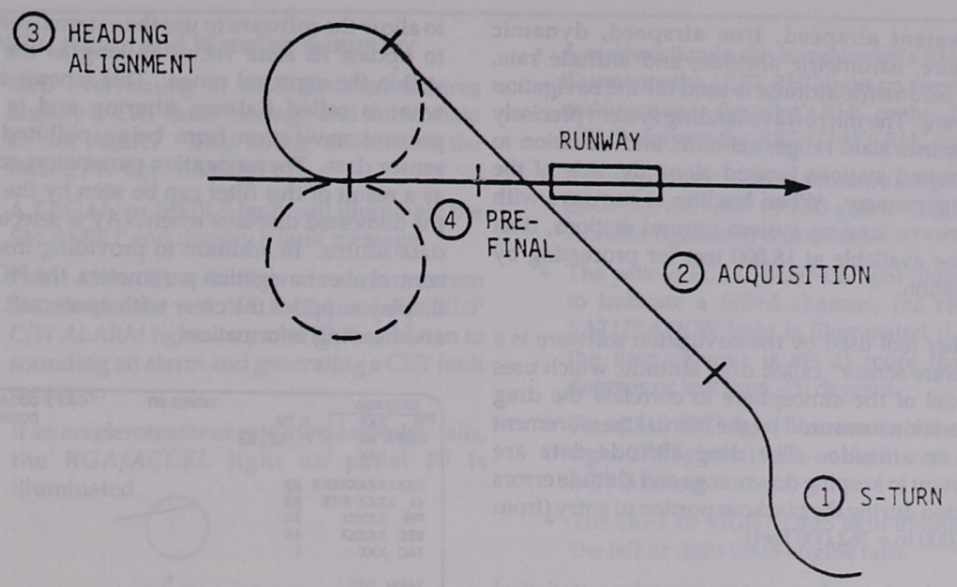

TAEM Guidance Subphases

- Heading Alignment: Flies the vehicle around the HAC to the point at which the HAC is tangent to the runway centerline, called the nominal energy point (NEP).
- Prefinal: From the NEP, flies the vehicle down the runway centerline until the proper A/L conditions (airspeed, altitude, distance off centerline) are met.

Within the above steps, TAEM guidance makes the necessary adjustments to account for various energy conditions.

Approach/landing guidance software commences when the vehicle is about 10,000 feet from the runway centerline and near the proper altitude and flight path angle for the outer glide slope (19 degrees or 17 degrees, depending on orbiter weight). The guidance software sends commands to keep the vehicle tracking the runway centerline and on the steep glide slope until approximately 1750 feet, at which point a pre-flare maneuver is performed to put the orbiter on a shallow glide slope (1.5 degrees). Final flare is initiated at about 30 feet, reducing the sink rate to near zero for touchdown. At this point, guidance software generates commands directing the vehicle on the runway.

Entry flight control is accomplished using the aerojet DAP, which generates effector and RCS jet commands to control and stabilize the vehicle during its descent from orbit. During exoatmospheric flight, or flight during which certain aerosurfaces are rendered inefficient due to adverse aerodynamics, a combination of aerosurface and RCS jet commands are used. For example, at Mach > 5, the angle of attack profile flown has the vertical tail virtually blanked so that the rudder is almost useless. To compensate for this, the flight control system uses yaw jets and the yaw due to aileron movement to keep the vehicle sideslip within limits.

In the entry phase, navigation software functions similarly to the deorbit phase (i.e., three state vectors computed using the Super-G algorithm corresponding to each inertial measurement unit) with the exception that additional external sensor data are sequentially incorporated. This information is used to provide the accuracy necessary to bring the orbiter to a pinpoint landing and to some extent to maintain vehicle control. The TACAN system provides slant range and magnetic bearing to various fixed stations around the landing site and becomes available at about 156,000 feet altitude until 1500 feet above ground level. The ADTA system provides pressure data to compute angle of attack,

equivalent airspeed, true airspeed, dynamic pressure, barometric altitude, and altitude rate. Only barometric altitude is used for the navigation software. The microwave landing system precisely determines slant range, azimuth, and elevation to the ground stations located along the side of the landing runway. When landing at runways with microwave landing system ground stations, data become available at 18,000 feet for processing by navigation.

Another tool used by the navigation software is a "software sensor" called drag altitude, which uses a model of the atmosphere to correlate the drag acceleration measured by the inertial measurement units to altitude. The drag altitude data are important in keeping downrange and altitude errors bounded during the blackout portion of entry (from ≈ 265,000 to ≈ 162,000 feet).

The navigation software also maintains a statistical estimate of the expected error in the state vector. When an external sensor, such as TACAN, becomes available to the navigation software, a check is made to see if the data lie within the current expected range of error. Crew controls are provided on the HORIZ SIT display to force the software to accept or inhibit the external sensor data regardless of whether they lie within this expected range. There is also a control on the display that may be selected to allow the software to use the external sensor data to update its state vector as long as the data lie within the expected range. This scheme is part of what is called Kalman filtering and is used to prevent navigation from being polluted by bad sensor data. The navigation parameters computed as a result of this filter can be seen by the crew on the dedicated displays when *NAV* is selected as the data source. In addition to providing insight and control over navigation parameters, the HORIZ SIT display supplies the crew with spacecraft position and heading information.

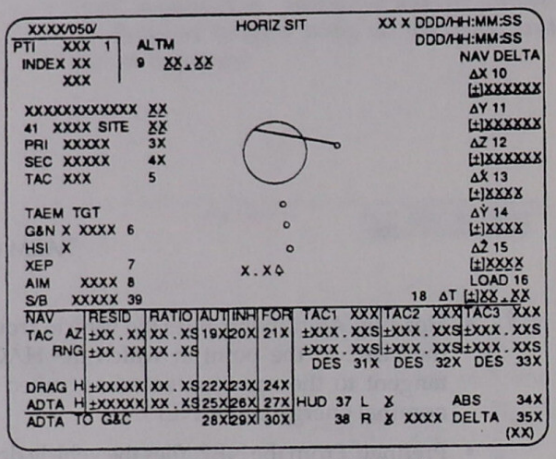

HORIZ SIT Display (SPEC 50)

GNC Caution and Warning Summary

- IMU overheating or BITE-detected failures display a CRT fault message and annunciate an *SM ALERT*. IMU failure illuminates the *IMU* C/W light on panel F7.
- A TACAN or MSBLS fault will illuminate the *SM ALERT* and display a fault message.
- Fault detection in the air data system illuminates the red *AIR DATA* and *BACKUP C/W ALARM* lights on panel F7, in addition to sounding an alarm and generating a CRT fault message.
- If an accelerometer or rate gyro assembly fails, the *RGA/ACCEL* light on panel F7 is illuminated.
- A malfunction in the commander's RHC will illuminate the *LEFT RHC* light on panel F7; a malfunction in the pilot's RHC or the aft RHC will illuminate the *RIGHT/AFT RHC* light.
- If the hydraulic system pressure drops below 2,800 psi, the *HYD PRESS* and *BACKUP C/W ALARM* lights will illuminate.
- The yellow *FCS CHANNEL* light illuminates to indicate a failed channel; the red *FCS SATURATION* light is illuminated if one of the four elevons is set at more than +15 degrees or less than –20 degrees.
- The *OMS TVC* light illuminates if the left or right OMS gimbal fails, or if software detects a TVC failure.
- The *LEFT* or *RIGHT OMS* light illuminates if the left or right OMS engine fails.

O_2 PRESS	H_2 PRESS	FUEL CELL REAC (R)	FUEL CELL STACK TEMP	FUEL CELL PUMP
CABIN ATM	O_2 HEATER TEMP	MAIN BUS UNDERVOLT (R)	AC VOLTAGE	AC OVERLOAD
FREON LOOP (R)	AV BAY/ CABIN AIR	IMU	FWD RCS (R)	RCS JET
H_2O LOOP (R)	RGA/ACCEL	AIR DATA (R)	LEFT RCS (R)	RIGHT RCS (R)
———	LEFT RHC (R)	RIGHT AFT RHC	LEFT OMS (R)	RIGHT OMS (R)
PAYLOAD WARNING (R)	GPC	FCS SATURATION (R)	OMS KIT	OMS TVC (R)
PAYLOAD CAUTION	PRIMARY C/W	FCS CHANNEL	MPS (R)	———
BACKUP C/W ALARM (R)	APU TEMP	APU OVERSPEED	APU UNDERSPEED	HYD PRESS

GNC Caution and Warning Lights on Panel F7

GNC Summary Data

- GNC systems determine the current state of motion of the vehicle, compute actions to change its state of motion, and apply corrective maneuvers to achieve the change.
- GNC elements are navigation and flight control system hardware and digital autopilot software.
- A bad orbiter navigation state can degrade flight control, since navigation data are used to set control gains and choose control effectors.
- Navigation hardware includes (1) IMUs, which sense vehicle orientation; (2) star trackers, which sense vehicle line of sight vectors; (3) COAS, which allows the crew to manually determine line of sight vectors; (4) TACAN, which senses vehicle position with respect to a ground-based station; (5) air data system, which senses temperature and pressure; (6) microwave scanning beam landing system; and (7) radar altimeters.
- The flight control system hardware includes four accelerometer assemblies, four orbiter rate gyro assemblies, four SRB rate gyro assemblies, rotational and translational hand controllers, rudder pedal transducer assemblies, two speed brake/thrust controllers, two body flap switches, panel trim switches, aerosurface servoamplifiers, and ascent thrust vector control.
- Digital autopilot (DAP) software interprets maneuver requests, compares them to what the vehicle is doing, and generates commands for the appropriate effectors.
- Different DAPs function during different flight phases. Transition DAP (TRANSDAP) becomes active at MECO; orbit DAP includes an RCS DAP, an OMS TVC DAP, and an attitude processor module. TRANSDAP is used again for the deorbit burn until DI -5 minutes. Aerojet DAP is used from EZ -5 until wheel stop on landing.
- Primary GNC-related switches and push buttons are located on panels C3, A6U, F2, F3, and F4. Other switches, push buttons, and circuit breakers are located on the following: F6, F7, F8, O5, O6, O7, O8, O9, O14, O15, O16, O17, and L1.
- GNC-related information and crew access are provided by several displays: GNC SYS SUMM 1, IMU ALIGN, GND IMU CNTL/MON, S TRK/COAS CNTL, HORIZ SIT, MNVR, UNIV PTG, DAP CONFIG, PASS ASCENT TRAJ 1, BFS ASCENT TRAJ 2, REL NAV, ORBIT TGT, ENTRY TRAJ 1 -5, VERT SIT 1, AND VERT SIT 2.

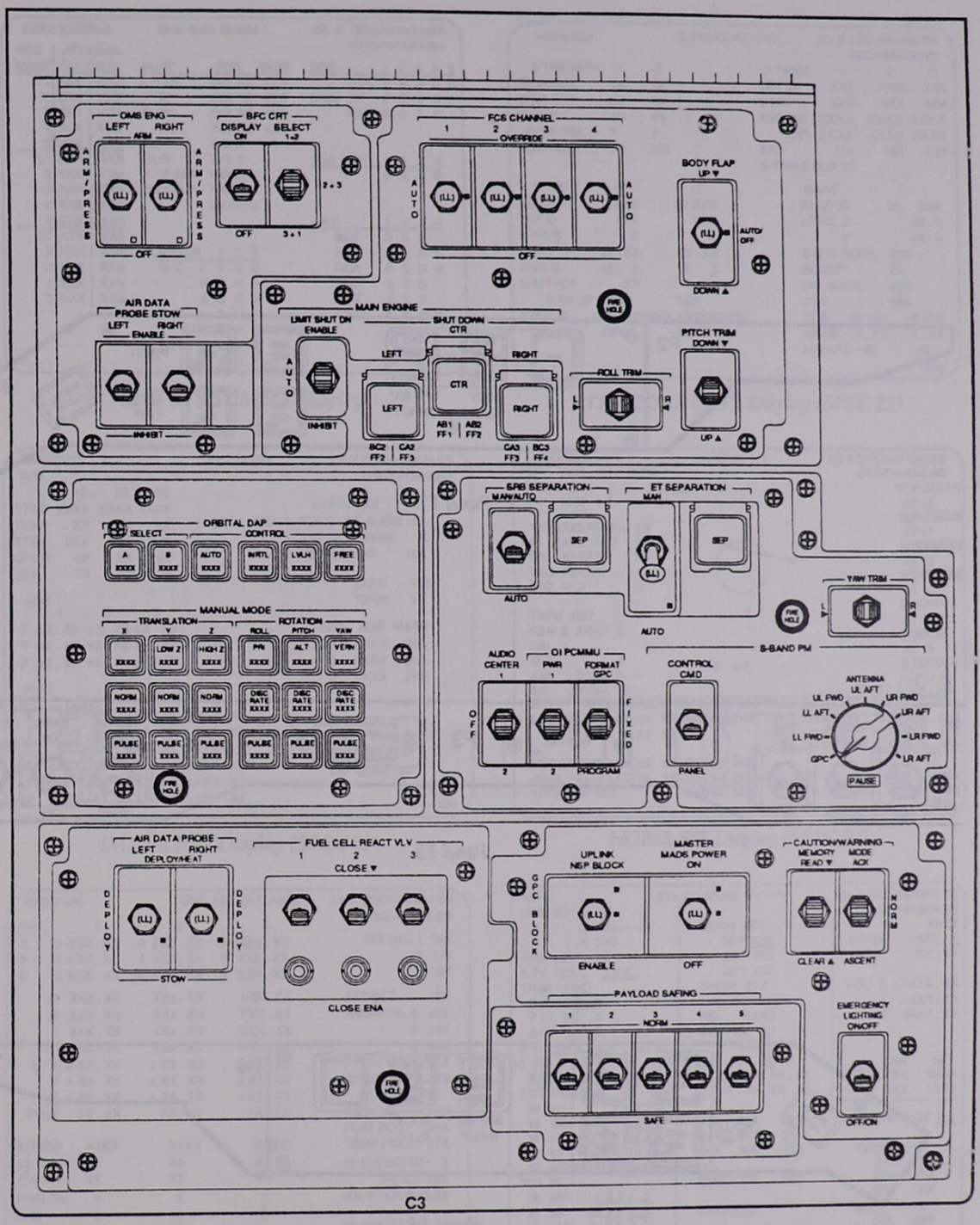
OMS ENG
LEFT
RIGHT
ARM
ARM/PRESS
OFF
BFC CRT
DISPLAY SELECT
ON
1+2
2+3
OFF
3+1
FCS CHANNEL
1
2
3
4
OVERRIDE
AUTO
OFF
BODY FLAP
UP
DOWN
AUTO/OFF
AIR DATA PROBE STOW
LEFT
RIGHT
ENABLE
INHIBT
MAIN ENGINE
LIMIT SHUT DN ENABLE
SHUT DOWN CTR
LEFT
CTR
RIGHT
INHIBT
BC2 FF2
CA2 FF3
AB1 FF1
AB2 FF2
CA3 FF3
BC3 FF4
ROLL TRIM
PITCH TRIM
DOWN
UP
FIRE HOLE
ORBITAL DAP
SELECT
CONTROL
A
B
AUTO
INRTL
LVLH
FREE
MANUAL MODE
TRANSLATION
ROTATION
X
Y
Z
ROLL
PITCH
YAW
LOW Z
HIGH Z
PRI
ALT
VERN
NORM
DISC RATE
PULSE
SRB SEPARATION
MAN/AUTO
SEP
ET SEPARATION
MAN
AUTO
YAW TRIM
AUDIO CENTER
OI PCMMU
PWR
FORMAT GPC
OFF
FIXED
PROGRAM
CONTROL CMD
PANEL
S-BAND PM
ANTENNA
UL AFT
UR FWD
UR AFT
LL FWD
LR FWD
GPC
LR AFT
PAUSE
AIR DATA PROBE
LEFT
RIGHT
DEPLOY/HEAT
DEPLOY
STOW
FUEL CELL REACT VLV
1
2
3
CLOSE
CLOSE ENA
UPLINK NSP BLOCK
MASTER MADS POWER ON
GPC BLOCK
ENABLE
OFF
CAUTION/WARNING
MEMORY READ
MODE ACK
MODE
CLEAR
ASCENT
PAYLOAD SAFING
NORM
SAFE
EMERGENCY LIGHTING ON/OFF
OFF/ON
C3

Panel C3

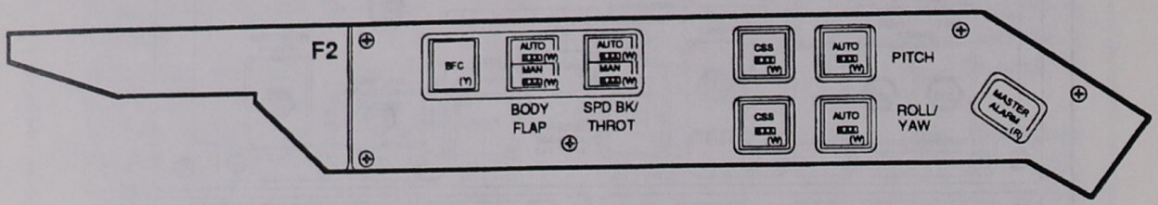

Panel F2

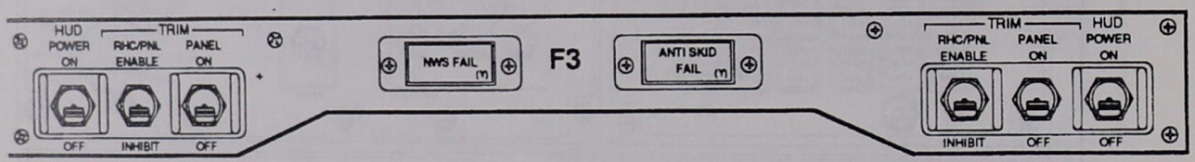

Panel F3

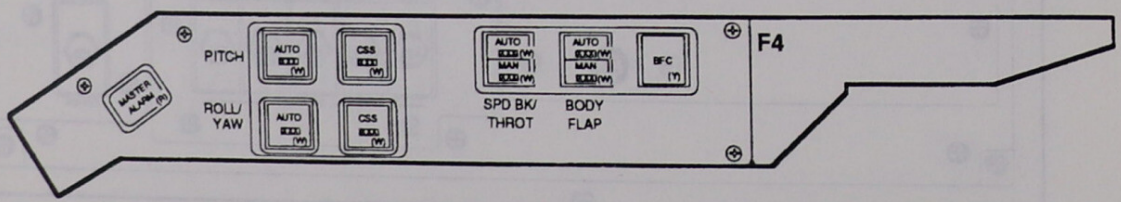

Panel F4

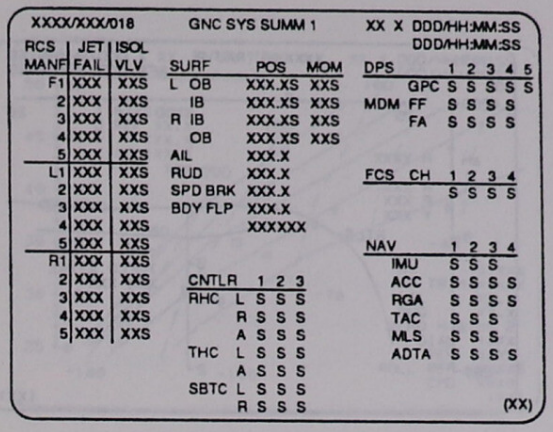

GNC SYS SUMM 1 Display

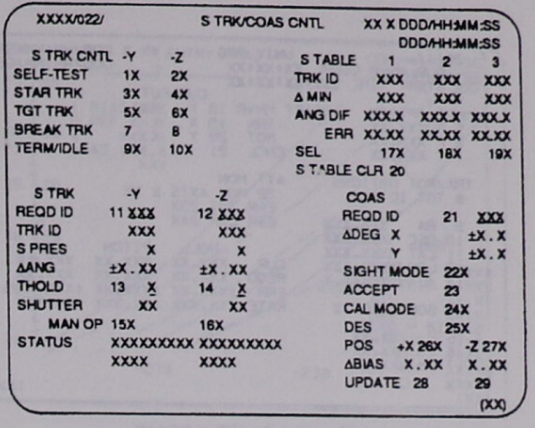

S TRK/COAS CNTL Display (SPEC 22)

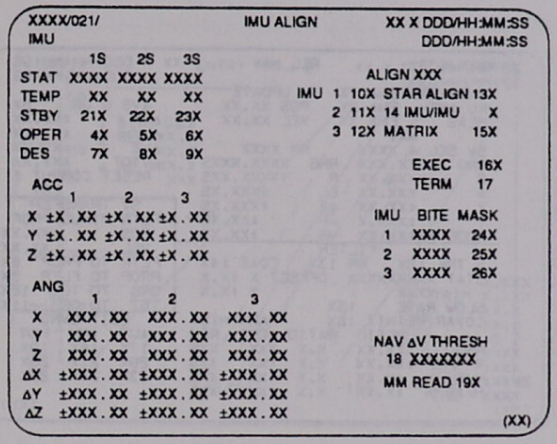

IMU ALIGN Display (SPEC 21)

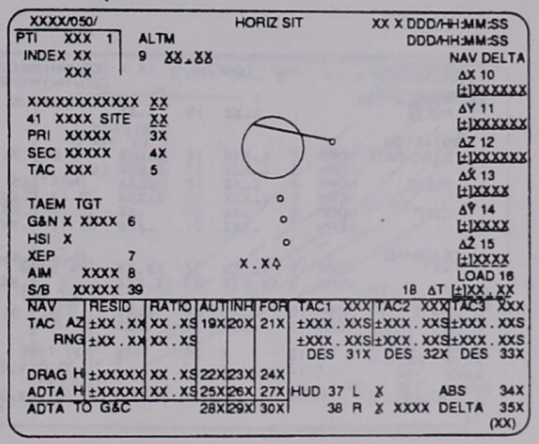

HORIZ SIT Display (SPEC 50)

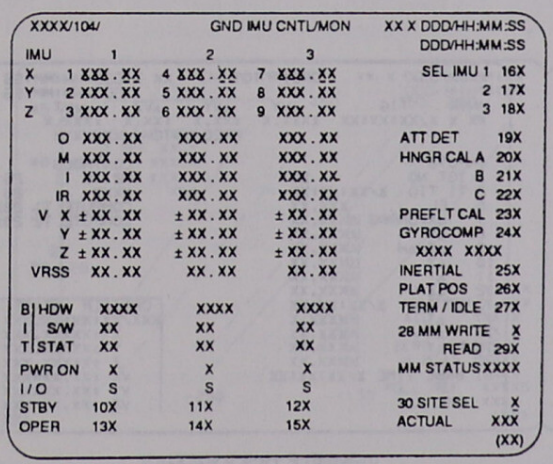

GND IMU CNTL/MON Display (SPEC 104)

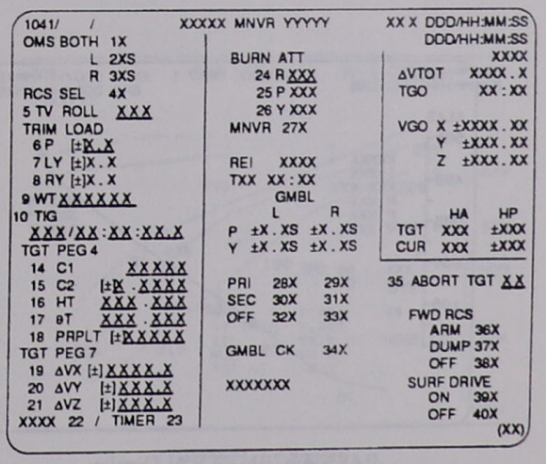

MNVR Display

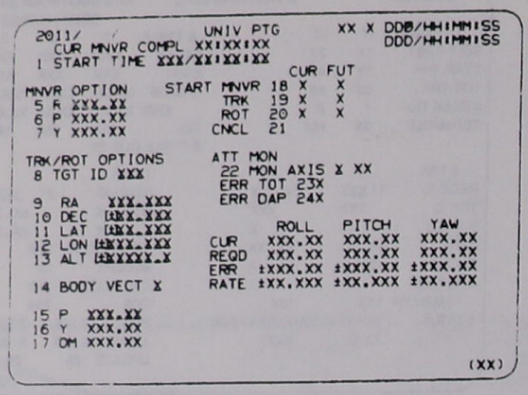

UNIV PTG Display

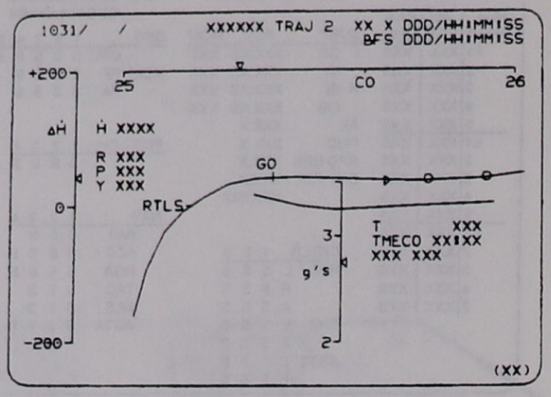

BFS ASCENT TRAJ 2 Display

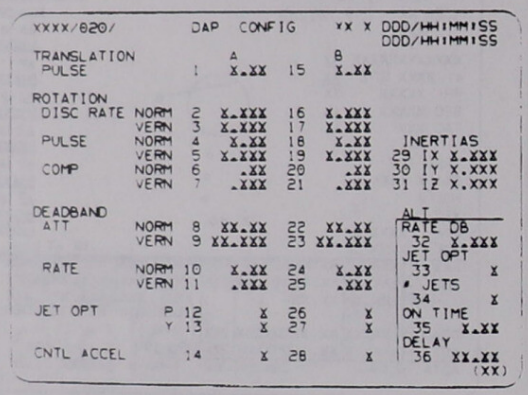

DAP CONFIG Display

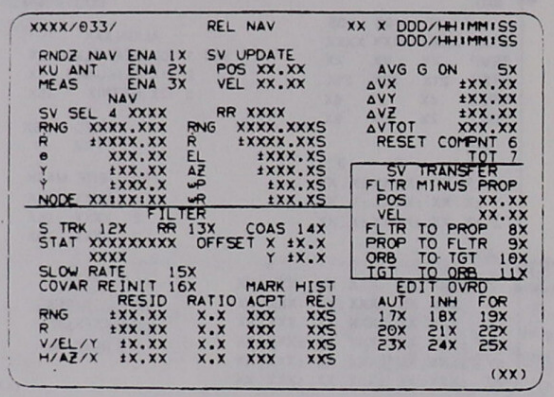

REL NAV Display

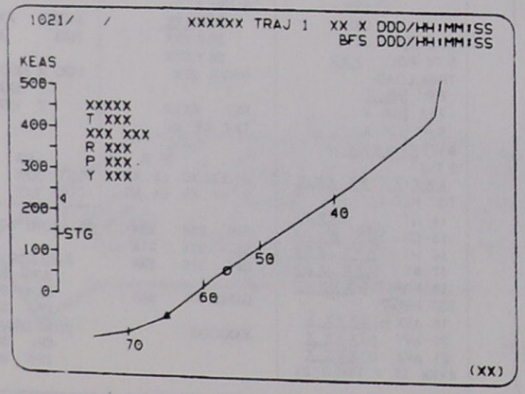

PASS ASCENT TRAJ Display

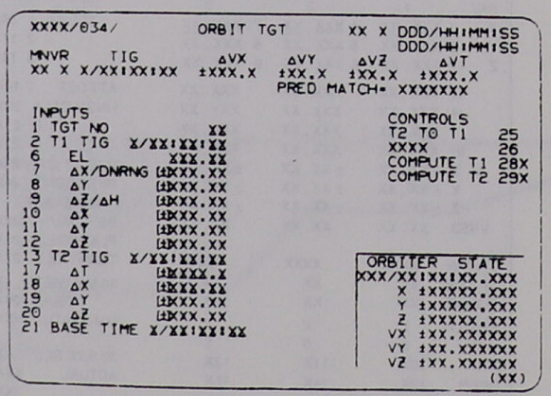

ORBIT TGT Display

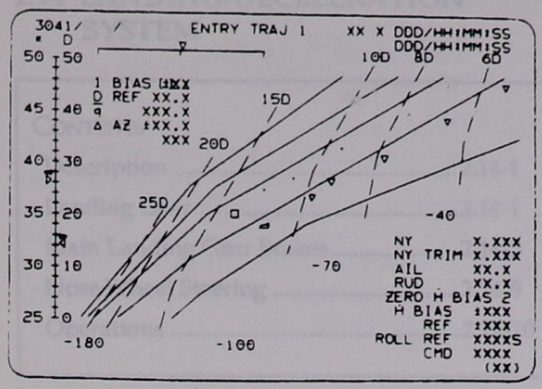

ENTRY TRAJ 1 Display

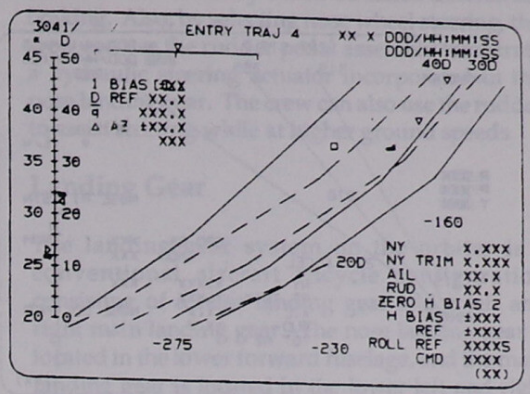

ENTRY TRAJ 4 Display

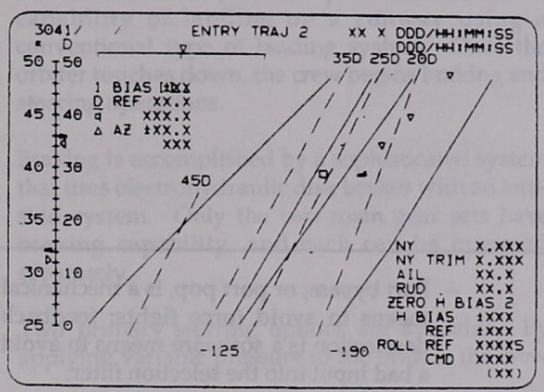

ENTRY TRAJ 2 Display

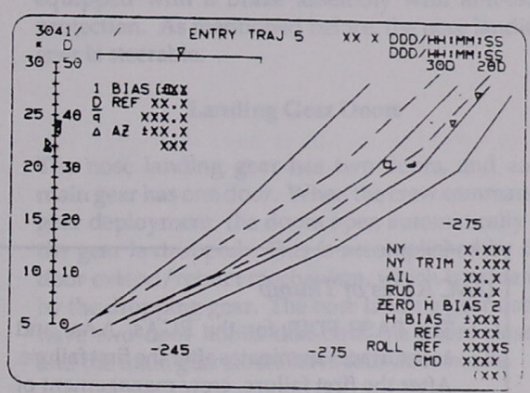

ENTRY TRAJ 5 Display

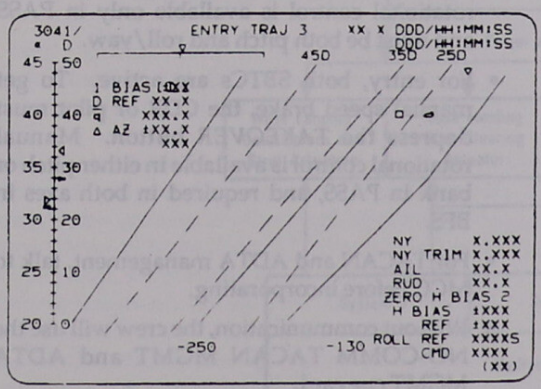

ENTRY TRAJ 3 Display

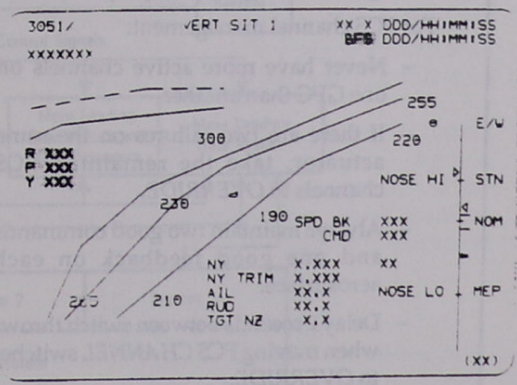

VERT SIT 1 Display

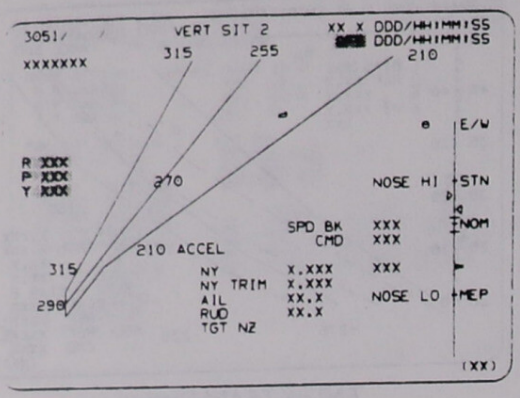

VERT SIT 2 Display

GNC Rules of Thumb

- The PASS FDIR for the RGAs, AAs, and aerosurfaces terminates after the first failure. After the first failure, crew management of the selection filter is required. For the BFS selection filter, crew management is always required. Proper selection filter management is required for proper control.
- For FCS channel management:
  - Never have more active channels on one GPC than another.
  - If there are two failures on the same actuator, take the remaining FCS channels to *OVERRIDE*.
  - Always maintain two good commands and one good feedback on each aerosurface.
  - Delay 2 seconds between switch throws when moving FCS *CHANNEL* switches to *OVERRIDE*.
  - Port bypass, or port pop, is a mechanical means to avoid force fights; feedback deselection is a software means to avoid a bad input into the selection filter.
- For ascent, only the pilot's SBTC is active. To get manual throttles, the pilot must depress the *TAKEOVER* button and then match the commanded throttle setting. Manual rotational control is available only in PASS and must be both pitch and roll/yaw.
- For entry, both SBTCs are active. To get manual speed brake, the CDR or pilot must depress the *TAKEOVER* button. Manual rotational control is available in either pitch or bank in PASS, and required in both axes in BFS.
- For TACAN and ADTA management, talk to MCC before incorporating.
- Without communication, the crew will use the NO-COMM TACAN MGMT and ADTA MGMT cue card.

2.14 LANDING/DECELERATION SYSTEM

CONTENTS

Description 2.14-1
Landing Gear 2.14-1
Main Landing Gear Brakes 2.14-5
Nose Wheel Steering 2.14-9
Operations 2.14-10

Description

The orbiter, unlike previous space vehicles, has the capability of landing on a runway using a conventional type of landing system. Once the orbiter touches down, the crew begins braking and steering operations.

Braking is accomplished by a sophisticated system that uses electrohydraulic disk brakes with an anti-skid system. Only the two main gear sets have braking capability, and each can be operated separately.

Two primary steering options are available. By applying variable pressure to the brakes, the crew can steer the vehicle by a method called differential braking. Also, by selecting nose wheel steering, the crew can use the rudder pedal assembly to operate a hydraulic steering actuator incorporated in the nose landing gear. The crew can also use the rudder to assist steering while at higher ground speeds.

Landing Gear

The landing gear system on the orbiter is a conventional aircraft tricycle configuration consisting of a nose landing gear and a left and right main landing gear. The nose landing gear is located in the lower forward fuselage, and the main landing gear is located in the lower left and right wing area adjacent to the midfuselage. Each landing gear includes a shock strut with two wheel and tire assemblies. Each main landing gear wheel is equipped with a brake assembly with anti-skid protection. As mentioned before, the nose landing gear is steerable.

Landing Gear Doors

The nose landing gear has two doors, and each main gear has one door. When the crew commands gear deployment, the doors open automatically as the gear is dropped. This is accomplished by the door extend/retract mechanism, which is actuated by the dropping gear. The nose landing gear doors have two door hooks that hold the doors closed, and the main gear doors have four door hooks.

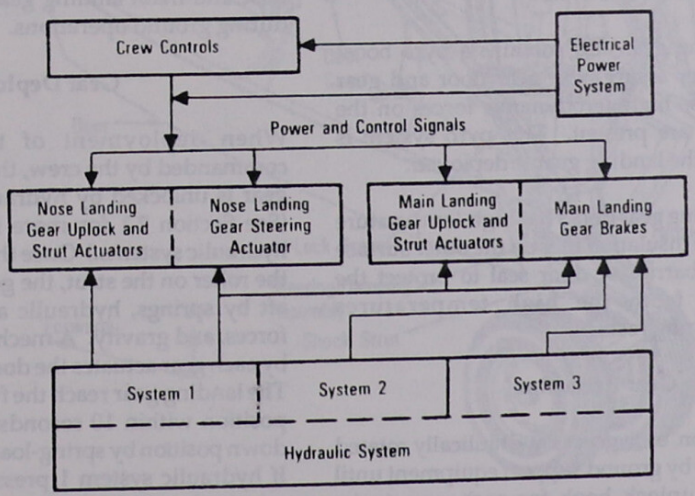

Landing/Deceleration Interfaces

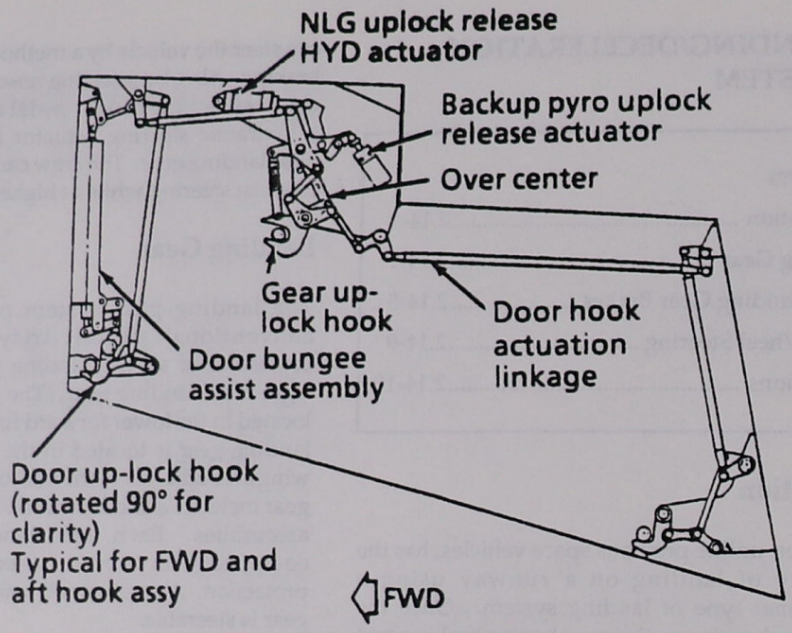

Nose Gear and Door Uplock Mechanism

In addition, the doors have door-assist bungee assemblies. These assemblies exert additional force on the inside of the doors to assist in door deployment to overcome the aerodynamic forces acting against the doors and/or in case the pressure inside the wheel wells is less than the outside pressure. The nose landing gear bungee assist assemblies exert 2,000 pounds of force on the doors; the main landing gear bungee assist assemblies exert approximately 5,000 pounds of force on the doors over the first 2 inches of travel.

The nose landing gear also contains a pyro boost system to further assure nose gear door and gear extension in case high aerodynamic forces on the nose gear door are present. This pyro system is fired each time the landing gear is deployed.

Each of the landing gear doors has high-temperature reusable surface insulation tiles on the outer surface and a thermal barrier or door seal to protect the landing gear from the high temperatures encountered during reentry.

Gear Retraction

During retraction, each gear is hydraulically rotated forward and up by ground support equipment until it engages an uplock hook for each gear in its respective wheel well. The uplock hook locks onto a roller on each strut. A mechanical linkage driven by each landing gear mechanically closes each landing gear door.

The nose landing gear is retracted forward and up into the lower forward fuselage and is enclosed by two doors. The main landing gear is also retracted forward and up into the left and right lower wing area, and each is enclosed with a single door. The nose and main landing gear can be retracted only during ground operations.

Gear Deployment

When deployment of the landing gear is commanded by the crew, the uplock hook for each gear is unlocked by hydraulic system 1 pressure. (See Section 2.1 for more information on orbiter hydraulic systems.) Once the hook is released from the roller on the strut, the gear is driven down and aft by springs, hydraulic actuators, aerodynamic forces, and gravity. A mechanical linkage released by each gear actuates the doors to the open position. The landing gear reach the full-down and extended position within 10 seconds and are locked in the down position by spring-loaded downlock bungees. If hydraulic system 1 pressure is not available to release the uplock hook, a pyrotechnic initiator at

each landing gear uplock hook automatically releases the uplock hook on each gear 1 second after the flight crew has commanded gear down.

The landing gear are usually deployed only after the spacecraft has an indicated airspeed of less than 297 knots equivalent airspeed and an altitude of approximately 300 feet.

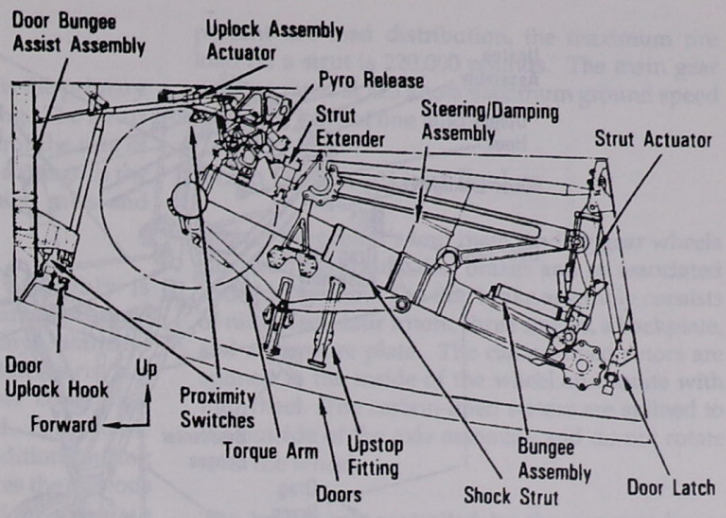

Nose Landing Gear Stowed

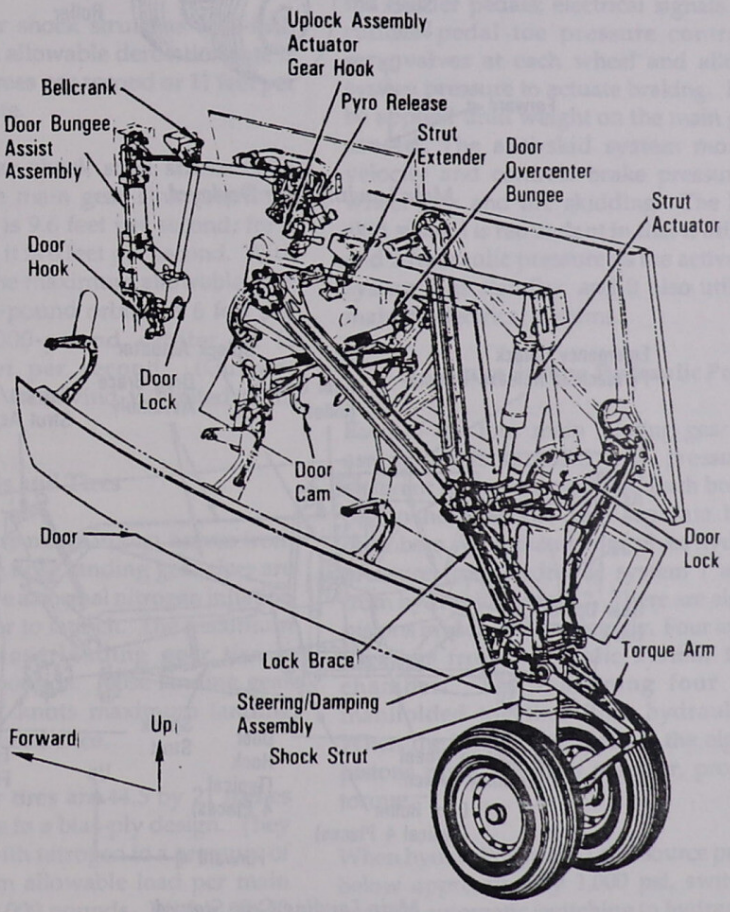

Nose Landing Gear Deployed

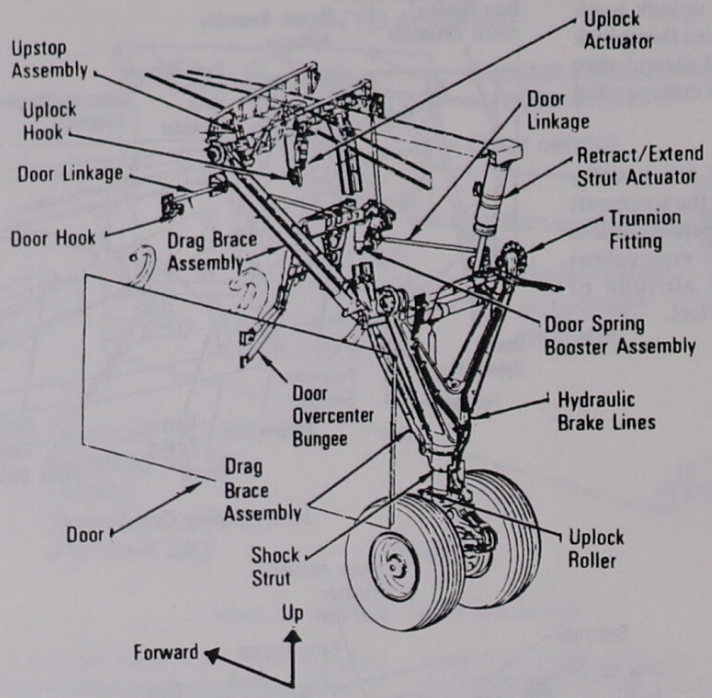

Main Landing Gear Deployed

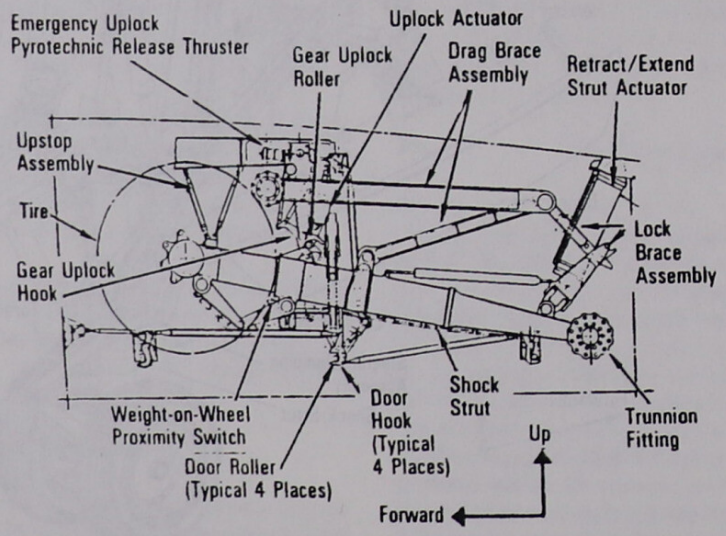

Main Landing Gear Stowed

Shock Struts

The shock strut of each landing gear is the primary source of impact attenuation at landing. The struts have air/oil shock absorbers to control the rate of compression/extension and prevent damage to the vehicle by controlling load application rates and peak values.

Each landing gear shock strut assembly is constructed of high-strength, stress- and corrosion-resistant steel alloys, aluminum alloys, stainless steel, and aluminum bronze. The shock strut is a pneumatic-hydraulic shock absorber containing gaseous nitrogen and hydraulic fluid. Because the shock strut is subjected to zero-g conditions during space flight, a floating piston separates the gaseous nitrogen from the hydraulic fluid to maintain absorption integrity.

The nose landing gear shock strut has a 22-inch stroke. The maximum allowable derotation rate is approximately 9.4 degrees per second or 11 feet per second, vertical sink rate.

The main landing gear shock strut stroke is 16 inches. The allowable main gear sink rate for a 212,000-pound orbiter is 9.6 feet per second; for a 240,000-pound orbiter, it is 6 feet per second. With a 20-knot crosswind, the maximum allowable gear sink rate for a 212,000-pound orbiter is 6 feet per second; for a 240,000-pound orbiter, it is approximately 5 feet per second. (Current maximum operational crosswind is limited to 15 knots.)

Wheels and Tires

Landing gear wheels are made in two halves from forged aluminum. The nose landing gear tires are 32 by 8.8 inches and have a normal nitrogen inflation pressure of 350 psi prior to launch. The maximum allowable load per nose landing gear tire is approximately 45,000 pounds. Nose landing gear tires are rated for 217 knots maximum landing speed. They may be reused once.

The main landing gear tires are 44.5 by 21 inches and have 16 cord layers in a bias-ply design. They are normally inflated with nitrogen to a pressure of 370 psi. The maximum allowable load per main landing gear tire is 132,000 pounds. With a 60/40 percent tire load distribution, the maximum tire load on a strut is 220,000 pounds. The main gear tires are rated at 225 knots maximum ground speed and have a life of one landing.

Main Landing Gear Brakes

Each of the orbiter's four main landing gear wheels has electrohydraulic disc brakes and an associated anti-skid system. The disc brake assembly consists of nine discs, four rotors, three stators, a backplate, and a pressure plate. The carbon-lined rotors are splined to the inside of the wheel and rotate with the wheel. The carbon-lined stators are splined to the outside of the axle assembly and do not rotate with the wheel.

The brakes are controlled by the commander or pilot applying toe pressure to the upper portion of the rudder pedals; electrical signals produced by rudder pedal toe pressure control hydraulic servovalves at each wheel and allow hydraulic system pressure to actuate braking. Brakes cannot be applied until weight on the main gear has been sensed. The anti-skid system monitors wheel velocity and controls brake pressure to prevent wheel lock and tire skidding. The braking/anti-skid system is redundant in that it utilizes system 1 and 2 hydraulic pressure as the active system with system 3 as standby, and it also utilizes all three main dc electrical systems.

Brake System Hydraulic Power

Each of the four main landing gear wheel brake assemblies is supplied with pressure from two different hydraulic systems. Each brake hydraulic piston housing has two separate brake supply chambers. One chamber receives hydraulic source pressure from hydraulic system 1 and the other from hydraulic system 2. There are eight hydraulic pistons in each brake assembly. Four are manifolded together from hydraulic system 1 in a brake chamber. The remaining four pistons are manifolded together from hydraulic system 2. When the brakes are applied, the eight hydraulic pistons press the discs together, providing brake torque.

When hydraulic system 1 or 2 source pressure drops below approximately 1,000 psi, switching valves provide automatic switching to hydraulic system 3.

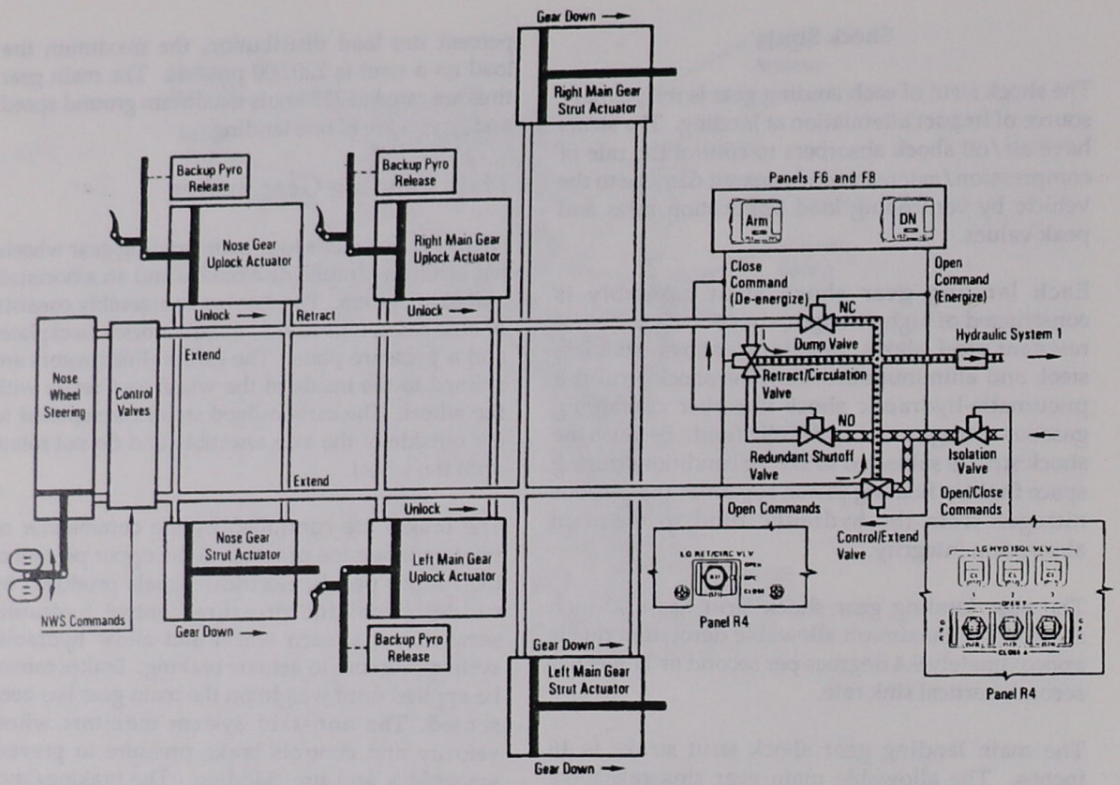

Landing Gear Hydraulics

Loss of hydraulic system 1, 2, or both would have no effect on braking capability, because standby system 3 would automatically replace either system. Loss of hydraulic system 3 and either 1 or 2 would cause the loss of half of the braking power on each wheel, and additional braking distance would be required.

The landing gear isolation valve in hydraulic systems 1, 2, and 3 must be open to allow hydraulic pressure to the brakes. The 3,000 psi hydraulic pressure is reduced by a regulator in each of the brake hydraulic systems to 2,000 psig.

Anti-Skid

The anti-skid portion of the brake system provides optimum braking by preventing tire skid or wheel lock and subsequent tire damage.

Each main landing gear wheel has two speed sensors that supply wheel rotational velocity information to the skid control circuits in the brake/skid control boxes. The velocity of each wheel is continuously compared to the average wheel velocity of all four wheels. Whenever the wheel velocity of one wheel is 60 percent below the average velocity of the four wheels, skid control removes brake pressure from the slow wheel until the velocity of that wheel increases to an acceptable range.

The brake system contains eight brake/skid control valves. Each valve controls the hydraulic brake pressure to one of the brake chambers. The brake/skid control valves contain a brake coil and a skid coil. The brake coil allows hydraulic pressure to enter the brake chambers. The skid coil, when energized by the skid control circuit, provides reverse polarity to the brake coil, preventing the brake coil from allowing brake pressure to the brake chamber.

Anti-skid control is automatically disabled below approximately 10 to 15 knots to prevent loss of braking for maneuvering and/or coming to a complete stop.

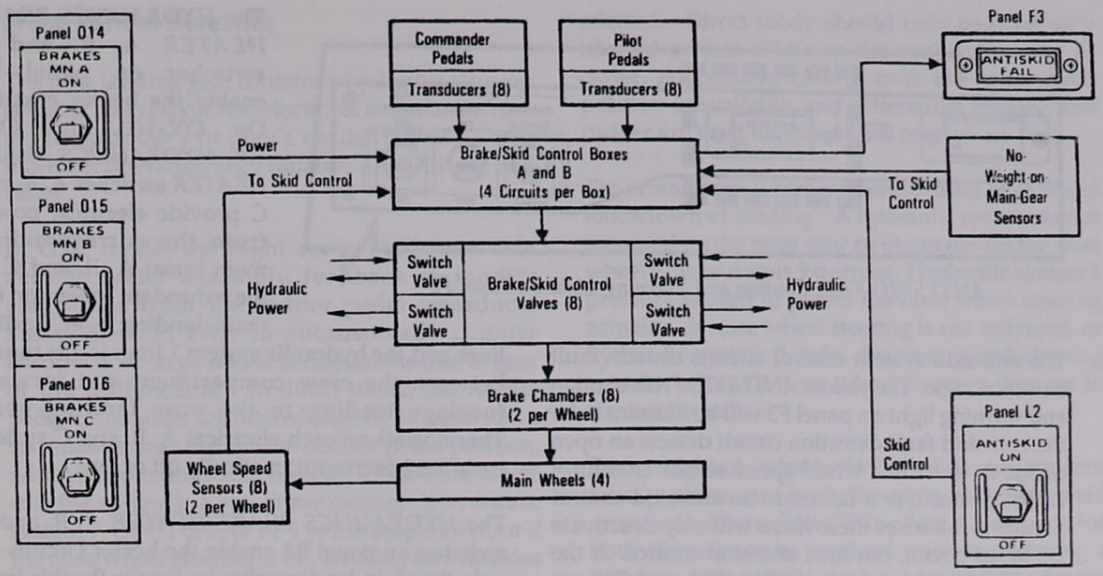

Brake/Skid Control System Overview

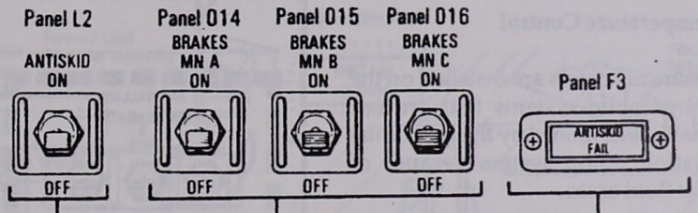

Anti-skid Switch		Brake Power Switches		Anti-skid Failure*		Anti-skid ** Fail Light	
On	Off	On	Off	Yes	No	On	Off
			●				●
	●	●				●	
●		●			●		●
●		●		●		●	

*Anti-skid fault detection circuits detect any of the following failures:
- Open or short in a wheel speed sensor circuit
- Open or short in a skid control servovalve circuit
- Failure in an anti-skid control circuit

**Applies only if brake power switches MN B, MN C or both are activated.

Note: A failure will deactivate only the failed circuit and not total anti-skid control.

Anti-Skid Fail Light Status

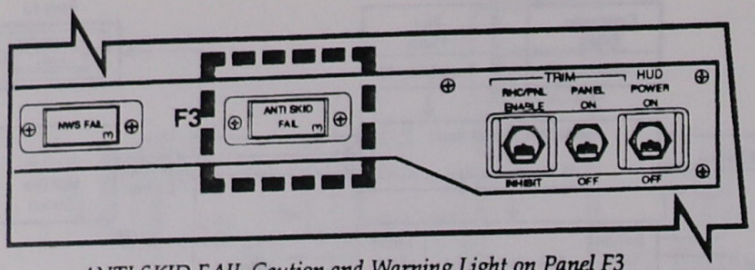

ANTI SKID FAIL Caution and Warning Light on Panel F3

The anti-skid system control circuits contain fault detection logic. The yellow *ANTI SKID FAIL* caution and warning light on panel F3 will be illuminated if the anti-skid fault detection circuit detects an open circuit or short in a wheel speed sensor or control valve servocoil, or a failure in an anti-skid control circuit. A failure of these items will only deactivate the failed circuit, not total anti-skid control. If the *BRAKES* switches on panels O14, O15, and O16 are *ON*, and the *ANTI SKID* switch on panel L2 is *OFF*, the *ANTI SKID FAIL* caution and warning light will also be illuminated.

Temperature Control

Insulation and electrical heaters are installed on the portions of the hydraulic systems that are not adequately thermally conditioned by the individual hydraulic circulation pump system because of stagnant hydraulic fluid areas.

Redundant electrical heaters are installed on the main landing hydraulic flexible lines located on the back side of each main landing gear strut between the brake module and brakes. These heaters are required because the hydraulic fluid systems are dead-ended, and fluid cannot be circulated with the circulation pumps. In addition, on OV-103 and OV-104, the hydraulic system 1 lines to the nose landing gear are located in a tunnel between the crew compartment and forward fuselage. The passive thermal control systems on OV-103 and OV-104 are attached to the crew compartment, which leaves the hydraulic system 1 lines to the nose landing gear exposed to environmental temperatures, thus requiring electrical heaters on the lines in the tunnel. Since the passive thermal control system on OV-102 is attached to the inner portion of the forward fuselage rather than the crew compartment, no heaters are required on the hydraulic system 1 lines to the nose landing gear on OV-102.

The *HYDRAULICS BRAKE HEATER A, B,* and *C* switches on panel R4 enable the heater circuits. On OV-103 and OV-104, *HYDRAULICS BRAKE HEATER* switches *A, B,* and *C* provide electrical power from the corresponding main buses A, B, and C to the redundant heaters on the main landing gear flexible lines and the hydraulic system 1 lines in the tunnel between the crew compartment and forward fuselage leading to the nose landing gear. Thermostats on each electrical A, B, and C system cycle the heaters automatically off or on.

The *HYDRAULICS BRAKE HEATER A, B,* and *C* switches on panel R4 enable the heater circuits on only the main landing gear hydraulic flexible lines on OV-102.

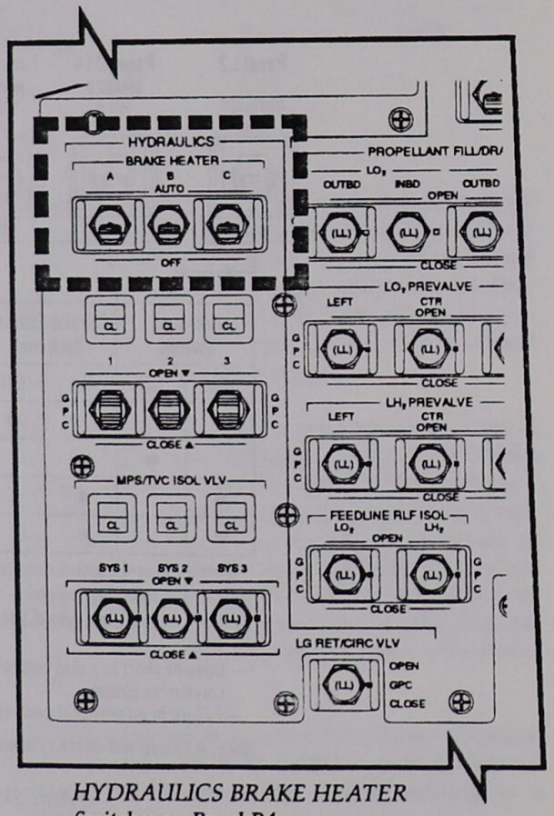

HYDRAULICS BRAKE HEATER Switches on Panel R4

Nose Wheel Steering

The nose landing gear contains a hydraulic steering actuator that responds to electronic commands from the commander's or pilot's rudder pedals. Three modes of operation are available: GPC, direct, and caster.

In GPC mode, the flight control software uses accelerometer assembly feedback to modify commands from the rudder pedal transducer assemblies (RPTAs) to automatically counter hardovers or large lateral accelerations due to gear or tire malfunctions. In direct mode, the rudder pedal commands are altered slightly to desensitize commands near the neutral rudder pedal position, with all commands sent directly to the nose wheel steering system in a non-linear manner. If hydraulic system 1, GPC 1 or 2, or FF 1 or 2 is inoperative, or if the nose wheel steering is off, steering downmodes to the caster mode. If GPC 1/FF 1 is available, but GPC 2/FF 2 is failed, direct mode is still available if selected. Direct mode should only be used on a lakebed surface if known tire problems exist. In caster, no positive control over the nose wheel position is available, and differential braking and rudder are used for directional control.

The orbiter nose wheel is steerable after nose wheel touchdown at landing. A hydraulic servoactuator mounted on the nose gear strut can deflect the nose wheel plus or minus 9 degrees. Hydraulic system 1 pressure is used to power the nose wheel steering actuator. If nose wheel steering is not activated, or hydraulic system 1 fails, the nose wheel steering actuator acts as a nose wheel shimmy damper in the caster mode.

Two weight-on-wheels (WOW) discretes are sent from position sensors in the main gear after main gear touchdown. The GPCs allow 3.2 seconds for both discretes to be received prior to declaring a dilemma that would prohibit activation of nose wheel steering.

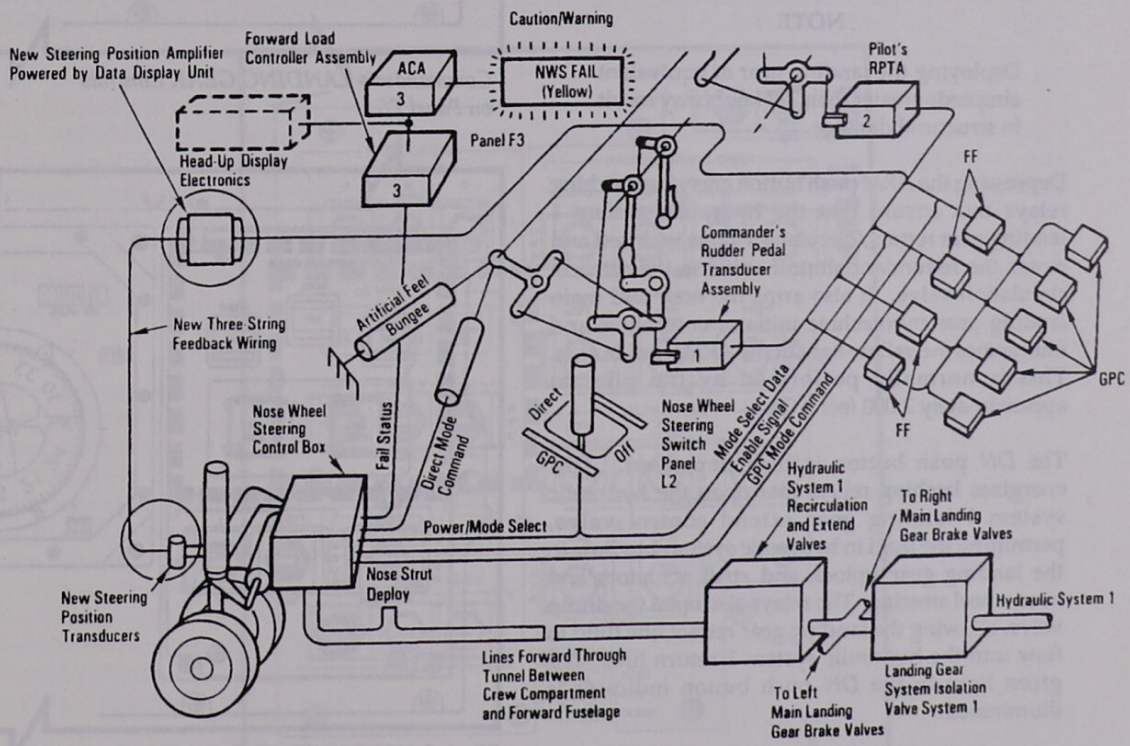

Nose Wheel Steering System Overview

Two weight-on-nose-gear (WONG) discretes are sent from position sensors on the nose strut after nose gear touchdown. The sensors are separated by about 1 inch and do not close at the same time. The GPCs allow 3.2 seconds for both discretes to be received after nose gear touchdown prior to declaring a dilemma that would prohibit activation of nose wheel steering. If a WOW or WONG dilemma occurs, the pilot must manually bypass this dilemma by pressing either the *ET* or *SRB SEP* push button on panel C3, after selecting the *MAN/AUTO* position.

Operations

Landing Gear

Landing gear deployment is initiated when the commander (on panel F6) or pilot (on panel F8) depresses the guarded *LANDING GEAR ARM* push button and then the guarded *DN* push button at least 15 seconds before predicted touchdown at a speed no greater than 297 knots equivalent airspeed at approximately 300 feet above ground level (AGL).

NOTE

Deploying the landing gear at equivalent airspeeds greater than 297 knots may result in structural damage.

Depressing the *ARM* push button energizes latching relays that ensure that the hydraulic system 1 landing gear retract/circulation valve is closed and closes the redundant shutoff valve to the retract/circulation valve. It also arms the nose and main landing gear pyrotechnic initiator controllers and illuminates the yellow light in the *ARM* push button. This is normally performed by the pilot at approximately 2,000 feet AGL.

The *DN* push button is then depressed. This energizes latching relays that open the hydraulic system 1 landing gear extend control valve, permitting the fluid in hydraulic system 1 to flow to the landing gear uplock and strut actuators and nose wheel steering. The relays also open the dump valve, allowing the landing gear retract line fluid to flow into the hydraulic system 1 return line. The green light in the *DN* push button indicator is illuminated.

The proximity switches on the nose and main landing gear doors and struts provide electrical signals to control the *LANDING GEAR NOSE, LEFT,* and *RIGHT* indicators on panels F6 and F8. The output signals of the landing gear and door uplock

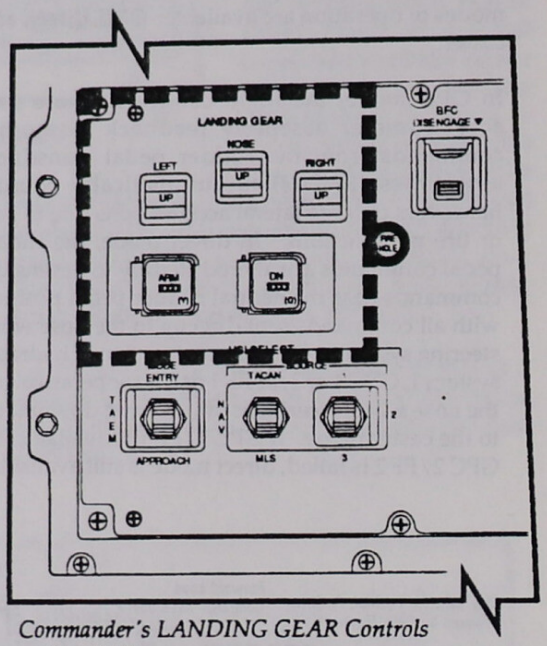

Commander's LANDING GEAR Controls on Panel F6

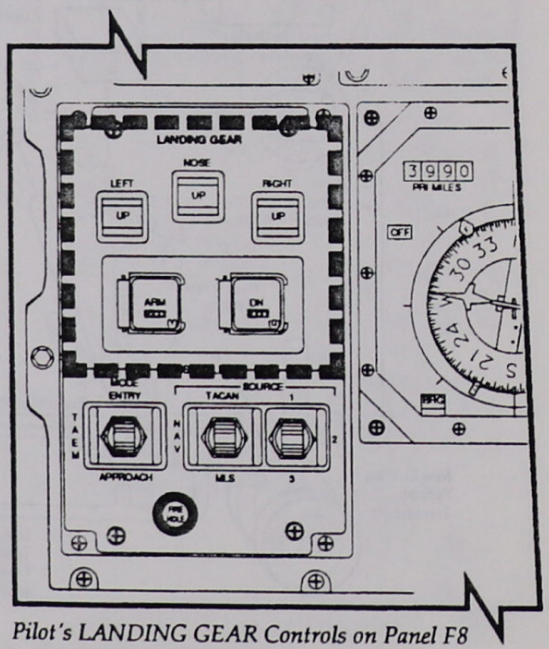

Pilot's LANDING GEAR Controls on Panel F8

switches drive the landing gear *UP* position indicators and the backup pyrotechnic release system. The output signals of the landing gear downlock switches drive the landing gear *DN* position indicators. The landing gear indicators are barberpole when the gear is in transit.

The left and right main landing gear weight-on-wheels switches produce output signals to the guidance, navigation, and control software to reconfigure the flight control system for landing and rollout gains.

The two WONG signals, along with WOW and theta (pitch angle) less than 0 degrees, allow the GNC software to issue a nose wheel steering enable signal. This signal is then sent to the steering control box to enable nose wheel steering.

Six gear proximity switches are signal conditioned by the landing gear proximity sensor electronics box 1, located in avionics bay 1. Six additional gear proximity switches are signal conditioned by the landing gear proximity sensor electronics box 2, located in avionics bay 2. All WOW proximity switches are redundant through two signal conditioners.

Hydraulic system 1 source pressure is routed to the nose and main landing gear uplock actuators, which releases the nose and main landing gear and door uplock hooks. As the uplock hooks are released, the gear begins its deployment. During gear extension, a camming action opens the landing gear doors. The landing gear free falls into the extended position, assisted by the strut actuators and airstream in the deployment. The hydraulic strut actuator incorporates a hydraulic fluid flowthrough orifice (snubber) to control the rate of landing gear extension and thereby prevent damage to the gear's downlock linkages.

The *LG HYD ISOL VLV 1, 2,* and 3 switches on panel R4 control the corresponding landing gear isolation valve in hydraulic systems 1, 2, and 3. When the switch is positioned to *CLOSE*, hydraulic

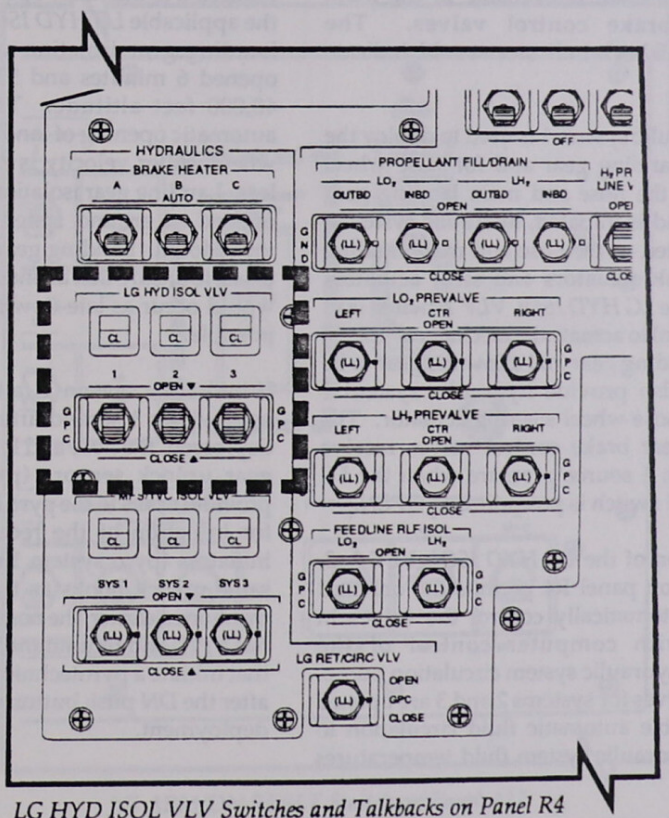

LG HYD ISOL VLV Switches and Talkbacks on Panel R4

system 1 is isolated from the nose and main landing gear deployment uplock hook actuators and strut actuators, nose wheel steering actuator, and main landing gear brake control valves. The talkback indicator above the switch would indicate *CL*. The landing gear isolation valves cannot be opened or closed with pressures less than approximately 100 psi. When the switch is positioned to *OPEN*, it allows hydraulic system 1 source pressure to the main landing brake control valves and to the normally closed extend valve. The normally closed extend valve is not energized until a *LANDING GEAR DN* command is initiated by the commander or pilot on panel F6 or panel F8. The talkback indicator would indicate *OP*. The *LG HYD ISOL VLV 1* switch is left in the *CLOSE* position during the mission to prevent inadvertent gear deployment.

The *LG HYD ISOL VLV 2* and 3 switches on panel R4 positioned to *CLOSE* isolate the corresponding hydraulic system from only the main landing gear brake control valves. The adjacent talkback indicator would indicate *CL*. When switches 2 and 3 are positioned to *OPEN*, the corresponding hydraulic system source pressure is available to the main landing gear brake control valves. The corresponding talkback indicator would indicate *OP*.

Thus, only hydraulic system 1 is used to deploy the nose and main landing gear and for nose wheel steering. When the nose and main landing gear "down" command is initiated, hydraulic system 1 pressure is directed to the nose and main landing gear uplock hook actuators and strut actuators (provided that the *LG HYD ISOL VLV 1* switch is in the *OPEN* position) to actuate the mechanical uplock hook for each landing gear and allow the gear to be deployed and also provide hydraulic system 1 pressure to the nose wheel steering actuator. The main landing gear brake control valves receive hydraulic system 1 source pressure when the *LG HYD ISOL VLV 1* switch is positioned to *OPEN*.

The *GPC* position of the *LG HYD ISOL VLV 1*, 2, and 3 switches on panel R4 permits the onboard computer to automatically control the valves in conjunction with computer control of the corresponding hydraulic system circulation pump. The isolation valves for systems 2 and 3 are opened on orbit to enable automatic fluid circulation to maintain the hydraulic system fluid temperatures at suitable levels. (The *LG HYD ISOL VLV 1* switch is left closed to prevent inadvertent gear deployment.)

The normally open hydraulic system 1 redundant shutoff valve is a backup to the retract/circulation valve to prevent hydraulic pressure from being directed to the retract side of the nose and main landing gear uplock hook actuators and strut actuators if the retract/circulation valve fails to open during nose and main landing gear deployment.

The normally closed hydraulic system 1 dump valve is energized open to allow hydraulic system 1 fluid to return from the nose and main landing gear areas when deployment of the landing gear is commanded by the flight crew.

Prior to entry, the *LG HYD ISOL VLV 1*, 2, and 3 switches are positioned to *GPC*. At 19,000 feet per second, the landing gear isolation valve automatic opening sequence begins under GNC software control. If the landing gear isolation valve is not opened automatically, the flight crew will be requested to manually open the valve by positioning the applicable *LG HYD ISOL VLV* switch to *OPEN*. Landing gear isolation valve 2 is automatically opened 6 minutes and 33 seconds later at about 40,000 feet altitude. This is followed by the automatic opening of landing gear isolation valve 1 when orbiter velocity is at 800 feet per second or less. Landing gear isolation valve 3 is automatically opened at ground speed enable after nose gear touchdown. Landing gear isolation valve 1 is next to last to ensure that an inadvertent gear deployment would occur as late (low altitude and airspeed) as possible.

If hydraulic system 1 fails to release the landing gear within 1 second after the *DN* push button is depressed, the nose and left and right main landing gear uplock sensors (proximity switches) will provide inputs to the pyro initiator controllers (PICs) for initiation of the redundant NASA standard initiators (pyro system 1 and 2). They release the same uplock hooks as the hydraulic system. As mentioned earlier, the nose landing gear, in addition, has a PIC and redundant NASA standard initiators that initiate a pyrotechnic power thruster 2 seconds after the *DN* push button is depressed to assist gear deployment.

The landing gear drag brace overcenter lock and spring-loaded bungee lock the nose and main landing gear in the down position.

Ground Reset

Landing gear reset is primarily a post landing function, which will be performed by the crew.

The *LG ARM/DN RESET* switch on panel A12 positioned to *RESET* unlatches the relays that were latched during landing gear deployment by the *LANDING GEAR ARM* and *DN* push button indicators. The primary function of this procedure is to remove power to the PIC circuits that are still charged as a backup landing gear deploy method. The *RESET* position also will extinguish the yellow light in the *ARM* push button indicator and the green light in the *DN* push button.

Brake Controls

The *BRAKES MN A, MN B,* and *MN C* switches are located on panels O14, O15, and O16. These switches allow electrical power to brake/anti-skid control boxes A and B. The *ANTISKID* switch located on panel L2 provides electrical power for enabling the anti-skid portion of the braking system boxes A and B. The *BRAKES MN A, MN B,* and *MN C* switches are positioned to *ON* to supply electrical power to brake boxes A and B, and to *OFF* to remove electrical power. The *ANTISKID* switch is positioned to *ON* to enable the anti-skid system, and *OFF* to disable the system.

When weight is sensed on the main landing gear, the brake/anti-skid boxes A and B are enabled, permitting the main landing gear brakes to become operational.

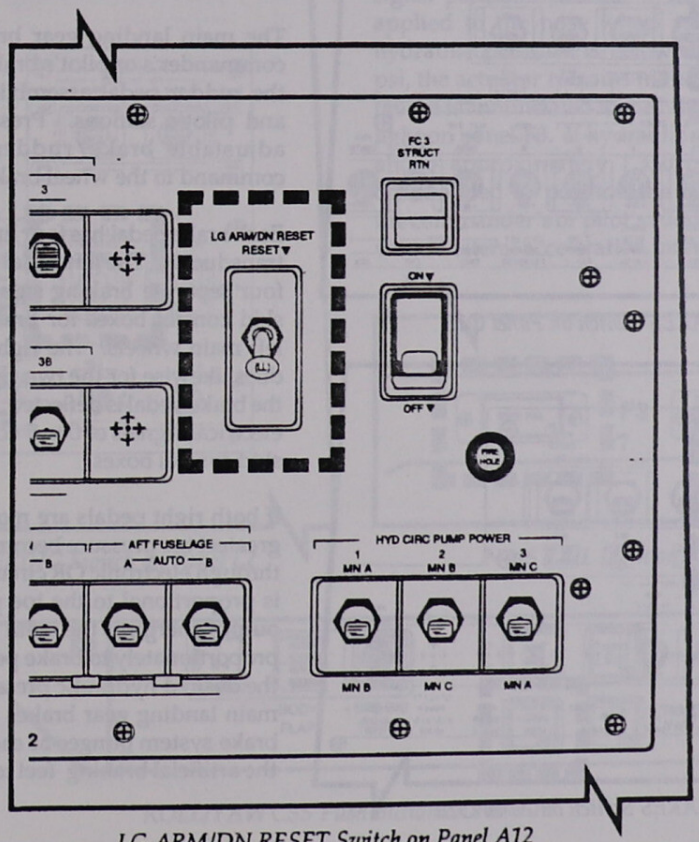

LG ARM/DN RESET Switch on Panel A12

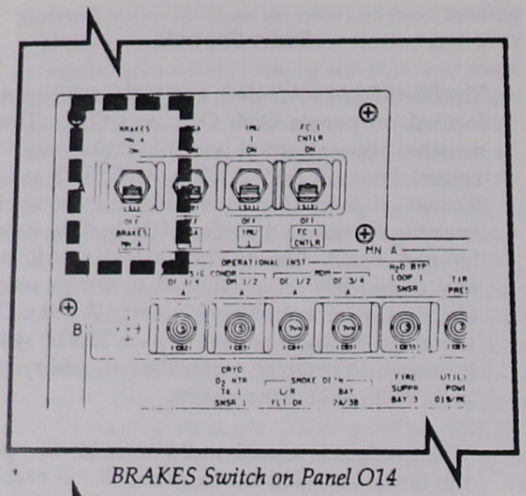

BRAKES Switch on Panel O14

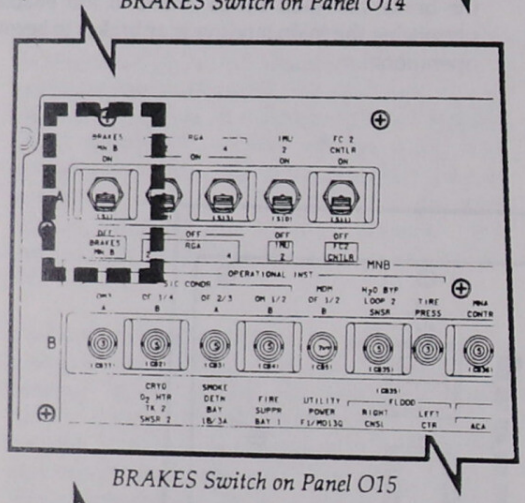

BRAKES Switch on Panel O15

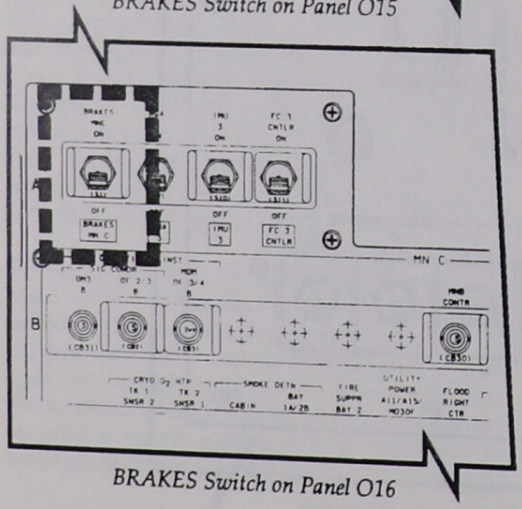

BRAKES Switch on Panel O16

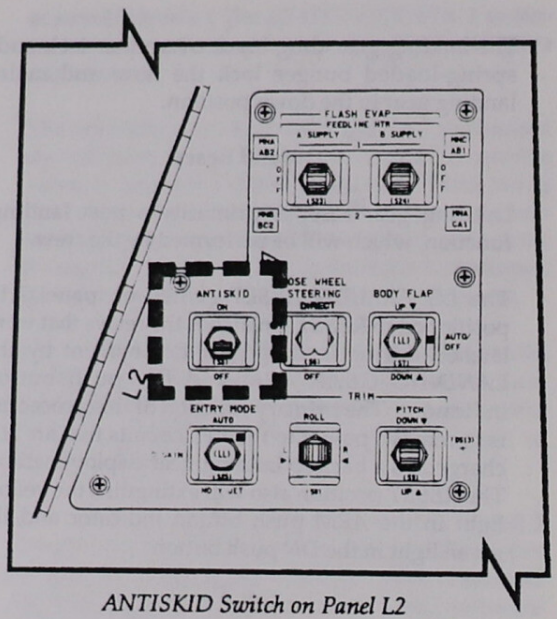

ANTISKID Switch on Panel L2

The main landing gear brakes controlled by the commander's or pilot's brake pedals are located on the rudder pedal assemblies at the commander's and pilot's stations. Pressure on the toe of the adjustable brake/rudder pedals results in a command to the wheel braking system.

Each brake pedal has four linear variable differential transducers. The left pedal transducer unit outputs four separate braking signals through the brake/skid control boxes for braking control of the two left main wheels. The right pedal transducer unit does likewise for the two right main wheels. When the brake pedal is deflected, the transducers transmit electrical signals of 0 to 5 volts dc to the brake/anti-skid control boxes.

If both right pedals are moved, the pedal with the greatest toe pressure becomes the controlling pedal through electronic OR circuits. The electrical signal is proportional to the toe pressure. The electrical output energizes the main landing gear brake coils proportionately to brake pedal deflection, allowing the desired hydraulic pressure to be directed to the main landing gear brakes for braking action. The brake system bungee at each brake pedal provides the artificial braking feel to the crew member.

Nose Wheel Steering

GPC Mode

The *NOSE WHEEL STEERING* switch on panel L2 positioned to *GPC* enables the nose wheel steering solenoid control valves, which supplies hydraulic system 1 pressure to the nose wheel steering servovalves. In addition to the *GPC* mode selection of the switch, the *FLIGHT CNTLR POWER* switch on panel F8 must be positioned to *ON*, and the flight control system *ROLL/YAW CSS* push button on panel F2 or F4 must be depressed to enable GPC mode steering. When either push button is depressed, a white light illuminates the push button.

When the commander or pilot makes an input to the rudder pedals in the *GPC* mode, the rudder pedal command position is appropriately scaled within the GPC's software and transmitted to a summing network, along with lateral accelerometer inputs from within the flight control system. The accelerometer inputs are utilized to prevent any sudden orbiter lateral deviation. From this summing network, a nose wheel steering command is sent to a comparison network, as well as to the steering servo system.

Steering position transducers on the nose wheel strut receive redundant electrical excitation from the steering position amplifier, which receives redundant electrical power from data display unit 2.

Each of the three transducers transmits nose wheel position feedback to a redundancy management mid-value-select software. It then transmits a nose wheel position signal to the comparison network. The orbiter nose wheel commanded and actual positions are compared for position error and for rates to reduce any error. Absence of an error condition will allow nose wheel steering to be enabled after WOW, WONG, and theta less than 0 degrees are sensed in the software. The enable signal permits hydraulic system 1 pressure to be applied to the nose wheel steering actuator. If hydraulic pressure is below approximately 1,350 psi, the actuator remains in the caster mode, and a failure is annunciated to the *NWS FAIL* C/W yellow light on panel F3. If hydraulic system 1 pressure is above approximately 1,350 psi, the actuator is commanded to position the nose wheel utilizing the commander's or pilot's rudder pedal inputs and vehicle lateral acceleration information.

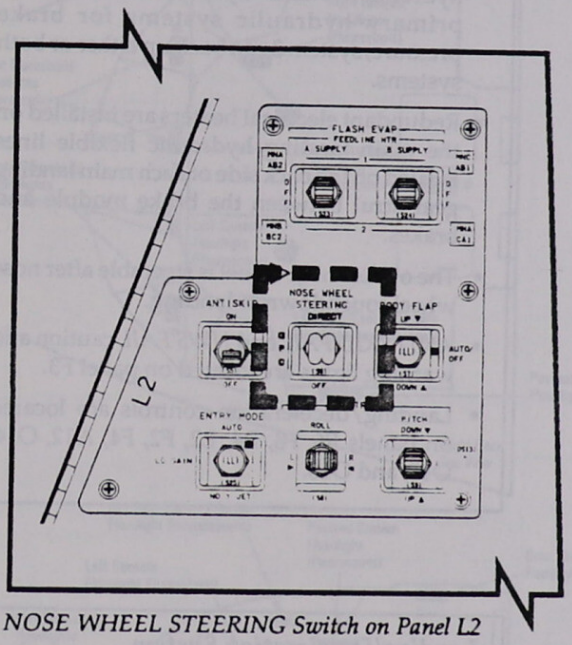

NOSE WHEEL STEERING Switch on Panel L2

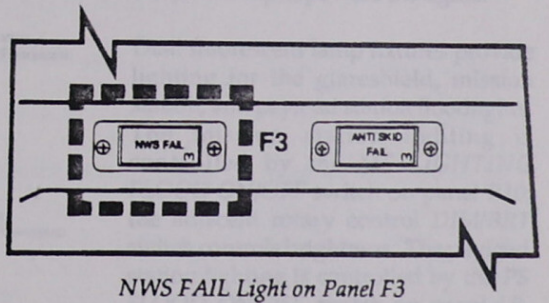

NWS FAIL Light on Panel F3

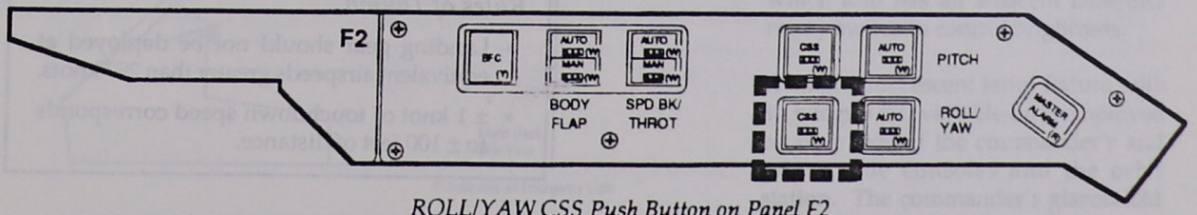

ROLL/YAW CSS Push Button on Panel F2

Direct Mode

When the *NOSE WHEEL STEERING* switch on panel L2 is positioned to *DIRECT*, the nose wheel steering solenoid control is enabled after weight is sensed on the nose gear. This supplies hydraulic system 1 supply pressure to the nose wheel steering servo system.

When the commander or pilot positions the rudder pedal in the direct mode, the rudder pedal's command position is shaped to provide a less sensitive rudder pedal command in the midrange and provides steering commands directly to the nose wheel steering servoactuator, bypassing the GPC software altogether.

Landing/Deceleration System Summary Data

- The orbiter has the capability of landing on a runway using a conventional type of landing gear system. Once the orbiter touches down, the crew begins braking and steering operations.
- The landing gear consists of a nose landing gear and a left and right main landing gear. Each landing gear includes a shock strut with two wheel and tire assemblies.
- The nose wheels are co-rotating through a common axle, whereas the main gear wheels rotate independently.
- Each of the four main landing gear wheels has electrohydraulic brakes and an antiskid system. Each gear wheel brake assembly is supplied with pressure from two different hydraulic systems. Systems 1 and 2 are the primary hydraulic systems for brake pressure; system 3 can back up either or both systems.
- Redundant electrical heaters are installed on the main landing hydraulic flexible lines located on the back side of each main landing gear strut between the brake module and brakes.
- The orbiter nose wheel is steerable after nose wheel touchdown at landing.
- *ANTI SKID FAIL* and *NWS FAIL* caution and warning lights are located on panel F3.
- Landing/deceleration controls are located on panels F6, F8, R4, L2, F2, F4, A12, O14, O15, and O16.

Landing/Deceleration System Rules of Thumb

- Landing gear should not be deployed at equivalent airspeeds greater than 297 knots.
- ± 1 knot of touchdown speed corresponds to ± 100 feet of distance.

2.15 LIGHTING SYSTEM

CONTENTS

Description 2.15-1
Interior Lighting 2.15-1
Exterior Lighting 2.15-12

Description

The orbiter lighting system provides both interior and exterior lighting. The interior lighting provides illumination for display and control visibility and for general crew station and crew equipment operations. Exterior lighting provides illumination for payload bay door operations, extravehicular activity, remote manipulator system operations, and stationkeeping and docking. Interior lighting consists of floodlights, panel lights, instrument lights, numeric lights, and annunciator lights. Exterior lighting consists of floodlights and spotlights.

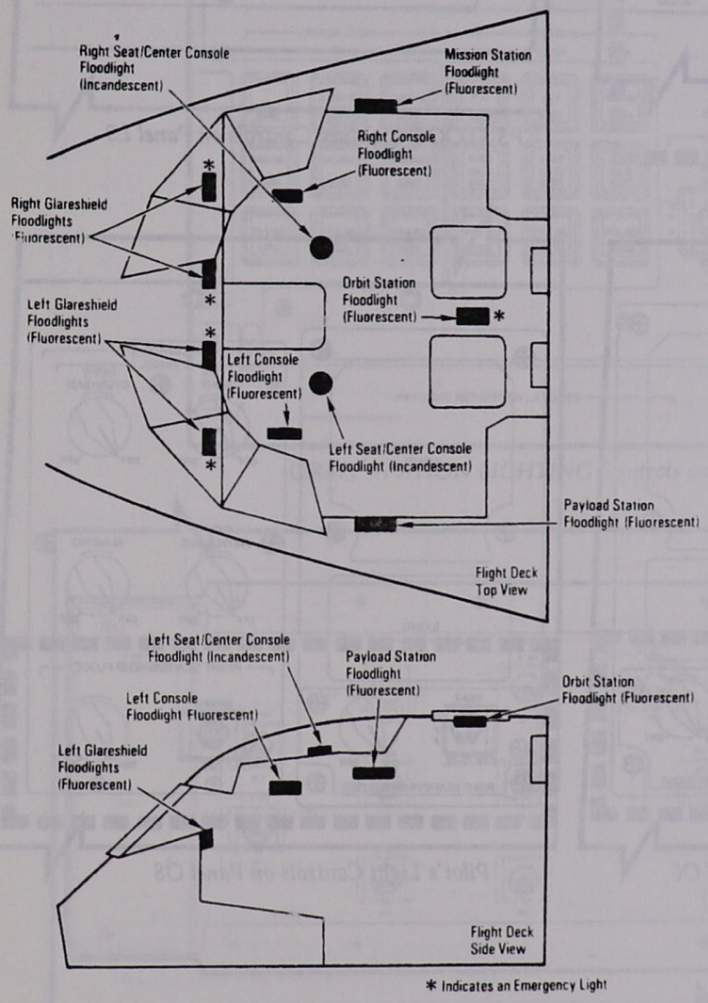

Floodlight Locations–Flight Deck Forward and Aft

Interior Lighting

Interior floodlights provide general illumination throughout the crew cabin and allow the flight crew to function within the flight deck, middeck, airlock, and tunnel adapter (if installed). Circuit breakers, switches, and variable controls are used to operate the lights. Both fluorescent and incandescent lamps are used.

Emergency lighting is provided by selected fixtures that are powered via a separate power input from an essential bus. Existing floodlights are used, but a separate input powers the lights.

Dual fluorescent lamp fixtures provide lighting for the glareshield, mission station, and payload station floodlights. The mission station lighting is controlled by the *MS LIGHTING FLOOD ON/OFF* switch on panel R10; the adjacent rotary control *DIM/BRT* switch controls brightness. The payload station lighting is controlled by the *PS FLOOD ON/OFF* switch on panel L9, which also has an adjacent *DIM/BRT* rotary switch to control brightness.

A single fluorescent lamp fixture with an integral off/variable-on is employed on each side of the commander's and pilot's side consoles and the orbit station. The commander's glareshield light, which consists of left inboard (dual

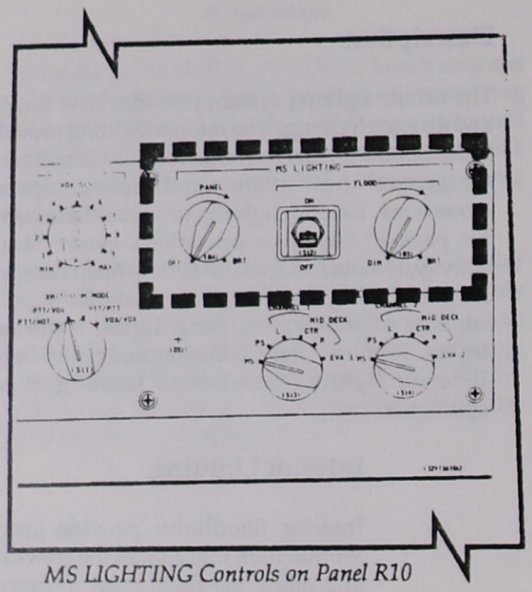

MS LIGHTING Controls on Panel R10

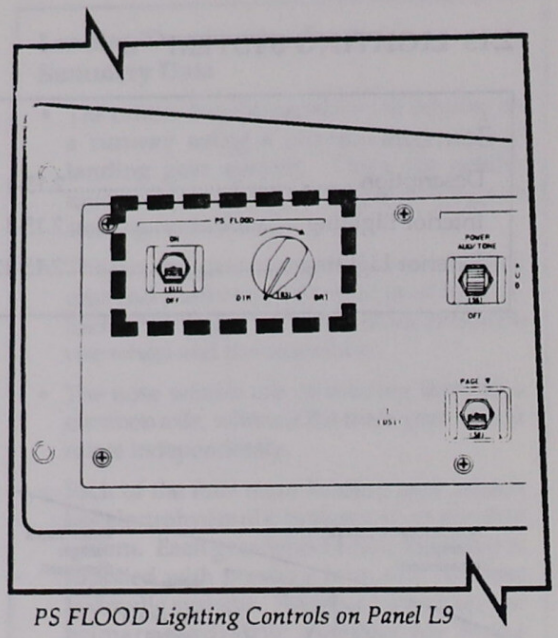

PS FLOOD Lighting Controls on Panel L9

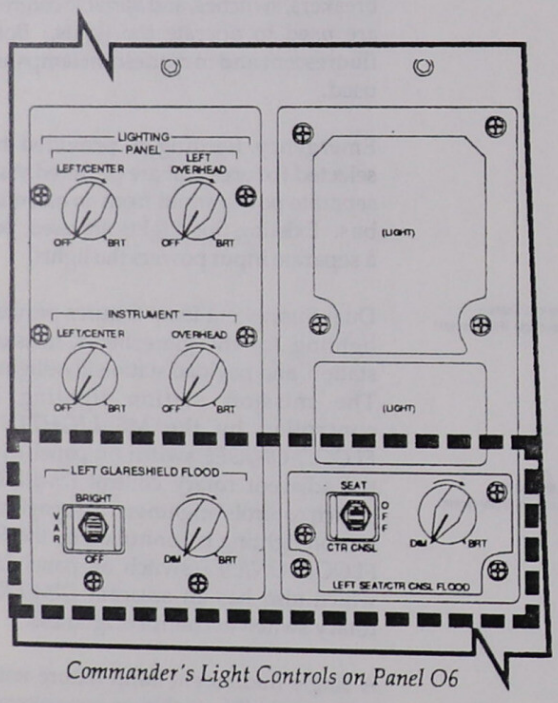

Commander's Light Controls on Panel O6

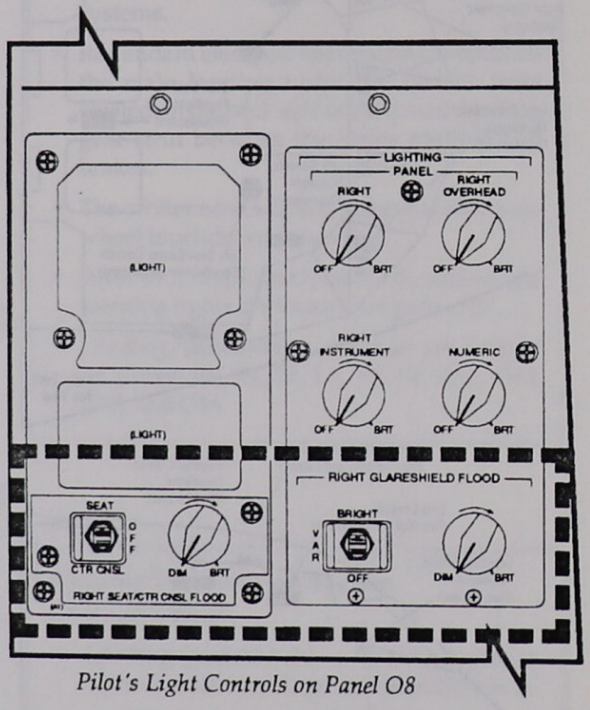

Pilot's Light Controls on Panel O8

lamp) and left outboard (dual lamp), is controlled by the *LIGHTING LEFT GLARESHIELD FLOOD BRIGHT, VAR, OFF* switch and a *DIM, BRT* rotary control on panel O6. (The *DIM, BRT* rotary control operates in conjunction with the *VAR* position.) The pilot's glareshield light functions the same as the commander's, except the controls (*LIGHTING RIGHT GLARESHIELD FLOOD* and *DIM, BRT*) are on panel O8.

The commander's side console light is controlled by an integral off/variable-on control switch. The pilot's side console light is also controlled by an integral off/variable-on control switch. The orbit station light is controlled by the *ORBIT STATION LIGHTING FLOOD ON/OFF* switch and *DIM, BRT* rotary control on panel A6U.

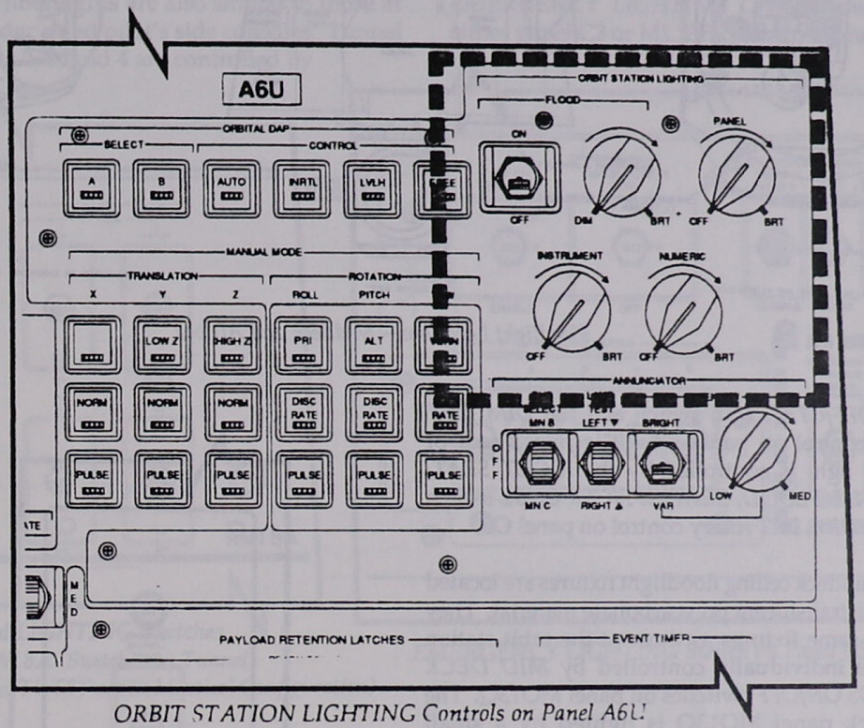

ORBIT STATION LIGHTING Controls on Panel A6U

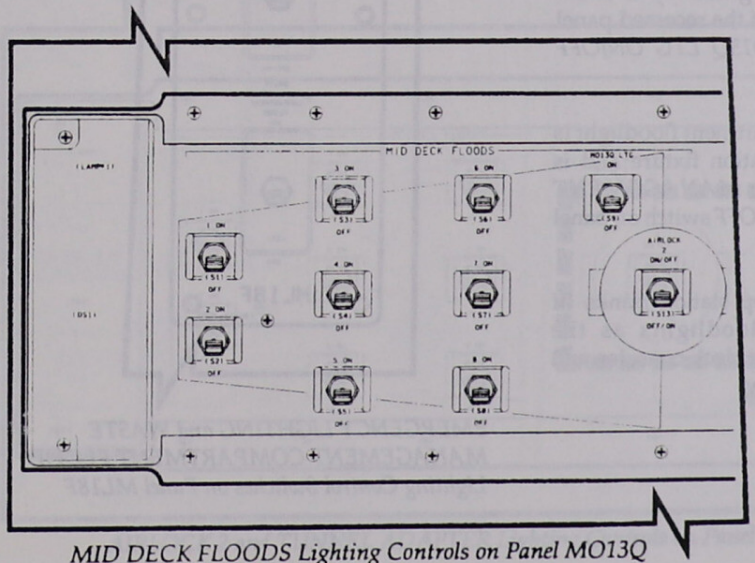

MID DECK FLOODS Lighting Controls on Panel MO13Q

There are two seat/center console floodlights: one for the commander and one for the pilot. Each light has two incandescent bulbs: the left one illuminates the commander's lap or the center console, and the other illuminates the pilot's lap or the center console. The commander or pilot can select either the lap or center console, but not both at once. The commander's seat or console light is controlled by the *LEFT SEAT/CTR CNSL FLOOD,*

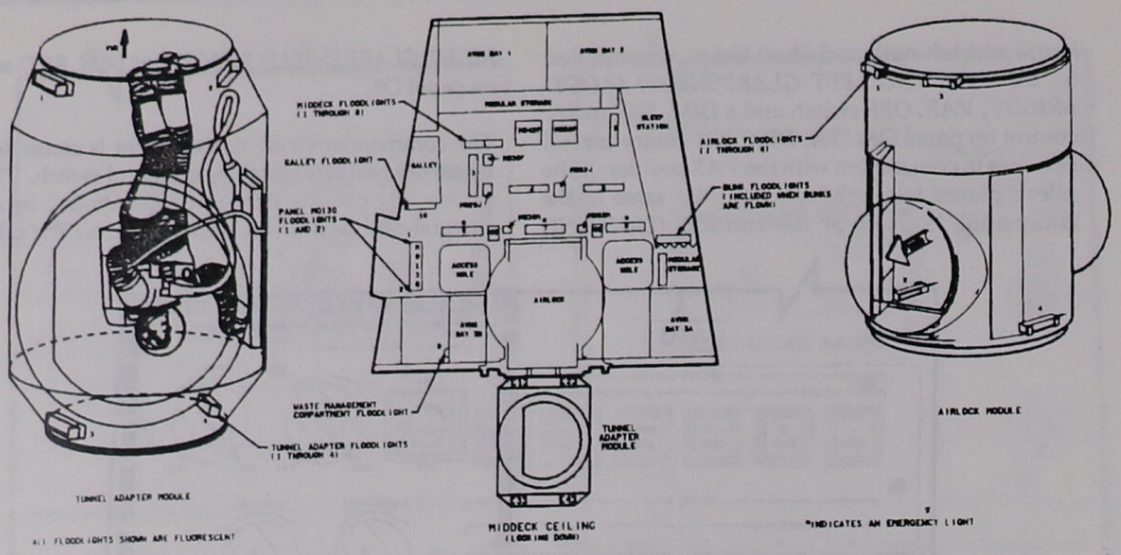

Floodlight Locations – Middeck and Airlock

SEAT/OFF/CTR CNSL switch and the *DIM, BRT* rotary control on panel O6. The pilot's seat or console light is controlled by the *RIGHT SEAT/ CTR CNSL FLOOD, SEAT/OFF/CTR CNSL* switch and the *DIM, BRT* rotary control on panel O8.

Eight middeck ceiling floodlight fixtures are located behind a translucent polycarbonate material. They are the same fixtures as those at the orbit station and are individually controlled by *MID DECK FLOODS ON/OFF* switches on panel MO13Q. The middeck panel MO13Q is lighted by a small fluorescent lamp at each end of the recessed panel and is controlled by the *MO13Q LTG ON/OFF* switch on the panel.

The waste management compartment floodlight is also the same as the orbit station fixture and is controlled by the *WASTE MANAGEMENT COMPARTMENT FLOOD ON/OFF* switch on panel ML18F.

The galley and middeck sleep station bunks (if installed) use the same floodlights as the commander's and pilot's flight deck consoles and are also controlled individually.

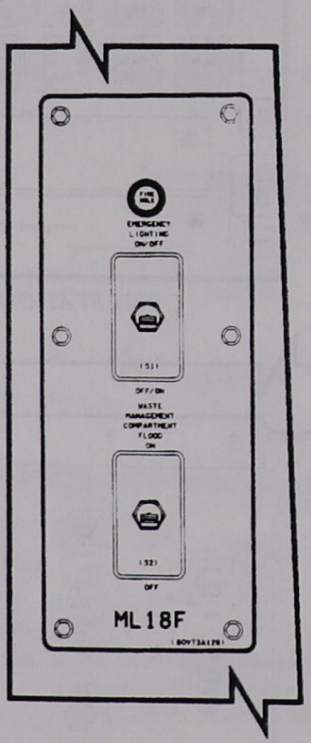

EMERGENCY LIGHTING and WASTE MANAGEMENT COMPARTMENT FLOOD Lighting Control Switches on Panel ML18F

The airlock floodlights are similar to those at the commander's and pilot's flight deck side consoles, except they are controlled by *LIGHTING FLOOD* switches on panel AW18A and an *AIRLOCK 2* switch on panel MO13Q.

If the tunnel adapter is installed for a Spacelab mission, the floodlights are also similar to those at the commander's and pilot's side consoles. Tunnel adapter lights 2, 3, and 4 are controlled by individual *ON/OFF* switches on the tunnel adapter panel TW58T. Tunnel adapter light 1 is controlled by the *TUNNEL ADAPTER 1 ON/OFF* switch on panel MO13Q and the *ON/OFF 1* switch on the tunnel adapter panel.

The emergency floodlights are controlled by *EMERGENCY LIGHTING ON/OFF* switches on either panel C3 or ML18F. The emergency lighting

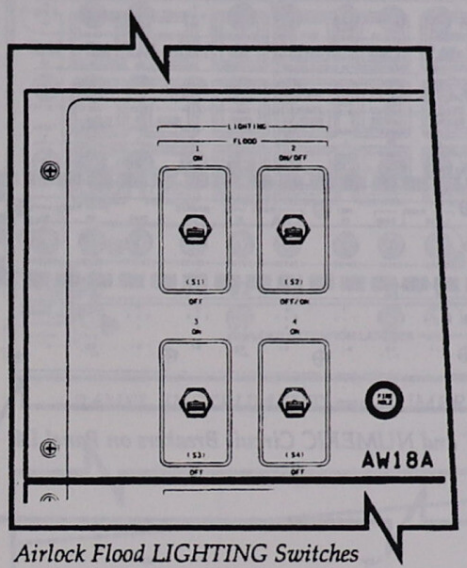

Airlock Flood LIGHTING Switches on Panel AW18A (Switches on Tunnel Adapter Panel TW58T are in Identical Configuration)

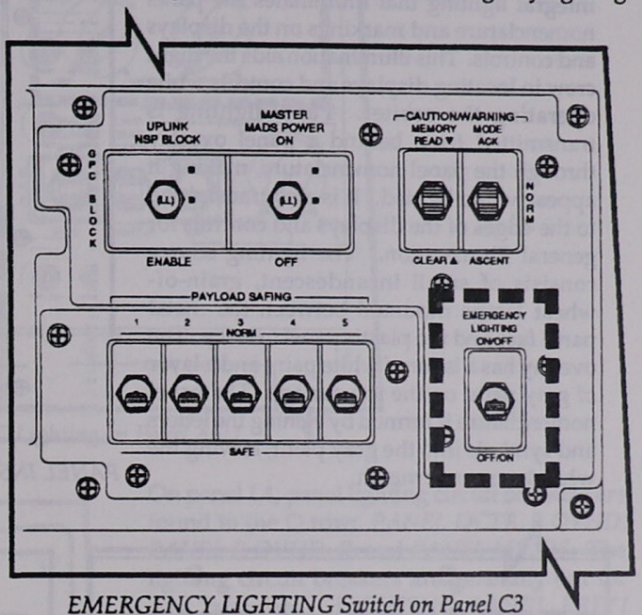

EMERGENCY LIGHTING Switch on Panel C3

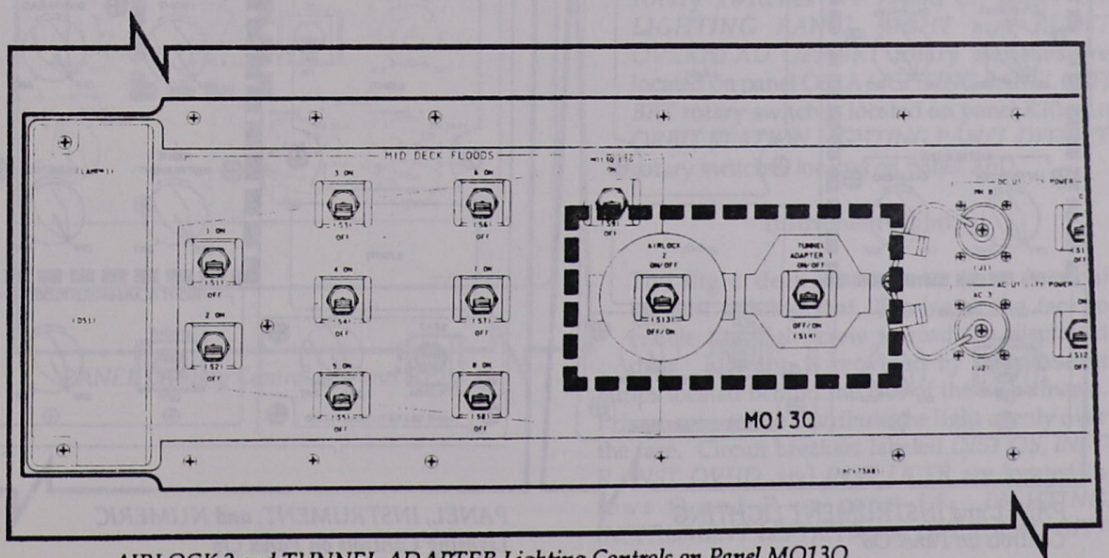

AIRLOCK 2 and TUNNEL ADAPTER Lighting Controls on Panel MO13Q

system is powering the floodlights when both panel switches are in the same position. When the emergency system is turned on, a relay is activated that configures the lights to full bright.

Panel Lighting

Many flight deck instrument panels have integral lighting that illuminates the panel nomenclature and markings on the displays and controls. This illumination aids the flight crew in locating displays and controls while operating the orbiter. Panel lighting is transmitted from behind a panel overlay through the panel nomenclature, making it appear white-lighted. It is also transmitted to the edges of the displays and controls for general illumination. The lighting source consists of small incandescent, grain-of-wheat lamps mounted between the metal panel face and the plastic panel overlay. The overlay has a layer of white paint and a layer of gray paint on the top surface. The panel nomenclature is formed by etching the letters and symbols into the gray paint, leaving the white layer underneath.

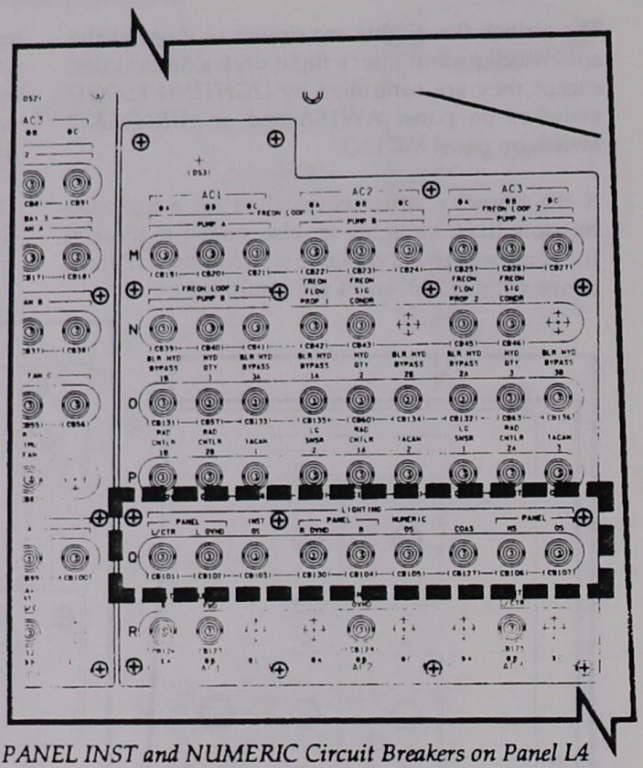

PANEL INST and NUMERIC Circuit Breakers on Panel L4

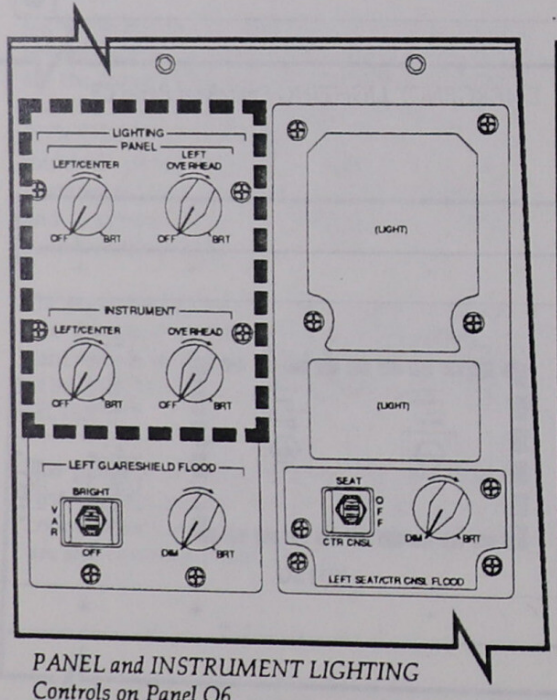

PANEL and INSTRUMENT LIGHTING Controls on Panel O6

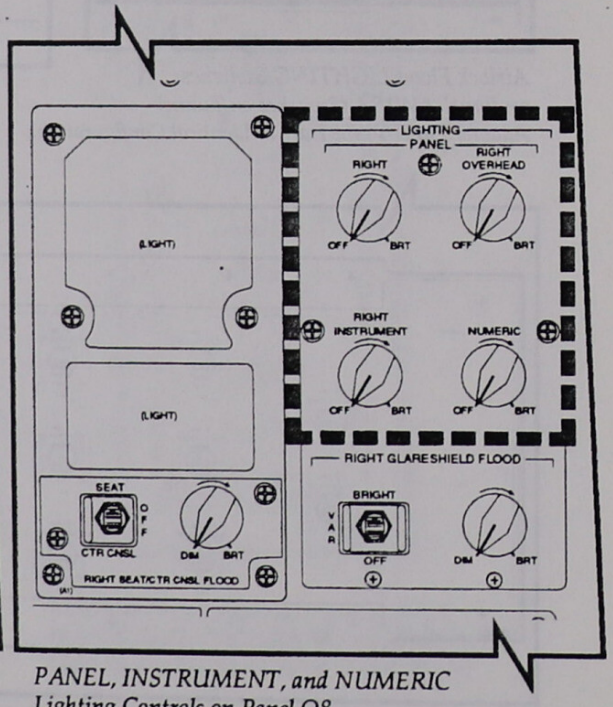

PANEL, INSTRUMENT, and NUMERIC Lighting Controls on Panel O8

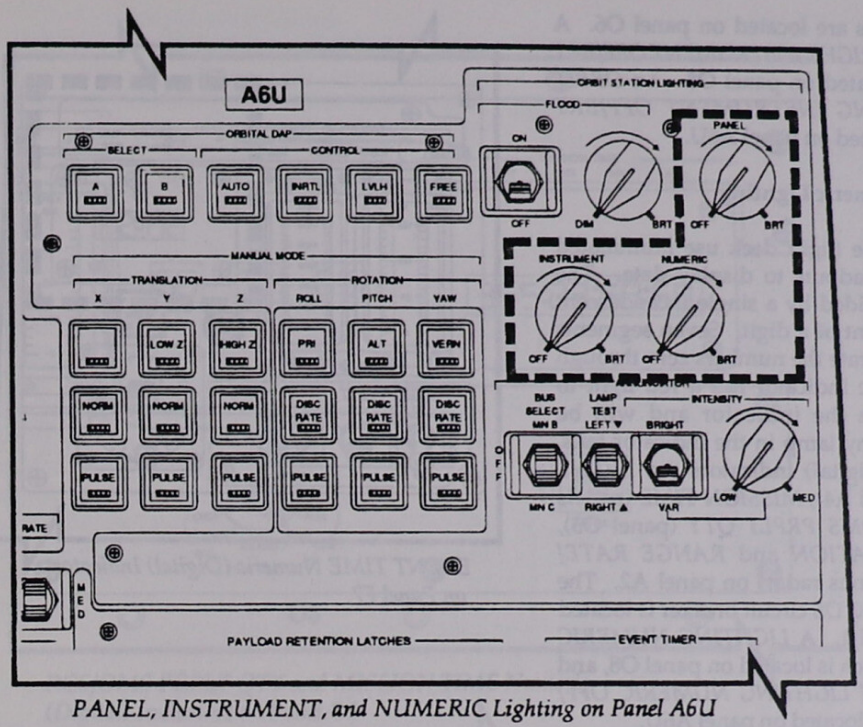

PANEL, INSTRUMENT, and NUMERIC Lighting on Panel A6U

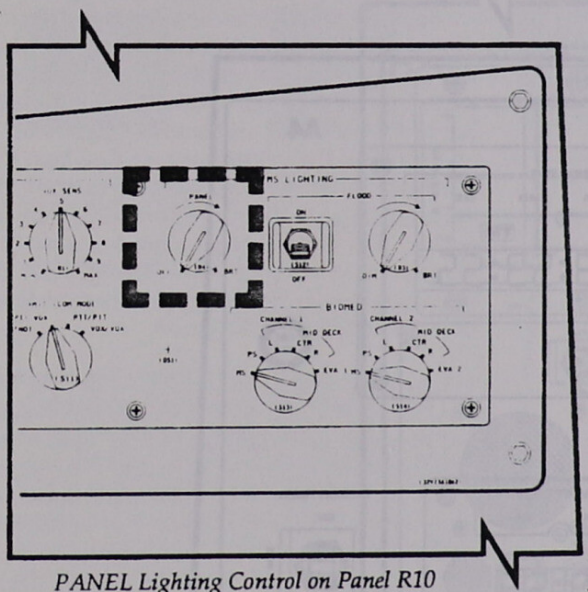

PANEL Lighting Control on Panel R10

On panel L4, panel lighting circuit breakers are found in the Q row: *PANEL L/CTR, L OVHD; PANEL R OVHD, R;* and *PANEL MS, OS.* The lighting circuit breakers are generally out for day launches. *LIGHTING PANEL LEFT/CENTER* and *LEFT OVERHEAD OFF/BRT* rotary switches are found on panel O6. *LIGHTING PANEL RIGHT* and *RIGHT OVERHEAD OFF/BRT* rotary switches are located on panel O8. A *LIGHTING PANEL OFF/BRT* rotary switch is located on panel R10. An *ORBIT STATION LIGHTING PANEL OFF/BRT* rotary switch is located on panel A6U.

Instrument Lighting

The flight deck instruments have internal integral lighting that illuminates the face to enable the flight crew to read the displayed data. Lighting is provided by incandescent lamps located behind the face of the instruments. Prisms are used to distribute the light evenly over the face. Circuit breakers labeled *INST OS, INST R, INST OVHD,* and *INST L/CTR* are located in rows Q and R on panel L4. *LIGHTING INSTRUMENT LEFT/CTR* and *OVERHEAD OFF/*

BRT rotary switches are located on panel O6. A *LIGHTING PANEL RIGHT INSTRUMENT OFF/BRT* rotary switch is located on panel O8. An *ORBIT STATION LIGHTING INSTRUMENT OFF/BRT* rotary switch is located on panel A6U.

Numeric Lighting

Six indicators on the flight deck use illuminated numeric (digital) readouts to display data. The illumination is provided by a single incandescent lamp in each segment of a digit. Seven segments are required to generate the numbers zero through nine. Each numeric indicator has a red light to indicate failures in the indicator and will be illuminated when any lamp in the indicator fails. The six numeric (digital) indicators are *EVENT TIME* (panels F7 and A4), *MISSION TIME* (panels O3 and A4), *RCS/OMS PRPLT QTY* (panel O3), and *RANGE/ELEVATION* and *RANGE RATE/ AZIMUTH* (rendezvous radar) on panel A2. The *LIGHTING NUMERIC OS* circuit breaker is located in row Q on panel L4. A *LIGHTING NUMERIC OFF/BRT* rotary switch is located on panel O8, and an *ORBIT STATION LIGHTING NUMERIC OFF/ BRT* rotary switch is located on panel A6U.

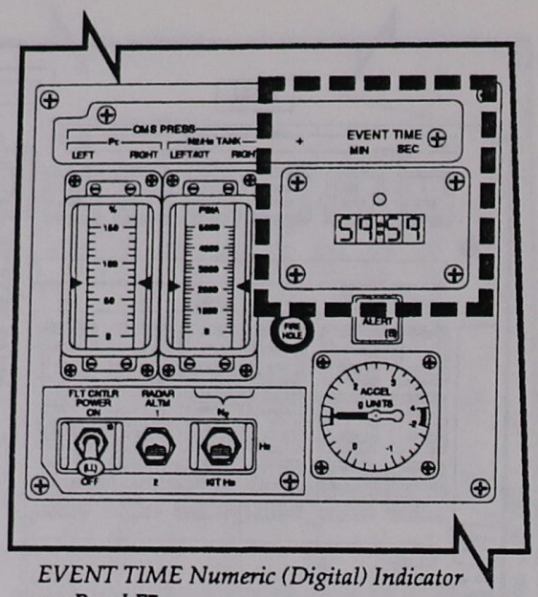

EVENT TIME Numeric (Digital) Indicator on Panel F7

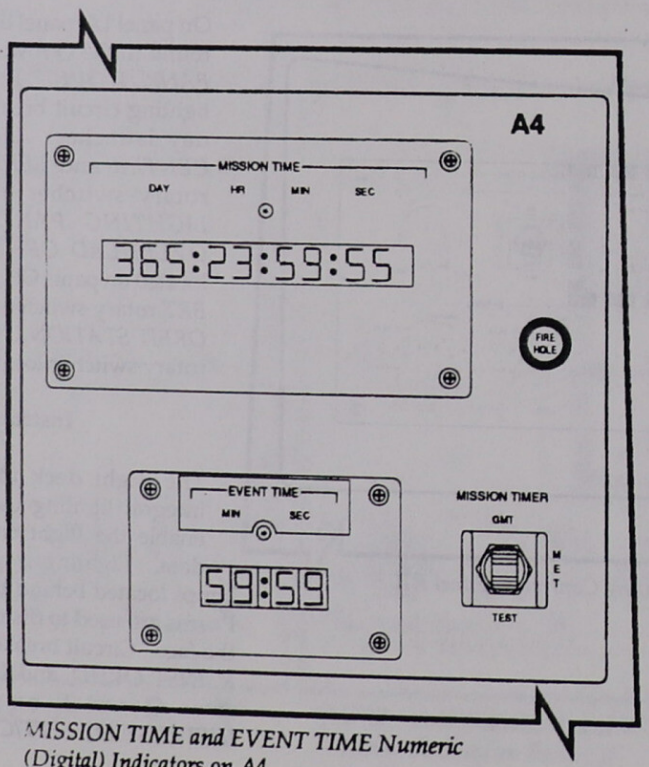

MISSION TIME and EVENT TIME Numeric (Digital) Indicators on A4

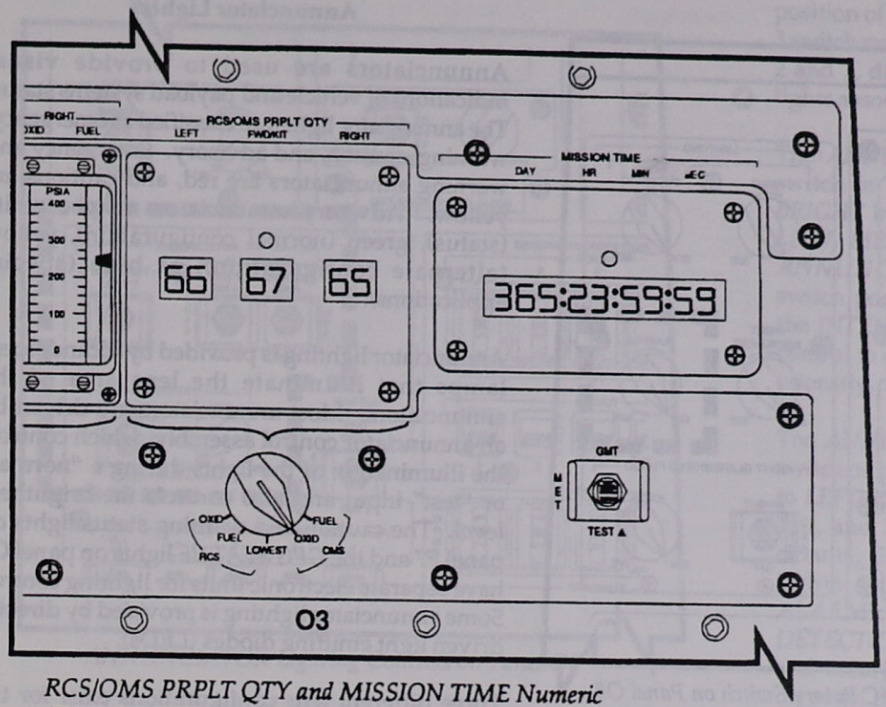

RCS/OMS PRPLT QTY and MISSION TIME Numeric (Digital) Indicators on Panel O3

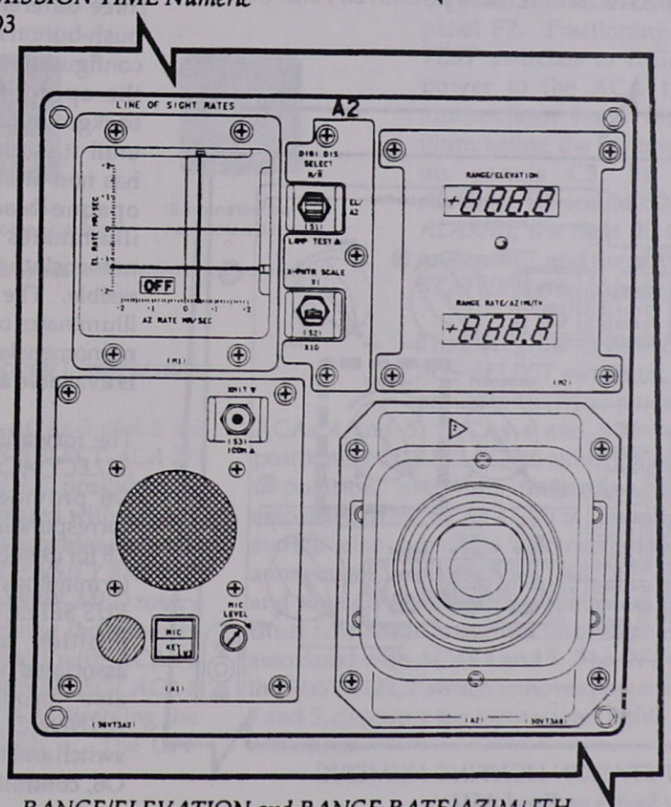

RANGE/ELEVATION and RANGE RATE/AZIMUTH Numeric (Digital) Indicators on Panel A2

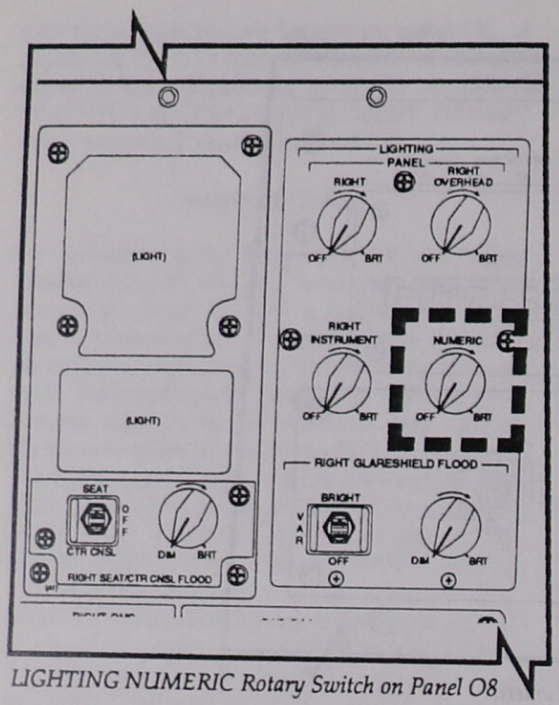

LIGHTING NUMERIC Rotary Switch on Panel O8

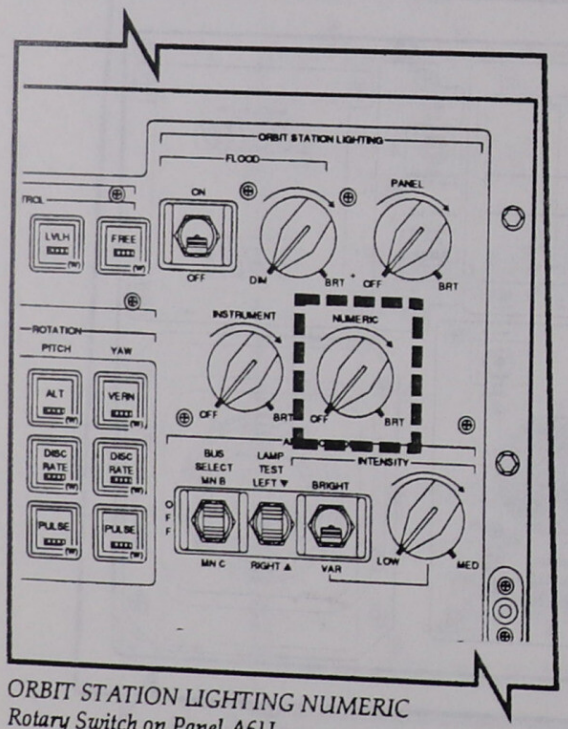

ORBIT STATION LIGHTING NUMERIC Rotary Switch on Panel A6U

Annunciator Lights

Annunciators are used to provide visual indications of vehicle and payload systems status. The annunciator lights are classified as emergency, warning, caution, and advisory. Emergency and warning annunciators are red, and cautions are yellow. Advisory annunciators maybe white (status), green (normal configuration), yellow (alternate configuration), or blue (special applications).

Annunciator lighting is provided by incandescent lamps that illuminate the lens area of the annunciators. Most annunciators are driven by an annunciator control assembly, which controls the illumination of the lights during a "normal" or "test" input and also controls the brightness level. The caution and warning status lights on panel F7 and the *GPC STATUS* lights on panel O1 have separate electronic units for lighting control. Some annunciator lighting is provided by directly driven light emitting diodes (LEDs).

Three different lens configurations exist for the push-button indicators and indicator lights. One configuration has illuminated nomenclature in the appropriate color on an opaque black background. The nomenclature cannot be seen until it is illuminated. Another configuration has non-illuminated white nomenclature on an opaque black background and a bar that illuminates in the appropriate color. The nomenclature in this configuration is always visible. The third configuration has a bar that illuminates on an opaque black background and no nomenclature on the lens, but nomenclature is available as part of the panel.

The forward flight deck *ANNUNCIATOR BUS SELECT ACA 1* and *ACA 2/3* switches on panel O6 provide electrical power to enable the corresponding ac power supplies. (See Section 2.8 for details on the power system and associated terminology.) ACA 1 is enabled by positioning *BUS SELECT ACA 1* to either the *MN A* or *MN B* position, and thus the annunciator lights associated with ACA 1. *BUS SELECT ACA 1* also provides electrical power to the *ANNUNCIATOR INTENSITY BRIGHT, VAR* switch and the *LOW, MED* rotary switch on panel O6, controlling the intensity of the annunciator

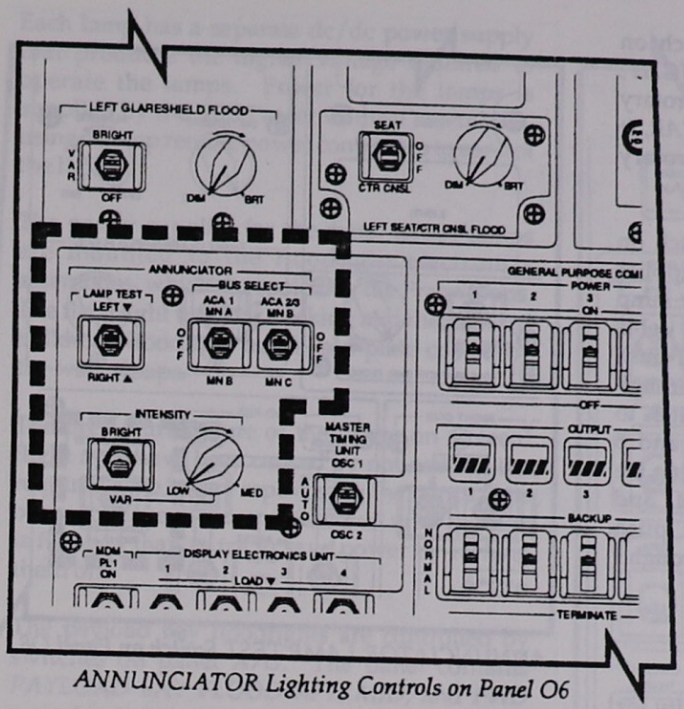

ANNUNCIATOR Lighting Controls on Panel O6

Illuminated nomenclature (Nomenclature is black when not illuminated.)

Illuminated bar-white nomenclature

Illuminated bar-no nomenclature

(Bars appear black when not illuminated.)

All backgrounds are opaque black

Typical Annunciator Configurations

lights associated with ACA 1. ACAs 2 and 3 are enabled by positioning the *BUS SELECT ACA 2/3* switch to either the *MN B* or *MN C* position, and thus the annunciator lights associated with ACAs 2 and 3. *BUS SELECT ACA 2/3* also provides electrical power to the annunciator light *INTENSITY BRIGHT, VAR* switch on panel O6 and the *LOW, MED* rotary control on panel O6, thus controlling the intensity of the annunciator lights associated with ACAs 2 and 3. The *OFF* position of the *BUS SELECT ACA 1* switch removes power from ACA 1, disabling the annunciator lights associated with it. The *OFF* position of the *BUS SELECT ACA 2/3* switch removes power from ACAs 2 and 3, disabling the annunciator lights associated with them.

The *ANNUNCIATOR INTENSITY* switch on panel O6 positioned to *BRIGHT* bypasses the *INTENSITY LOW, MED* rotary control. The *ANNUNCIATOR INTENSITY* switch positioned to *VAR* permits the *INTENSITY LOW, MED* rotary control to control annunciator light intensity.

The *ANNUNCIATOR LAMP TEST* switch on panel O6 or O8 positioned to *LEFT* applies power to the ACA 1, 2, and 3 annunciator lamp test circuits, illuminating annunciator lights on panels F2 (*MASTER ALARM*), F6, L1 (*SMOKE DETECTION*), O1 (*GPC STATUS*), and M029J, the left 20 C/W lights on panel F7, and the *SM ALERT* on panel F7. Positioning the *LAMP TEST* switches to *RIGHT* applies power to the ACA 1, 2, and 3 annunciator lamp test circuits, illuminating the annunciator lights on panels C3, F4 (*MASTER ALARM*), F8, and M052J (*MASTER ALARM*), the right 20 C/W lights on panel F7, and the *MAIN ENGINE STATUS* lights on panel F7.

The aft flight deck *ANNUNCIATOR BUS SELECT* switch on panel A6U provides electrical power to enable ACAs 4 and 5. ACAs 4 and 5 are enabled by positioning *BUS SELECT* to either the *MN B* or *MN C* position, and thus the annunciator lights associated with ACAs 4 and 5. The *BUS SELECT* switch also provides electrical power to the annunciator light *INTENSITY BRIGHT, VAR* switch and the *LOW, MED* rotary control on panel A6U, thus controlling annunciator light intensity associated with ACAs 4 and 5. The *OFF* position of the *BUS SELECT* switch removes power from ACAs 4 and 5, disabling the annunciator lights associated with them.

The *ANNUNCIATOR INTENSITY* switch on panel A6U, when positioned to *BRIGHT*, bypasses the *INTENSITY LOW, MED* rotary control on panel A6U. Positioned to *VAR*, it permits the *INTENSITY LOW, MED* rotary control to vary annunciator light intensity.

The *ANNUNCIATOR LAMP TEST* switch on panel A6U, when positioned to *LEFT*, applies power to the ACA 4 and 5 annunciator lamp test circuits, illuminating the annunciator lights on panels A2 and A6U, the *VIDEO INPUT* push buttons on panel A7U, and columns 0 through 4 on panel R13U. Positioning the switch to *RIGHT* applies power to the ACA 4 and 5 annunciator lamp test circuits, illuminating the annunciator lights (*MASTER ALARM*) and *VIDEO OUTPUT* and *ALC/GAMMA* push buttons on panel A7U and columns 5 through 9 on panel R13U.

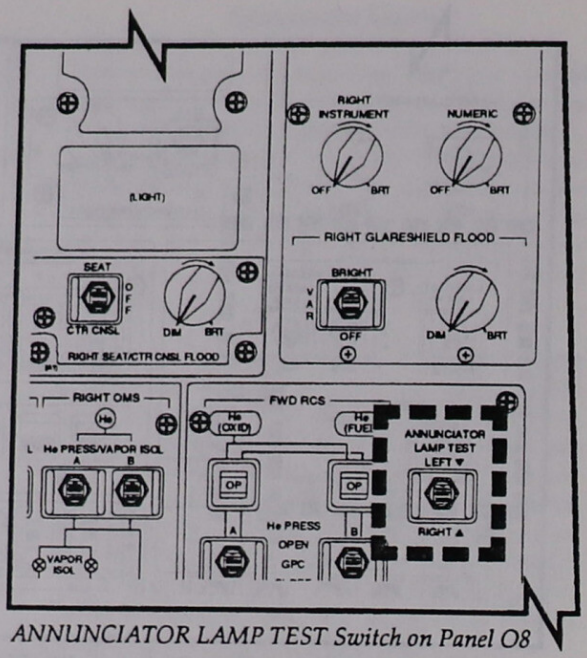

ANNUNCIATOR LAMP TEST Switch on Panel O8

Exterior Lighting

The exterior floodlights improve visibility for the flight crew during payload bay door operations, EVA operations, RMS operations, and stationkeeping and docking.

The lights used to light the payload bay use metal halide lamps. These lamps are gas discharge arc tubes similar to mercury vapor lamps.

At turn on, it takes 2 to 3 minutes to reach full brightness. When the light is turned off, it must not be repowered for 10 to 16 minutes, depending on the amount of payload blocking. When blocked by a 160-inch diameter cylinder, the 16 minute off period is required.

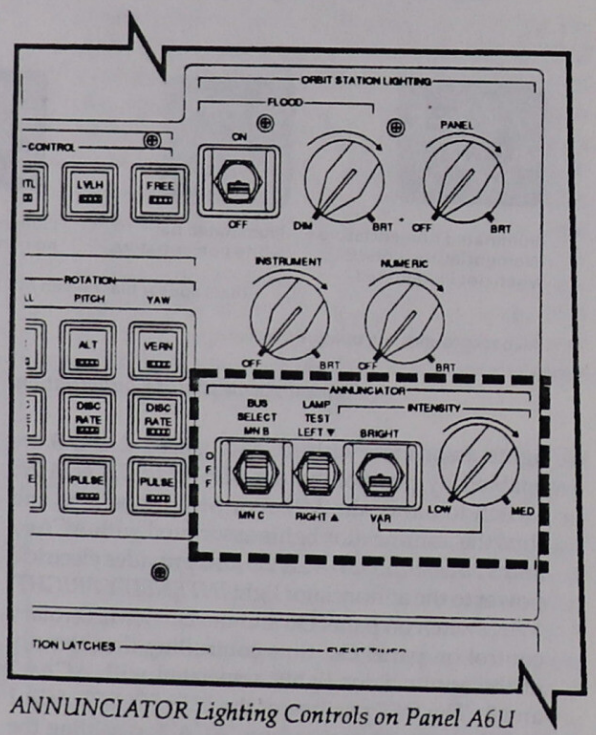

ANNUNCIATOR Lighting Controls on Panel A6U

Each lamp has a separate dc/dc power supply that produces the higher voltage required to operate the lamps. Power for the lamps is supplied by the Mid Power Control assemblies, using 10 amp remote power controllers to control the lights.

The power supplies for the metal halide lamps are mounted to the floodlight electronics assemblies, which are cooled by the Freon loops. The floodlight used for docking and the forward bulkhead floodlight use a cold plate cooled by the water loops.

The premature failure of the lamps on a recent flight may have been caused by not waiting the required time before repowering the lamps. It is better to leave the lamps powered until the task is finished than to try to save power by turning them off.

The payload bay floodlights are controlled by switches on panel A7U. The panel contains *PAYLOAD BAY FLOOD AFT, MID,* and *FWD* sets of switches, with a *STBD* and *PORT* switch in each set. The *DOCKING* light switch is below the payload bay flood controls on panel A7U; it has *BRIGHT, DIM,* and *OFF* settings. The RMS floodlight is controlled by *RMS SPOTLIGHT STBD* and *PORT* switches on panel A7U.

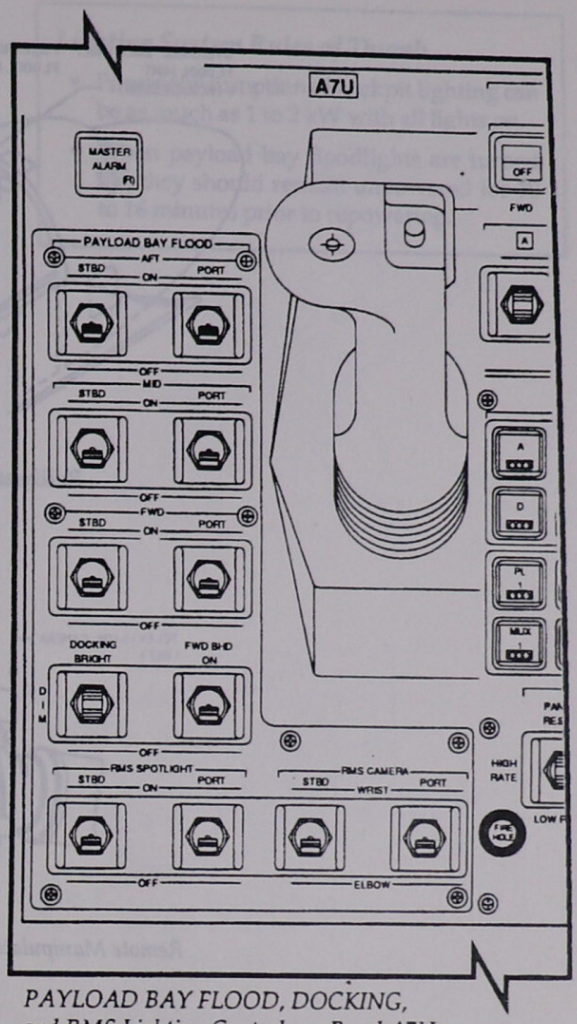

PAYLOAD BAY FLOOD, DOCKING, and RMS Lighting Controls on Panel A7U

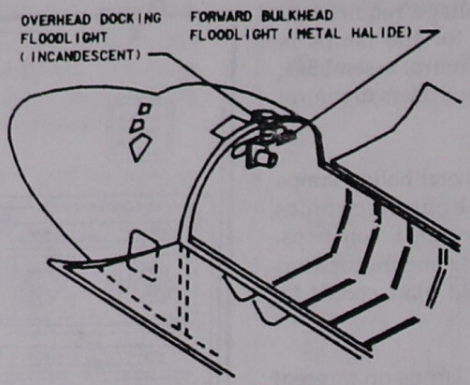

Bulkhead Floodlights

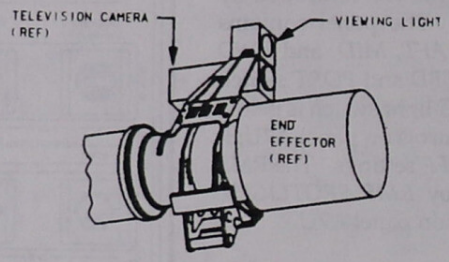

Remote Manipulator System Wrist Floodlight

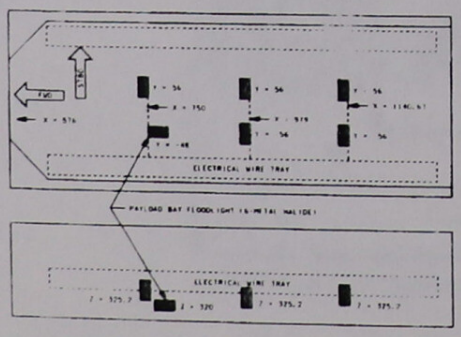

Payload Bay Forward/Mid/Aft Floodlights

Lighting System Summary Data

- Interior lighting consisting of floodlights, panel lights, instrument lights, numeric lights, and annunciator lights provides general illumination throughout the crew cabin.
- Exterior floodlights and spotlights improve visibility for the flight crew during payload bay door operations, EVA operations, RMS operations, and stationkeeping and docking.
- Emergency lighting is provided by separate fixtures powered by a separate power input from an essential bus. Emergency lighting is controlled by switches on panels C3 and ML18F.
- Switches controlling the lighting system are distributed over panels R10, L9, O8, A6U, A7U, MO13Q, ML18F, AW18A, and O6.
- Lighting system circuit breakers are located on panel L4.

Lighting System Rules of Thumb

- Power consumption of cockpit lighting can be as much as 1 to 2 kW with all lights on.
- When payload bay floodlights are turned off, they should remain unpowered for 10 to 16 minutes prior to repowering.

2.16 MAIN PROPULSION SYSTEM (MPS)

CONTENTS

Description 2.16-1
Space Shuttle Main Engines (SSMEs) 2.16-3
Space Shuttle Main Engine Controllers .. 2.16-8
Propellant Management System (PMS) .. 2.16-14
Helium System 2.16-20
MPS Hydraulic Systems 2.16-24
Malfunction Detection 2.16-26
Operations 2.16-29

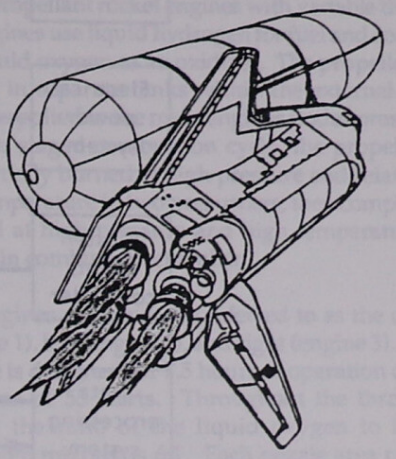

Description

The main engines, assisted by two solid rocket motors during the initial phases of the ascent trajectory, provide the vehicle acceleration from lift-off to main engine cutoff (MECO) at a predetermined velocity.

The MPS has critical interfaces with the orbiter hydraulic system, electrical power system, master events controller, and data processing system. The hydraulic system supplies hydraulic pressure to operate the main engine valves and gimbal actuators. The electrical power system furnishes ac power to operate the main engine controllers and dc power to operate the valves and transducers in the propellant management and helium systems. The master events controller initiates firings of pyrotechnic devices for separating the solid rocket boosters from the external tank and the external tank from the orbiter. The data processing system controls most of the MPS functions during ascent and entry.

The MPS consists of three Space Shuttle Main Engines (SSMEs), three SSME controllers, the external tank, the orbiter MPS propellant management system and helium subsystem, four ascent thrust vector control units, and six SSME hydraulic TVC servoactuators. (The external tank is described in detail in Section 1.3.) Most of the MPS is located in the aft fuselage beneath the vertical stabilizer.

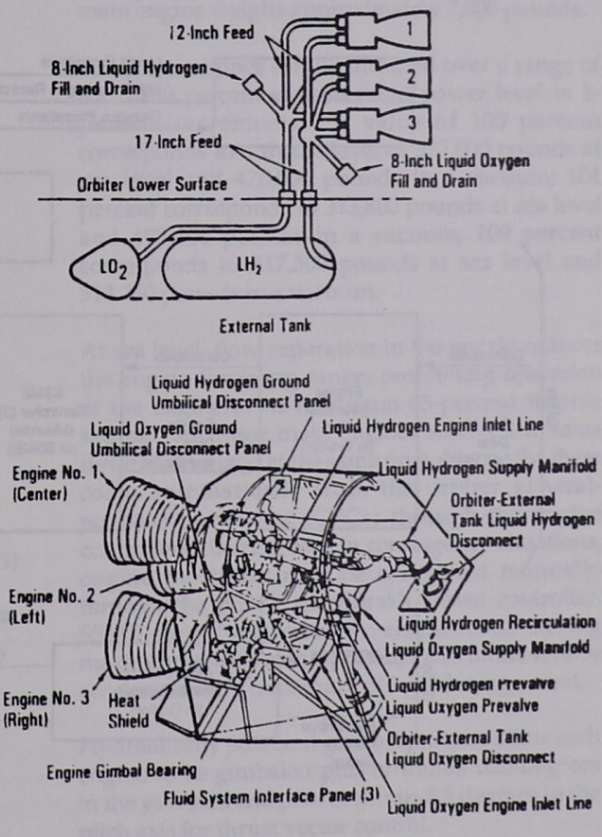

Main Propulsion System

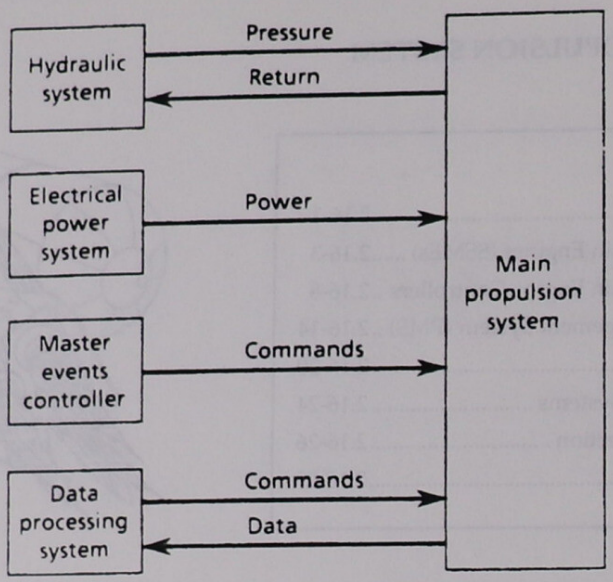

Critical Interfaces with the Main Propulsion System

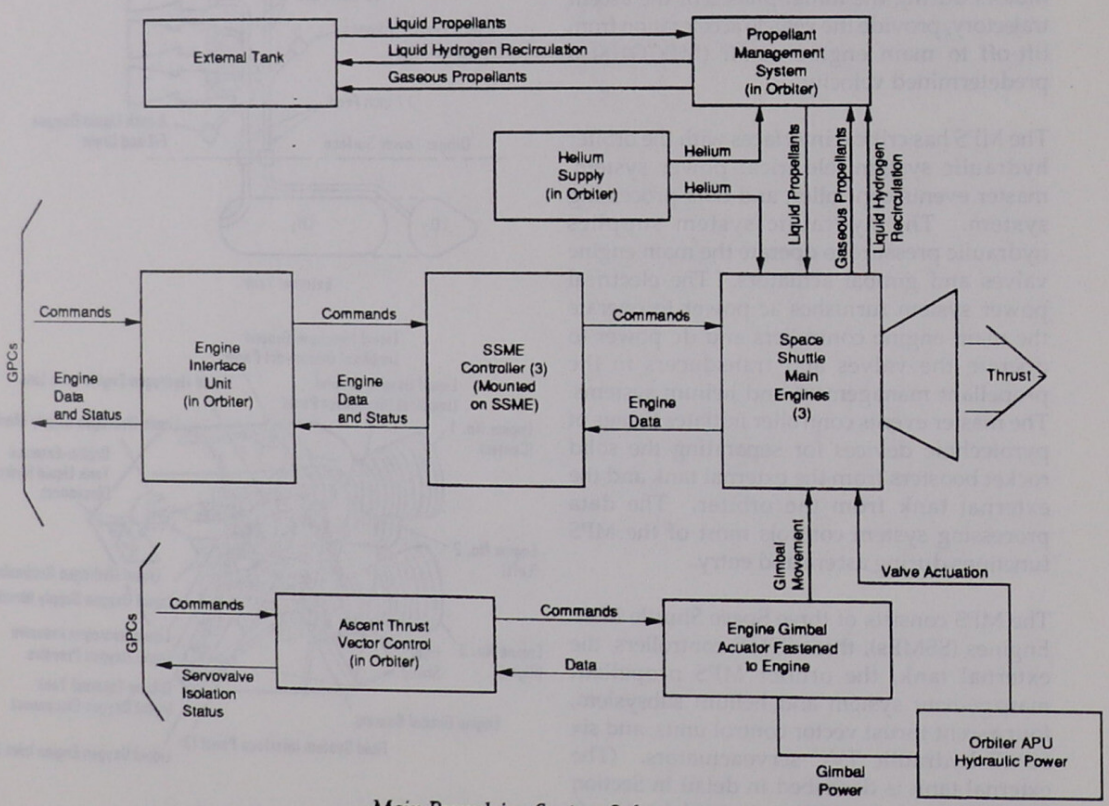

Main Propulsion System Subsystem

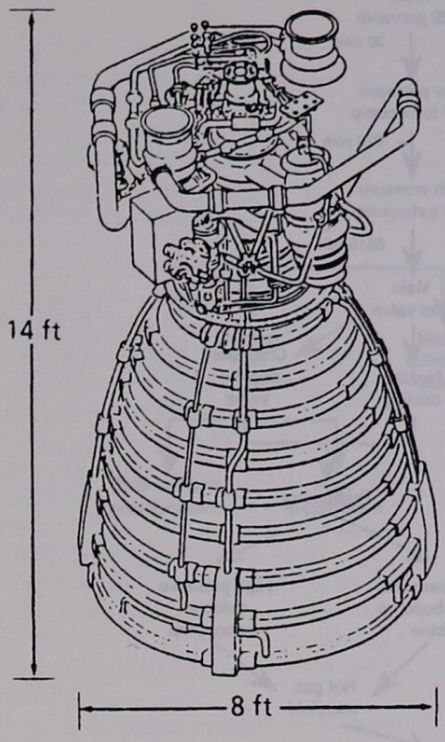

Space Shuttle Main Engine

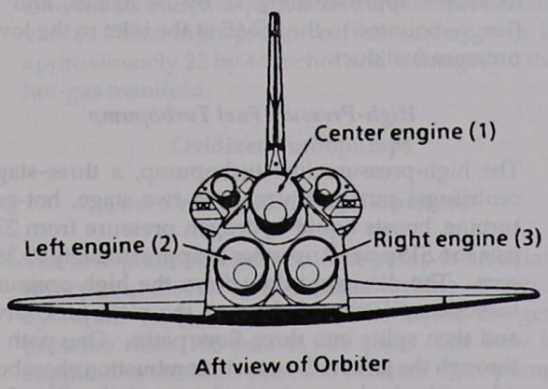

Main Engine Numbering System

Space Shuttle Main Engines (SSMEs)

The three SSMEs are reusable, high-performance, liquid propellant rocket engines with variable thrust. The engines use liquid hydrogen for fuel and cooling and liquid oxygen as an oxidizer. The propellant is carried in separate tanks within the external tank and is supplied to the main engines under pressure. Using a staged combustion cycle, the propellants are partially burned at high pressure and relatively low temperature in two preburners, then completely burned at high pressure and high temperature in the main combustion chamber.

The engines are generally referred to as the center (engine 1), left (engine 2), and right (engine 3). Each engine is designed for 7.5 hours of operation over a life span of 55 starts. Throughout the throttling range, the ratio of the liquid oxygen to liquid hydrogen mixture is 6:1. Each nozzle area ratio is 77.5:1. The engines are 14 feet long and 7.5 feet in diameter at the nozzle exit. Overall, a Space Shuttle main engine weighs approximately 7,000 pounds.

The main engines can be throttled over a range of 65 to 109 percent of their rated power level in 1-percent increments. A value of 100 percent corresponds to a thrust level of 375,000 pounds at sea level and 470,000 pounds in a vacuum; 104 percent corresponds to 393,800 pounds at sea level and 488,800 pounds in a vacuum; 109 percent corresponds to 417,300 pounds at sea level and 513,250 pounds in a vacuum.

At sea level, flow separation in the nozzle reduces the engine throttling range, prohibiting operation of the engine at its minimum 65-percent throttle setting. All three main engines receive the same throttle command at the same time. Normally, these come automatically from the orbiter general-purpose computers (GPCs) through the engine controllers. During certain contingency situations, engine throttling may be controlled manually through the pilot's speedbrake/thrust controller. SSME throttling reduces vehicle loads during maximum aerodynamic pressure and limits vehicle acceleration to a maximum of 3 g's during ascent.

Hydraulically powered gimbal actuators allow each engine to be gimbaled plus or minus 10.5 degrees in the yaw axis and plus or minus 8.5 degrees in the pitch axis for thrust vector control.

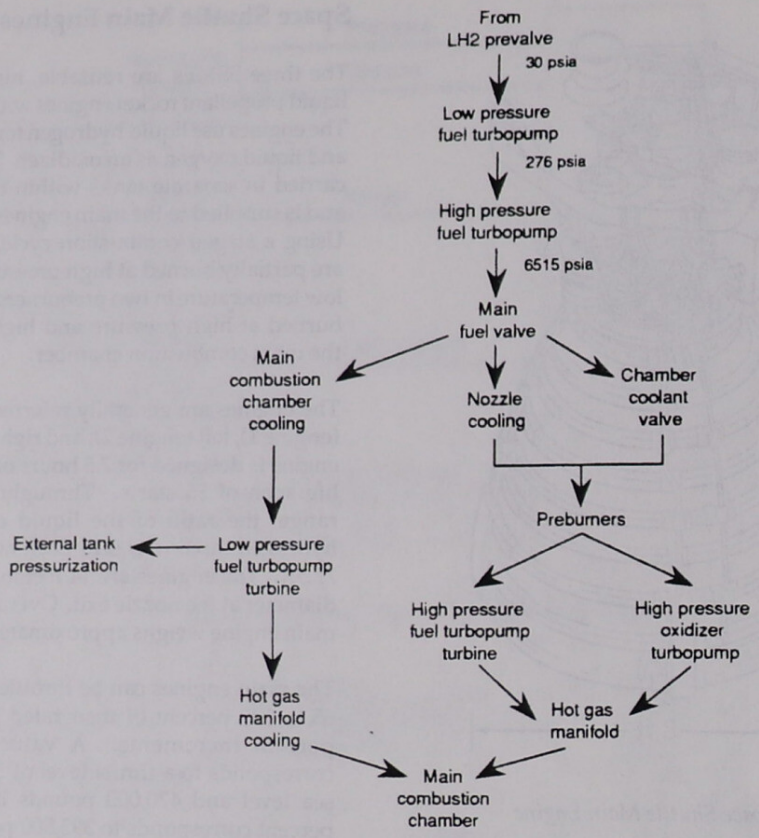

Main Engine Fuel Flow

The SSME major components are the fuel and oxidizer turbopumps, preburners, a hot gas manifold, main combustion chamber, nozzle, oxidizer heat exchanger, and propellant valves.

Fuel Turbopumps

Low-Pressure Fuel Turbopump

The low-pressure fuel turbopump is an axial-flow pump driven by a two-stage axial flow turbine powered by gaseous hydrogen. It boosts liquid hydrogen pressure from 30 psia to 276 psia and supplies the high-pressure fuel turbopump. During engine operation, this pressure increase allows the high-pressure fuel turbopump to operate at high speeds without cavitating. The low-pressure fuel turbopump operates at approximately 16,185 rpm, measures approximately 18 by 24 inches, and is flange-mounted to the SSME at the inlet to the low-pressure fuel duct.

High-Pressure Fuel Turbopump

The high-pressure fuel turbopump, a three-stage centrifugal pump driven by a two-stage, hot-gas turbine, boosts liquid hydrogen pressure from 276 psia to 6,515 psia. It operates at approximately 35,360 rpm. The discharge flow from the high-pressure turbopump is routed through the main fuel valve and then splits into three flow paths. One path is through the jacket of the main combustion chamber, where the hydrogen is used to cool the chamber walls, and then to the low-pressure fuel turbopump to drive its turbine. The second flow path, through the chamber coolant valve, supplies liquid hydrogen

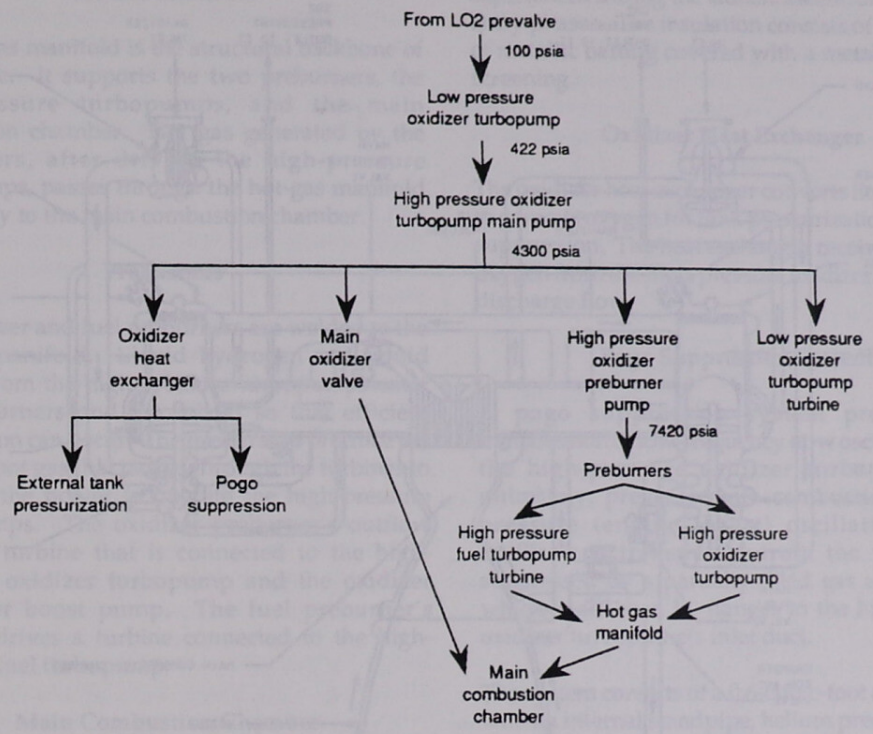

Main Engine Oxidizer Flow

to the preburner combustion chambers and also cools the hot gas manifold. The third hydrogen flow path is used to cool the engine nozzle. It then joins the second flow path from the chamber coolant valve. The high-pressure fuel turbopump is approximately 22 by 44 inches and is flanged to the hot-gas manifold.

Oxidizer Turbopumps

Low-Pressure Oxidizer Turbopump

The low-pressure oxidizer turbopump is an axial-flow pump driven by a six-stage turbine powered by liquid oxygen. It boosts the liquid oxygen pressure from 100 psia to 422 psia. The flow is supplied to the high-pressure oxidizer turbopump to permit it to operate at high speeds without cavitating. The low-pressure oxidizer turbopump operates at approximately 5,150 rpm, measures approximately 18 by 18 inches, and is flange-mounted to the orbiter propellant ducting.

High-Pressure Oxidizer Turbopump

The high-pressure oxidizer turbopump consists of two single-stage centrifugal pumps (a main pump and a preburner pump) mounted on a common shaft and driven by a two-stage, hot-gas turbine. The main pump boosts liquid oxygen pressure from 422 psia to 4,300 psia while operating at approximately 28,120 rpm. The high-pressure oxidizer turbopump discharge flow splits into several paths, one of which is routed to drive the low-pressure oxidizer turbopump turbine. Another path is routed through the main oxidizer valve and enters the main combustion chamber. Another small flow path is tapped off and sent to the oxidizer heat exchanger, where it is vaporized and then used to pressurize the external tank. The final path enters the preburner boost pump to raise the liquid oxygen's pressure from 4,300 psia to 7,420 psia at the inlet to the liquid oxygen preburner. The high-pressure oxidizer turbopump measures approximately 24 by 36 inches. It is flanged to the hot-gas manifold.

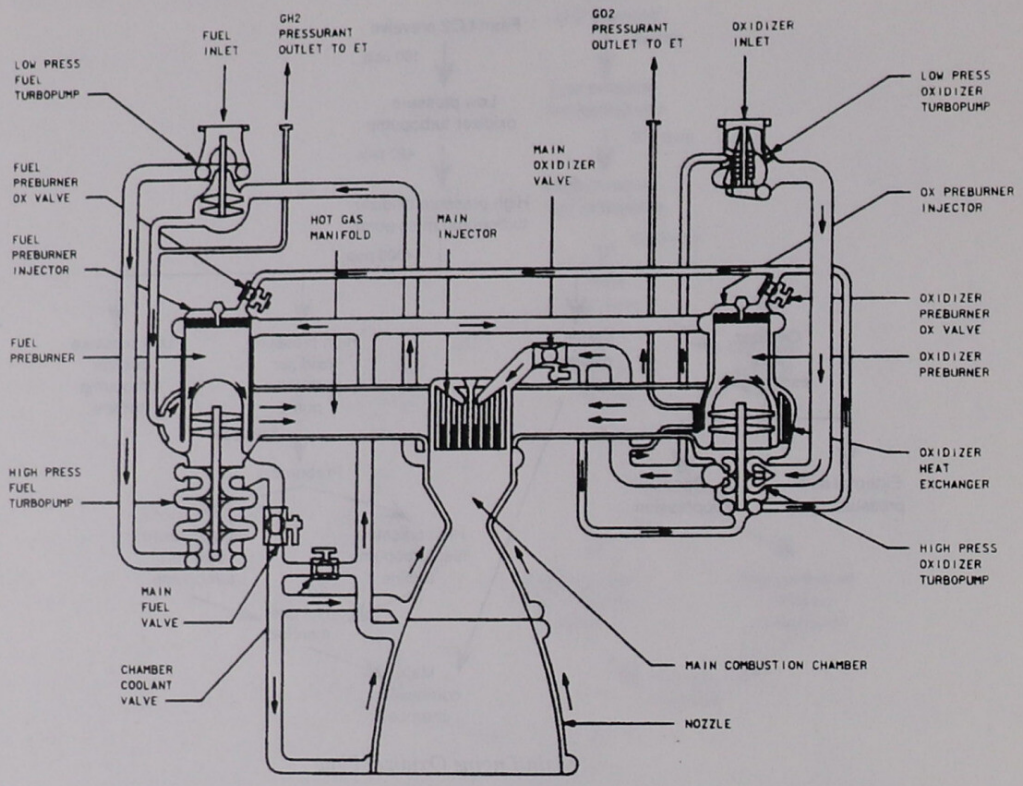

Main Engine Schematic

Bellows

The low-pressure oxygen and low-pressure fuel turbopumps are mounted 180 degrees apart on the engine. The lines from the low-pressure turbopumps to the high-pressure turbopumps contain flexible bellows that enable them to flex when loads are applied. This prevents them from cracking during engine operations.

Helium Purge

Because the high-pressure oxidizer turbopump turbine and pumps are mounted on a common shaft, mixing the fuel-rich hot gas in the turbine section and the liquid oxygen in the main pump could create a hazard. To prevent this, the two sections are separated by a cavity that is continuously purged by the MPS engine helium supply during engine operation. Two seals, one located between the turbine section and the cavity, and the other between the pump section and cavity, minimize leakage into the cavity.

WARNING

Depletion of the MPS helium supply or closure of both MPS isolation valves will cause loss of helium pressure in the cavity separating the fuel-rich hot gas and the liquid oxygen in the main pump. This condition results in an automatic engine shutdown if limits are enabled. If limits are inhibited, leakage through one or both of the seals and mixing of the propellants could result in uncontained engine damage when helium pressure is lost.

Hot Gas Manifold

The hot-gas manifold is the structural backbone of the engine. It supports the two preburners, the high-pressure turbopumps, and the main combustion chamber. Hot gas generated by the preburners, after driving the high-pressure turbopumps, passes through the hot-gas manifold on the way to the main combustion chamber.

Preburners

The oxidizer and fuel preburners are welded to the hot-gas manifold. Liquid hydrogen and liquid oxygen from the high-pressure turbopumps enter the preburners and are mixed so that efficient combustion can occur. The preburners produce the fuel-rich hot gas that passes through the turbines to generate the power to operate the high-pressure turbopumps. The oxidizer preburner's outflow drives a turbine that is connected to the high-pressure oxidizer turbopump and the oxidizer preburner boost pump. The fuel preburner's outflow drives a turbine connected to the high-pressure fuel turbopump.

Main Combustion Chamber

Each engine main combustion chamber receives fuel-rich hot gas from the hot-gas manifold cooling circuit. The gaseous hydrogen and liquid oxygen enter the chamber at the injector, which mixes the propellants. A small augmented spark igniter chamber is located in the center of the injector. The dual-redundant igniter is used during the engine start sequence to initiate combustion. The igniters are turned off after approximately 3 seconds because the combustion process is self-sustaining. The main injector and dome assembly are welded to the hot-gas manifold. The main combustion chamber is bolted to the hot-gas manifold. The combustion chamber, as well as the nozzle, is cooled by gaseous hydrogen flowing through coolant passages.

The nozzle assembly is bolted to the main combustion chamber. The nozzle is 113 inches long, with an exit plane of 94 inches. The physical dimension of the nozzle creates a 77.5:1 expansion ratio. A support ring welded to the forward end of the nozzle is the engine attach point to the engine heat shield. Thermal protection is provided for the nozzles to protect them from the high heating rates experienced during the launch, ascent, on-orbit, and entry phases. The insulation consists of four layers of metallic batting covered with a metallic foil and screening.

Oxidizer Heat Exchanger

The oxidizer heat exchanger converts liquid oxygen to gaseous oxygen for tank pressurization and pogo suppression. The heat exchanger receives its liquid oxygen from the high-pressure oxidizer turbopump discharge flow.

Pogo Suppression System

A pogo suppression system prevents the transmission of low-frequency flow oscillations into the high-pressure oxidizer turbopump and, ultimately, prevents main combustion chamber pressure (engine thrust) oscillation. Flow oscillations transmitted from the vehicle are suppressed by a partially filled gas accumulator, which is attached by flanges to the high-pressure oxidizer turbopump's inlet duct.

The system consists of a 0.6-cubic-foot accumulator with an internal standpipe, helium precharge valve package, gaseous oxygen supply valve package, and four recirculation isolation valves.

During engine start, the accumulator is charged with helium 2.4 seconds after the start command to provide pogo protection until the engine heat exchanger is operational, and gaseous oxygen is available. The accumulator is partially chilled by liquid oxygen during the engine chill-down operation. It fills to the overflow standpipe line inlet level, which is sufficient to preclude gas ingestion at engine start. During engine operation, the accumulator is charged with a continuous gaseous oxygen flow.

The liquid level in the accumulator is controlled by an internal overflow standpipe, which is orificed to regulate the gaseous oxygen overflow at varying engine power levels. The system is sized to provide sufficient supply of gaseous oxygen at the minimum flow rate and to permit sufficient gaseous oxygen overflow at the maximum pressure transient in the low-pressure oxidizer turbopump discharge duct. Under all other conditions, excess gaseous and liquid oxygen are recirculated to the low-pressure

oxidizer turbopump inlet through the engine oxidizer bleed duct. The pogo accumulator is also pressurized at engine shutdown to provide a positive pressure at the high-pressure oxidizer turbopump inlet. The post-charge prevents turbine overspeed in the zero-gravity environment.

> **CAUTION**
>
> Insufficient helium supply for engine shutdown could result in engine damage during shutdown. A pre-MECO manual shutdown may be required if a leak develops in the helium system.

Valves

Each engine has five propellant valves (oxidizer preburner oxidizer, fuel preburner oxidizer, main oxidizer, main fuel, and chamber coolant) that are hydraulically actuated and controlled by electrical signals from the engine controller. They can be fully closed by using the MPS engine helium supply system as a backup actuation system.

High-pressure oxidizer turbopump and high-pressure fuel turbopump turbine speed depends on the position of the oxidizer and fuel preburner oxidizer valves. The engine controller uses the oxidizer preburner oxidizer valves to control engine thrust by regulating the flow of liquid oxygen to the preburners. The oxidizer and fuel preburner oxidizer valves increase or decrease the liquid oxygen flow into the preburner, thereby increasing or decreasing preburner chamber pressure and high-pressure oxidizer turbopump and high-pressure fuel turbopump turbine speed. Liquid oxygen and gaseous hydrogen flow into the main combustion chamber, which increases or decreases engine thrust. The fuel preburner oxidizer valve is used to maintain a constant 6:1 propellant mixture ratio.

The main oxidizer valve controls liquid oxygen flow into the engine combustion chamber. The main fuel valve controls the total liquid hydrogen flow into the engine cooling circuit, the preburner supply lines, and the low-pressure fuel turbopump turbine. When the engine is operating, the main valves are fully open.

A chamber coolant valve on each engine combustion chamber coolant bypass duct regulates the amount of gaseous hydrogen allowed to bypass the nozzle coolant loop to control engine temperature. The chamber coolant valve is 100 percent open before engine start, at power levels between 100 and 109 percent. For power levels between 65 and 100 percent, the valve's position will range from 66.4 to 100 percent open.

Propellant Dump

The main oxidizer valve is opened to allow residual liquid oxygen to be dumped overboard through the engine after engine shutdown. Both liquid hydrogen fill/drain valves, as well as the fuel bleed valve, are opened after engine shutdown to allow residual liquid hydrogen to drain overboard.

Space Shuttle Main Engine Controllers

The controller is a pressurized, thermally conditioned electronics package attached to the thrust chamber and nozzle coolant outlet manifolds on the low-pressure fuel turbopump side of the engine. Each controller contains two redundant digital computer units, referred to as units A and B. Normally, A is in control, and unit B electronics are active, but not in control. Instructions to the engine control elements are updated 50 times per second (every 20 milliseconds). Engine reliability is enhanced by a dual-redundant system that allows normal digital computer unit operation after the first failure and a fail-safe shutdown after a second failure. High-reliability electronic parts are used throughout the controller. The digital computer is programmable, allowing engine control equations and constants to be modified by changing the software.

The controller is packaged in a sealed, pressurized chassis and is cooled by convection heat transfer through pin fins as part of the main chassis. The electronics are distributed on functional modules with special thermal and vibration protection.

Operating in conjunction with engine sensors, valves, actuators, and spark igniters, the controllers form a self-contained system for engine control, checkout, and monitoring. The controller provides engine flight readiness verification, engine start and shutdown sequencing, closed-loop thrust and

propellant mixture ratio control, sensor excitation, valve actuator and spark igniter control signals, engine performance limit monitoring, and performance and maintenance data. The controller also provides onboard engine checkout, response to vehicle commands, and transmission of engine status.

Controller power is supplied by the three ac buses in a manner that protects their redundancy. Each computer unit within a controller receives its power from a different bus. The buses are distributed among the three controllers such that the loss of any two buses will result in the loss of only one engine. The digital computer units require all three phases of an ac bus to operate. There are two *MPS ENGINE POWER* switches on panel R2 for each engine controller (*LEFT, CTR, RIGHT*); the top switch is for digital computer unit A, and the bottom switch is for digital computer unit B. Cycling an *MPS ENGINE POWER* switch to *OFF* and back to *ON* will cause the affected digital computer unit to stop processing.

Internal electrical heaters provide environmental temperature control for the controller. The heaters are powered by main buses through a remote power controller. The heaters are controlled by the *MAIN PROPULSION SYSTEM ENGINE CNTLR HTR LEFT, CTR, RIGHT* switches on panel R4. The heaters are not normally used until after MECO. They are only turned on if environmental control is required during the mission.

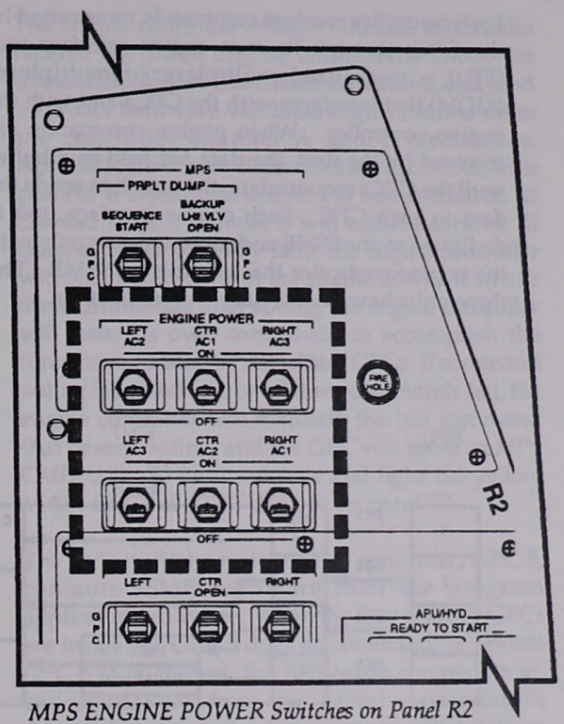

MPS ENGINE POWER Switches on Panel R2

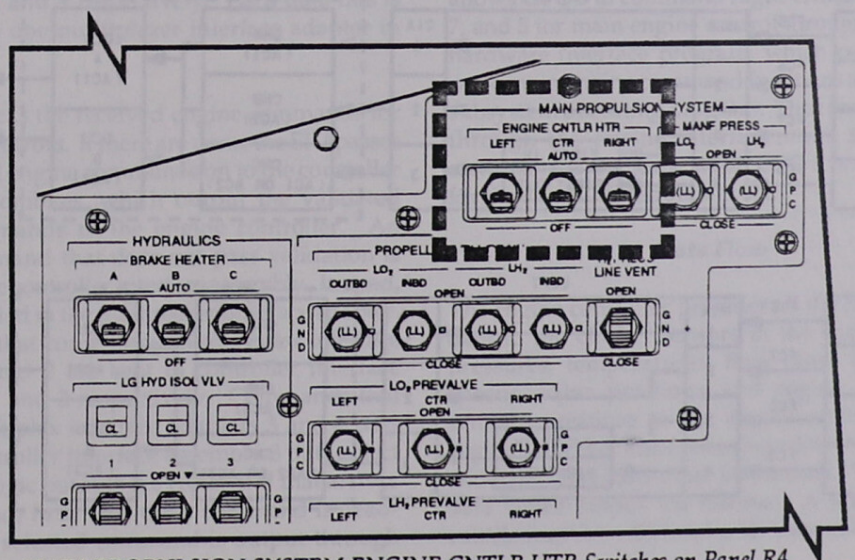

MAIN PROPULSION SYSTEM ENGINE CNTLR HTR Switches on Panel R4

Command and Data Flow

Command Flow

Each controller receives commands transmitted by the GPCs through its own engine interface unit (EIU), a specialized multiplexer/demultiplexer (MDM) that interfaces with the GPCs and with the engine controller. When engine commands are received by the unit, the data are held in a buffer until the GPCs request data; the unit then sends the data to each GPC. Each engine interface unit is dedicated to one SSME and communicates only with the engine controller that controls its SSME. The three units have no interface with each other.

The engine interface units are powered through the *EIU* switches on panel O17. If a unit loses power, its corresponding engine cannot receive any throttle, shut down, or dump commands, and will not be able to communicate with the GPCs. As a result, the controller will maintain the last valid command until it is shut down manually via the *MPS ENGINE POWER* switches on panel R2.

Each orbiter GPC, operating in a redundant set, issues engine commands from resident SSME subsystem operating programs to the EIUs for transmission to their corresponding engine controllers. Engine commands are output over the GPC's assigned flight-critical data bus (a total of

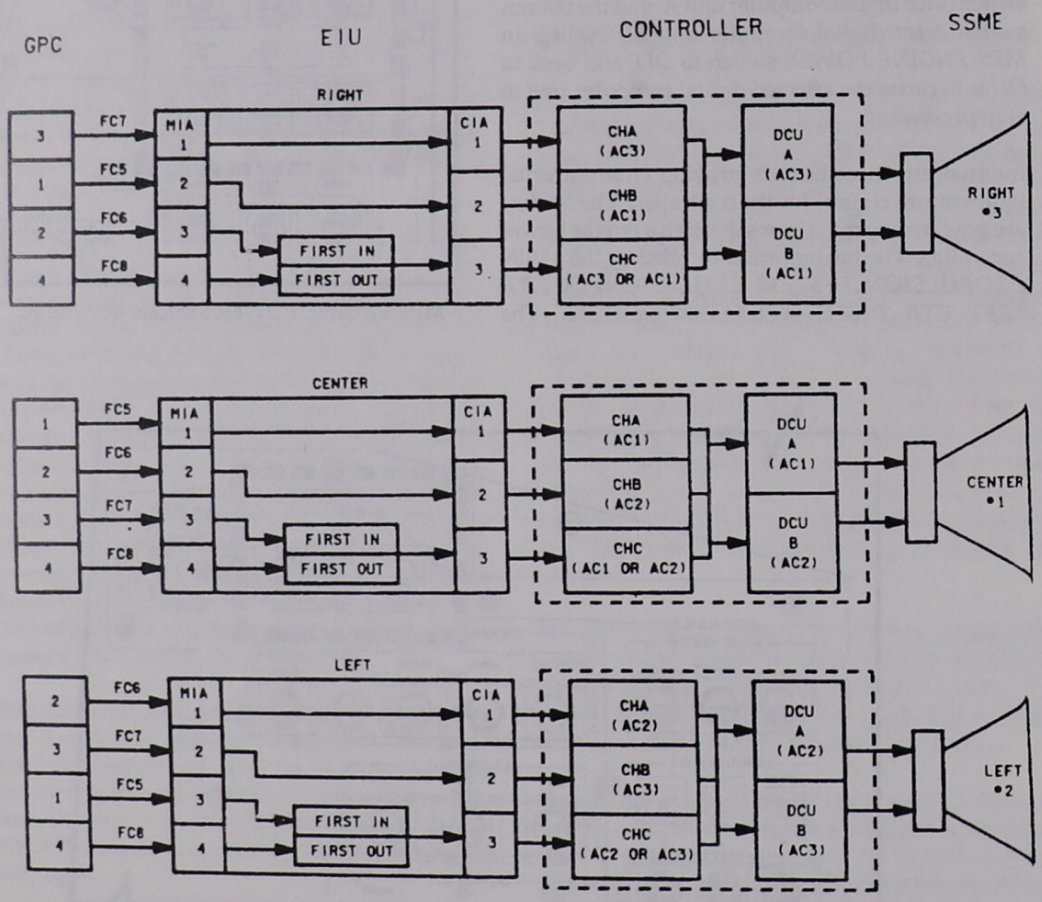

Main Engine Command Flow

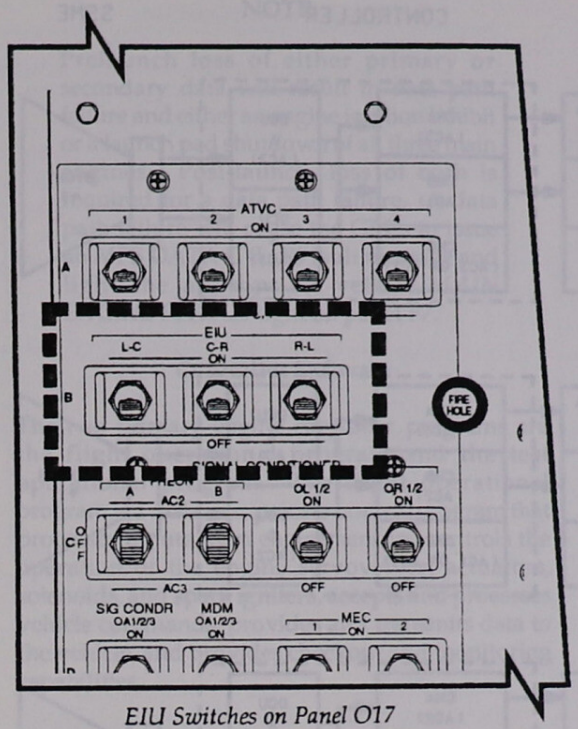

EIU Switches on Panel O17

four GPCs outputting over four flight-critical data buses). Therefore, each EIU will receive four commands. The nominal ascent configuration has GPCs 1, 2, 3, and 4 outputting on flight-critical data buses 5, 6, 7, and 8 respectively. Each data bus is connected to one multiplexer interface adapter in each EIU.

The EIU checks the received engine commands for transmission errors. If there are none, the EIU passes the validated engine commands on to the controller interface assemblies, which output the validated engine commands to the engine controller. An engine command that does not pass validation is not sent to the controller interface assembly. Instead, it is dead-ended in the multiplexer interface adapter. Commands that come through multiplex interface adapters 1 and 2 are sent to controller interface assemblies 1 and 2 respectively. Commands that come to multiplex interface adapters 3 and 4 pass through controller interface assembly 3 data-select logic. This logic outputs the command that arrives at the interface first. The other command is dead-ended. The selected command is output through controller interface assembly 3. In this manner, the EIU reduces the four input commands to three output commands.

The engine controller vehicle interface electronics receive the three engine commands, check for transmission errors (hardware validation), and send controller hardware-validated engine commands to the controller channel A and B electronics. Normally, channel A electronics are in control, with channel B electronics active, but not in control. If channel A fails, channel B will assume control. If channel B subsequently fails, the engine controller will pneumatically shut the engine down. If two or three commands pass voting, the engine controller will issue its own commands to accomplish the function requested by the orbiter GPCs. If command voting fails, and two or all three commands fail, the engine controller will maintain the last command that passed voting, and the GPC will issue an MPS CMD C (L, R) fault message and light the yellow *MAIN ENGINE STATUS* light on panel F7.

The backup flight system (BFS) computer, GPC 5, contains SSME hardware interface program applications software. When the four primary GPCs are in control, GPC 5 does no commanding. When GPC 5 is in control, the BFS sends commands to, and requests data from, the engine interface unit; in this configuration, the four primary GPCs neither command nor listen. The BFS, when engaged, allows GPC 5 to command flight-critical buses 5, 6, 7, and 8 for main engine control through the SSME hardware interface program, which performs the same main engine command functions as the SSME subsystem operating program. The command flow through the engine interface units and engine controllers is the same when GPC 5 is engaged as for the four-GPC redundant set.

Data Flow

The engine controller provides all the main engine data to the GPCs. Sensors in the engine supply pressures, temperatures, flow rates, turbopump speeds, valve positions, and engine servovalve actuator positions to the engine controller. The engine controller assembles these data into a vehicle data table and adds other status data. The vehicle data tables output via channels A and B to the vehicle interface electronics for transmission to the

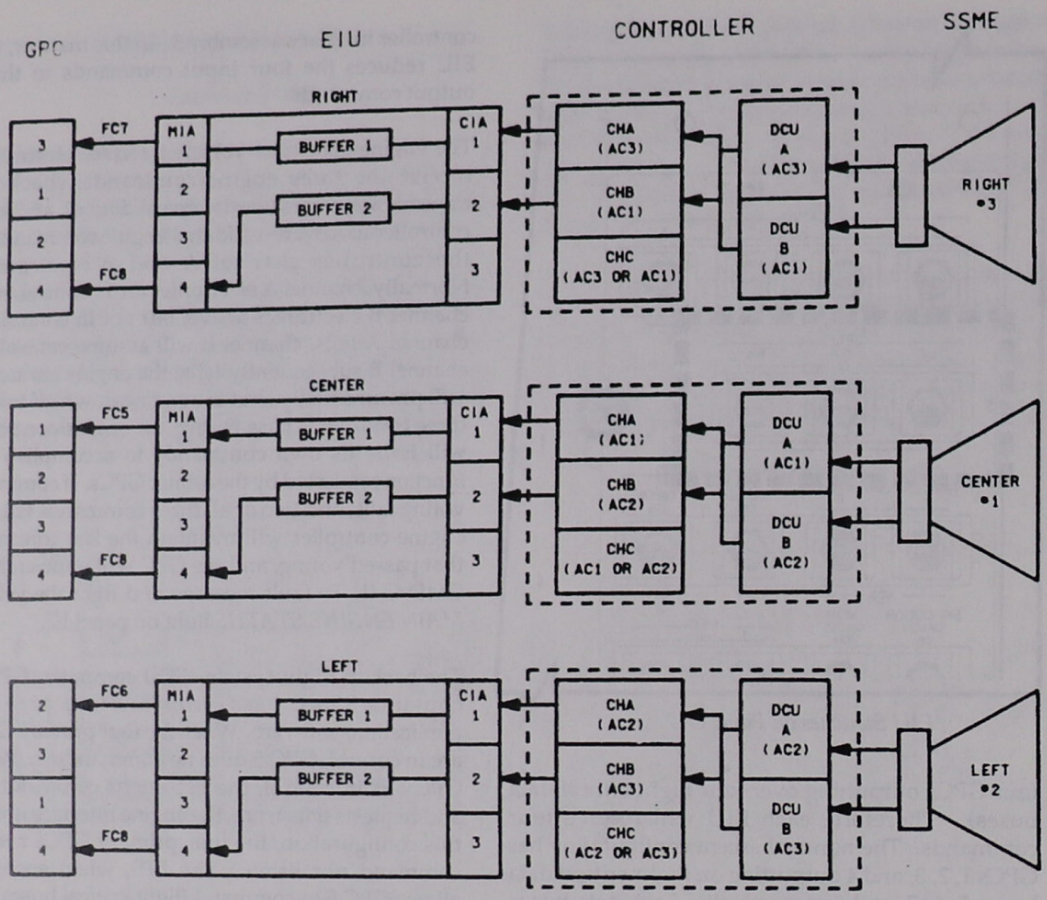

Main Engine Data Flow

engine interface units. The vehicle interface electronics output data over both the primary and secondary data paths.

The vehicle data table is sent by the controller to the engine interface unit. There are only two data paths versus three command paths between the engine controller and the engine interface unit. The data path that interfaces with controller interface assembly 1 is called primary data. Primary data consist of the first 32 words of the SSME vehicle data table. Secondary data is the path that interfaces with controller interface assembly 2. Secondary data consist of the first six words of the vehicle data table. Primary and secondary data are held in buffers until the GPCs send a primary and secondary data request command to the engine interface units. Primary data are output only through multiplex interface adapter 1 on each engine interface unit. Secondary data are output only through multiplex interface adapter 4 on each engine interface unit.

At T minus zero, the orbiter GPCs request both primary and secondary data from each engine interface unit. For no failures, only primary data are looked at. If there is a loss of primary data (which can occur between the engine controller channel A electronics and the SSME subsystem operating procedure), only the secondary data are transmitted to the GPCs.

NOTE

Prelaunch loss of either primary or secondary data will result in data path failure and either an engine ignition inhibit or a launch pad shutdown of all three main engines. Post-launch, loss of both is required for a data path failure. A data path failure will cause the GPCs to issue an MPS DATA C (L, R) fault message and light the appropriate yellow *MAIN ENGINE STATUS* light on panel F7.

Controller Software

The two primary engine controller programs are the flight operational program and the test operational program. The flight operational program is a real-time, process-control program that processes inputs from engine sensors, controls the operation of the engine servovalves, actuators, solenoids, and spark igniters, accepts and processes vehicle commands, provides and transmits data to the vehicle, and provides checkout and monitoring capabilities.

The test operational program supports engine testing prior to launch. Functionally, it is similar to the flight operational program but differs in implementation. The programs are modular and are defined as computer program components. Each consists of a data base organized into tables. During application of the computer program components, the programs perform data processing for failure detection and status of the vehicle. As system operation progresses through an operating phase, combinations of control functions are operative at different times. These combinations within a phase are defined as operating modes.

The checkout phase initiates active control monitoring or checkout. The standby mode in this phase puts the controller on pause while active control sequence operations are in process. Monitoring functions that do not affect engine hardware status are continually active during this mode. Such functions include processing vehicle commands, updating engine status, and self-testing the controller. During checkout, data and instructions can be loaded into the engine controller's computer memory, permitting updates to the software and data as necessary to proceed with engine-firing or checkout operations. Component checkout is also performed during this mode.

The start preparation phase consists of system purges and propellant conditioning in preparation for engine start. Purge sequence 1 mode is the first. It includes oxidizer system and intermediate seal purge operation. Purge sequence 2 mode is the second purge sequence, including fuel system purge operation and the continuation of purges initiated during purge sequence 1. Purge sequence 3 mode includes propellant recirculation (bleed valve operation). Purge sequence 4 mode includes fuel system purges and indicates that the engine is ready to enter the start phase. The engine-ready mode occurs when proper engine thermal conditions for start have been attained, and other criteria for start have been satisfied, including a continuation of the purge sequence 4 mode.

The start phase covers engine ignition operations and scheduled open-loop operation of the propellant valves. The start initiation mode includes all functions before ignition confirm and the closing of the thrust control loop. During thrust buildup, the main combustion chamber pressure is monitored to verify closed-loop sequencing is in progress.

Main stage is automatically entered upon successful completion of the start phase. Mixture ratio control and thrust control are active.

The shutdown phase covers operations to reduce main combustion chamber pressure and drive all valves closed to effect full engine shutdown.

The post-shutdown phase is entered upon completion of SSME shutdown. During the terminate sequence, all propellant valves are closed, and all solenoid and torque motor valves are de-energized.

Propellant Management System (PMS)

Liquid hydrogen and liquid oxygen pass from the ET to the propellant management system. The PMS consists of manifolds, distribution lines, and valves. It also contains lines needed to transport gases from the engines to the external tank for pressurization.

During prelaunch activities, this subsystem is used to load liquid oxygen and liquid hydrogen into the external tank. After MECO, the PMS is used to complete a liquid oxygen and liquid hydrogen dump and vacuum inerting. It is also used for manifold repressurization during entry.

Propellant Manifolds

Two 17-inch-diameter MPS propellant feedline manifolds are located in the orbiter aft fuselage, one for liquid oxygen and one for liquid hydrogen. Each manifold interfaces with its respective line on the ET. Both manifolds interface with an 8-inch fill/drain line containing an inboard and outboard fill/drain valve in series. Inside the orbiter, the manifolds diverge into three 12-inch SSME feedlines, one for each engine.

Fluid pressures within the oxygen and hydrogen feedline manifolds can be monitored on the two MPS PRESS ENG MANF meters on panel F7 or on the BFS GNC SYS SUMM 1 display (MANF P LH2, LO2).

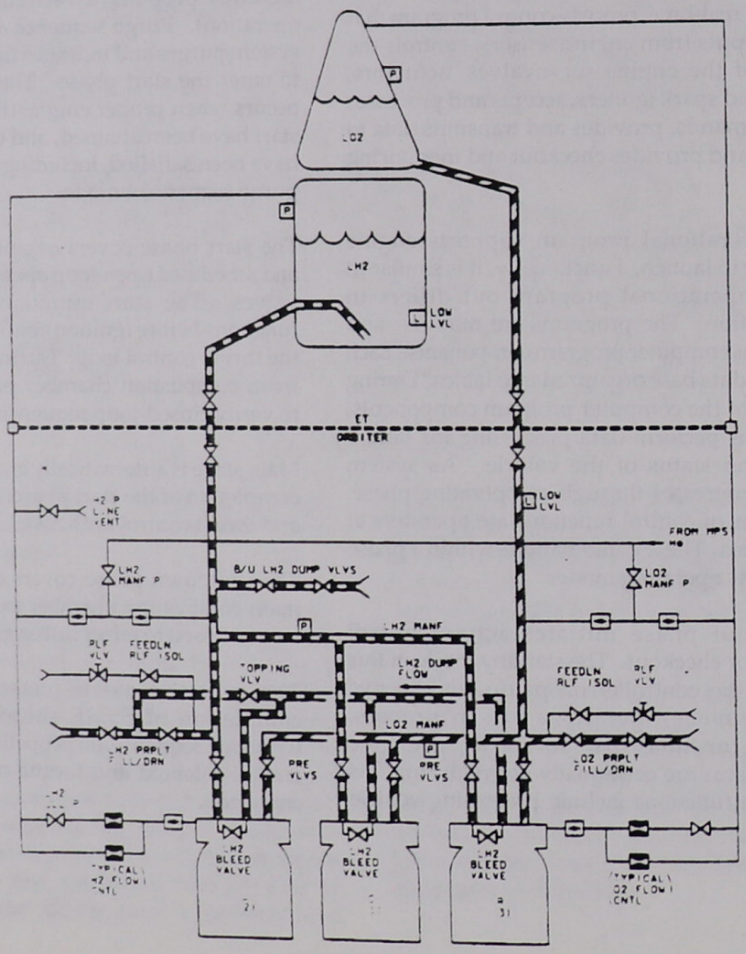

MPS Propellant Management System Schematic from the Ascent Pocket Checklist

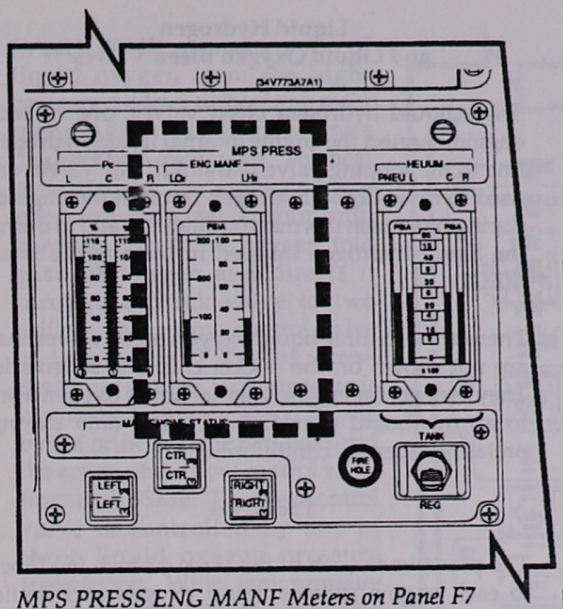

MPS PRESS ENG MANF Meters on Panel F7

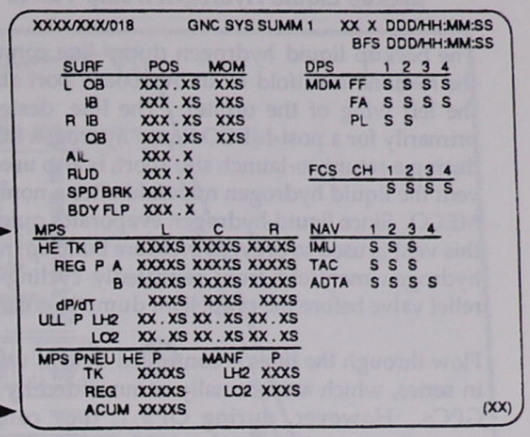

MPS Parameters on BFS GNC SYS SUMM 1 Display (DISP 18)

Feedline Disconnect Valves

Two disconnect valves are found in each feedline where the orbiter meets the external tank. One is on the orbiter side of the manifold, and the other is on the external tank side. All four are closed automatically prior to external tank separation.

Fill/Drain Valves

Two (outboard and inboard) 8-inch-diameter liquid oxygen and liquid hydrogen fill/drain valves are connected in series. They are used to load the external tank before launch and to vacuum inert the feedline manifolds during the post-MECO MPS propellant dump. The valves can be manually controlled by the *PROPELLANT FILL/DRAIN* LO_2, LH_2 *OUTBD, INBD* switches on panel R4. Each switch has *OPEN, GND,* and *CLOSE* positions.

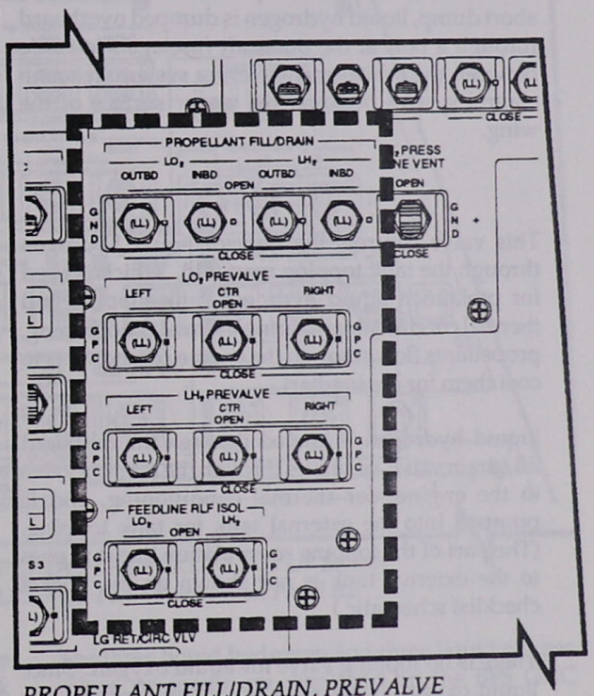

PROPELLANT FILL/DRAIN, PREVALVE and FEEDLINE RLF ISOL Switches on Panel R4

Relief Valves

Each 8-inch liquid hydrogen and liquid oxygen manifold has a 1-inch-diameter line that is routed to a feedline relief isolation valve and then to a feedline relief valve. When the feedline relief isolation valve is opened automatically after MECO, the corresponding manifold can relieve excessive pressure overboard through its relief valve. The relief isolation valves can also be manually controlled by the *MAIN PROPULSION SYSTEM FEEDLINE RLF ISOL* LO_2 and LH_2 switches on panel R4. The switches have *OPEN, GPC,* and *CLOSE* positions.

Backup Liquid Hydrogen Dump Valves

The backup liquid hydrogen dump line connects the feedline manifold to an overboard port above the left wing of the orbiter. The line, designed primarily for a post-MECO liquid hydrogen dump during a return-to-launch site abort, is also used to vent the liquid hydrogen manifold after a nominal MECO. Since liquid hydrogen evaporates quickly, this vent is used to prevent pressure buildup in the hydrogen manifold from repeatedly cycling the relief valve before the propellant dump begins.

Flow through the lines is controlled by two valves in series, which are normally commanded by the GPCs. However, during OPS 1, they can be manually controlled by the *MPS PRPLT DUMP BACKUP LH_2 VLV* switch on panel R2, which has *OPEN, GPC,* and *CLOSE* positions. In an RTLS abort dump, liquid hydrogen is dumped overboard through a port at the outer aft fuselage's left side between the orbital maneuvering system/reaction control system pod and the upper surface of the wing.

Topping Valve

This valve controls the flow of liquid hydrogen through the tank topping manifold, which is used for prelaunch liquid hydrogen tank topping and thermal conditioning. During thermal conditioning, propellants flow through the engine components to cool them for engine start.

Liquid hydrogen is loaded through the outboard fill/drain valve, circulates through the topping valve to the engines for thermal conditioning, and is pumped into the external tank for tank topping. (The part of the topping recirculation line that goes to the external tank is not shown on the pocket checklist schematic.)

There is no topping valve for liquid oxygen. Since liquid oxygen is harmless in the atmosphere, it is not circulated back to the external tank during thermal conditioning. Rather, it is dumped overboard through the engine liquid oxygen bleed valves and out the overboard bleed valve.

Liquid Hydrogen and Liquid Oxygen Bleed Valves

Three liquid hydrogen bleed valves, one in each engine, connect the engine internal liquid hydrogen line to the topping valve manifold. The valves are used to route liquid hydrogen through the engines during prelaunch thermal conditioning and to dump the liquid hydrogen trapped in the engines post-MECO.

There are also three liquid oxygen bleed valves that are not shown on the pocket checklist schematic. They connect the engine internal liquid oxygen lines to an overboard port and are used only during prelaunch thermal conditioning.

Prevalves

The prevalve in each of the three 12-inch feedlines to each engine isolates liquid oxygen and liquid hydrogen from each engine or permits liquid oxygen and liquid hydrogen to flow to each engine. Most of the prevalve functions are automatic, but they can also be controlled by the LO_2 and LH_2 *PREVALVE, LEFT, CTR, RIGHT* switches on panel R4. Each switch has *OPEN, GPC,* and *CLOSE* positions.

Ullage Pressure System

Ullage refers to the space in each tank not occupied by propellants. The ullage pressure system consists of the sensors, lines, and valves needed to route gaseous propellants from the three main engines and supply them to the external tank to maintain propellant tank pressure during engine operation.

There are two external tank pressurization manifolds, one for gaseous oxygen and one for gaseous hydrogen. During prelaunch, the manifolds are used to supply ground support pressurization of the ET using helium routed through the T-0 umbilical. Self-sealing quick disconnects are provided at the T-0 umbilical for separation at lift-off.

Each manifold contains three 0.63-inch-diameter pressurization lines, one from each engine. The three lines join in a common manifold prior to entering the ET.

In each SSME, a small portion of liquid oxygen from the high-pressure oxidizer turbopump main pump is diverted into the engine's oxidizer heat exchanger. The heat generated by the engine's high-pressure oxidizer turbopump converts the liquid oxygen into gaseous oxygen and directs it through a check valve to two orifices and a flow control valve and then to the ET. During ascent, the liquid oxygen tank pressure is maintained between 20 and 22 psig by the orifices in the two lines and the action of the flow control valve from each SSME. The flow control valve is controlled by one of three liquid oxygen pressure transducers. When tank pressure decreases below 20 psig, the valve opens. If the tank pressure is greater than 30 psig, it is relieved through the liquid oxygen tank's vent and relief valve.

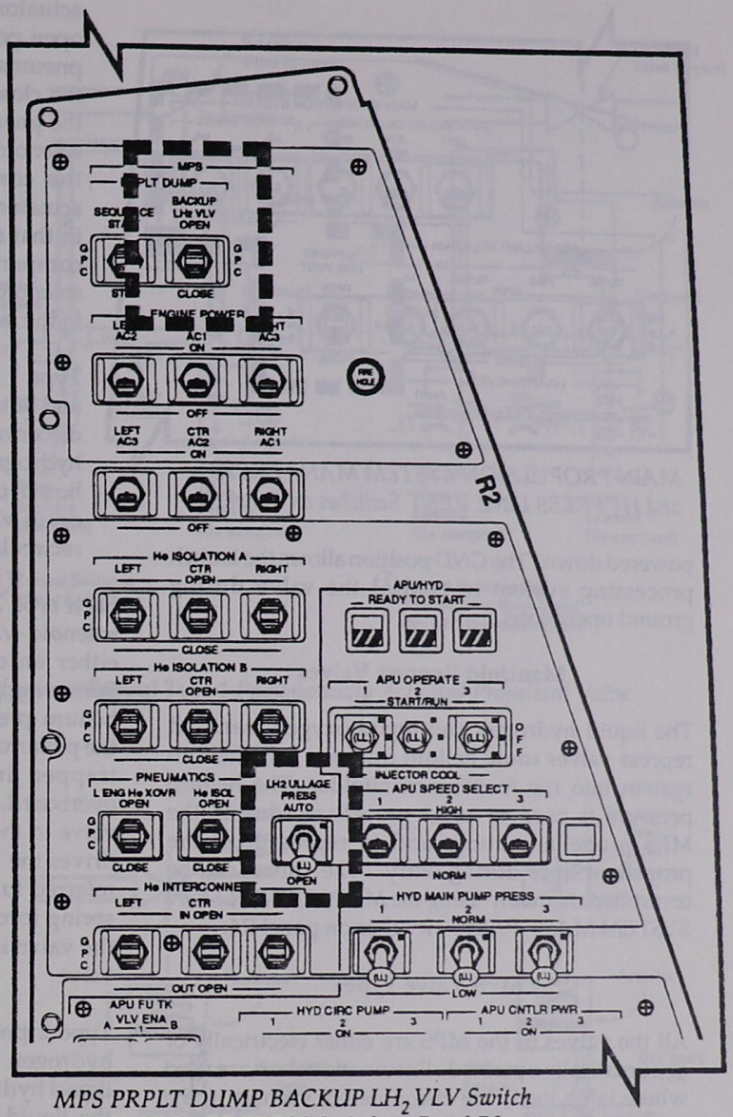

MPS PRPLT DUMP BACKUP LH_2 VLV Switch and LH_2 ULLAGE PRESS Switch on Panel R2

In each SSME, a small portion of gaseous hydrogen from the low-pressure fuel turbopump is directed through two check valves, two orifices, and a flow control valve before entering the ET. During ascent, the liquid hydrogen tank's pressure is maintained between 32 and 34 psia using both a variable and a fixed orifice in each SSME supply system. The active flow control valve is controlled by one of three liquid hydrogen pressure transducers. When the tank pressure decreases below 32 psia, the valve opens; when the tank pressure increases to 33 psia, the valve closes. If the tank pressure exceeds 35 psia, the pressure is relieved through the liquid hydrogen tank's vent and relief valve. If the pressure falls below 32 psia, the *LH2 ULLAGE PRESS* switch on panel R2 is positioned from *AUTO* to *OPEN*, causing all three flow control valves to go to full open. No ullage switch or active flow control valves are available for the liquid oxygen tank.

The three liquid hydrogen and three liquid oxygen ullage pressures are displayed on the BFS GNC SYS SUMM 1 display (ULL P).

The SSME/ET liquid hydrogen pressurization system also contains a line that is used to vent the liquid hydrogen pressurization manifold during inerting. It is controlled by the *H_2 PRESS LINE VENT* switch on panel R4. This valve is normally closed, and the switch is positioned to *OPEN* after the MPS dump is complete, and the system is

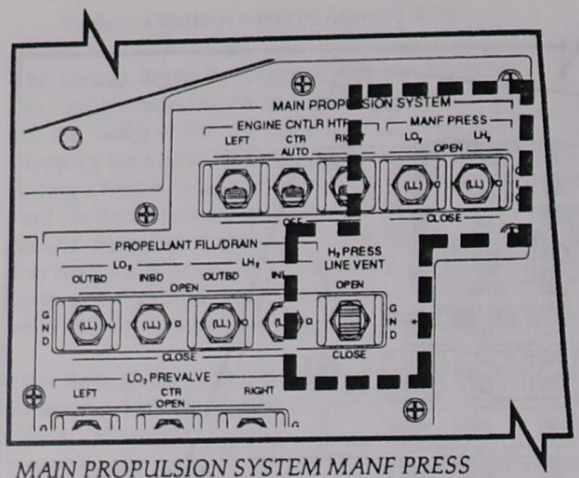

MAIN PROPULSION SYSTEM MANF PRESS and H_2 PRESS LINE VENT Switches on Panel R4

powered down. The *GND* position allows the launch processing system to control the valve during ground operations.

Manifold Repress Valves

The liquid hydrogen and liquid oxygen manifold repress valves route helium from the MPS helium system into the feedline manifolds. The helium pressure is used to expel propellants during the MPS propellant dump and to repressurize the propellant lines during entry. The valves can be controlled manually using the *MAIN PROPULSION SYSTEM MANF PRESS* switches on panel R4.

MPS Valve Types

All the valves in the MPS are either electrically or pneumatically operated. Pneumatic valves are used where large loads are encountered, such as in the control of liquid propellant flows. Electrical valves are used for lighter loads, such as the control of gaseous propellant flows.

The pneumatically actuated valves are divided into two types: type 1, which requires pneumatic pressure to open and close the valve, and type 2, which is spring-loaded to one position and requires pneumatic pressure to move to the other position.

Each type 1 valve actuator is equipped with two electrically actuated solenoid valves, which control helium pressure to an "open" or "close" port on the actuator. Energizing the solenoid valve on the open port allows helium pressure to open the pneumatic valve. Energizing the solenoid on the close port allows helium pressure to close the pneumatic valve. Removing power from a solenoid valve removes helium pressure from the corresponding port of the pneumatic actuator and allows the helium pressure trapped in that side of the actuator to vent into the aft compartment. Removing power from both solenoids allows the pneumatic valve to remain in the last commanded position.

Type 1 valves are used for the liquid oxygen and liquid hydrogen feedline 17-inch umbilical disconnect valves, the liquid oxygen and liquid hydrogen prevalves, the liquid hydrogen and liquid oxygen inboard and outboard fill and drain valves, and the liquid hydrogen 4-inch recirculation disconnect valves.

Each type 2 valve is a single electrically actuated solenoid valve that controls helium pressure to either an open or a close port on the actuator. Removing power from the solenoid valve removes helium pressure from the corresponding port of the pneumatic actuator and allows helium pressure trapped in that side of the actuator to vent overboard. Spring force takes over and drives the valve to the opposite position. If the spring force drives the valve to the open position, the valve is referred to as a normally open (NO) valve. If the spring force drives the valve to a closed position, the valve is referred to as a normally closed (NC) valve.

Type 2 pneumatic valves are used for the liquid hydrogen RTLS inboard dump valve (NC), the liquid hydrogen RTLS outboard dump valve (NC), the liquid hydrogen feedline relief shutoff valve (NO), the liquid oxygen feedline relief shutoff valve (NO), the three liquid hydrogen engine recirculation valves (NC), the two liquid oxygen pogo recirculation valves (NO), the liquid hydrogen topping valve (NC), the liquid hydrogen high-point bleed valve (NC), and the liquid oxygen overboard bleed valve (NO).

The electrically actuated solenoid valves are spring-loaded to one position and move to the other position when electrical power is applied. These valves also are referred to as either normally open or normally closed, depending on their position in

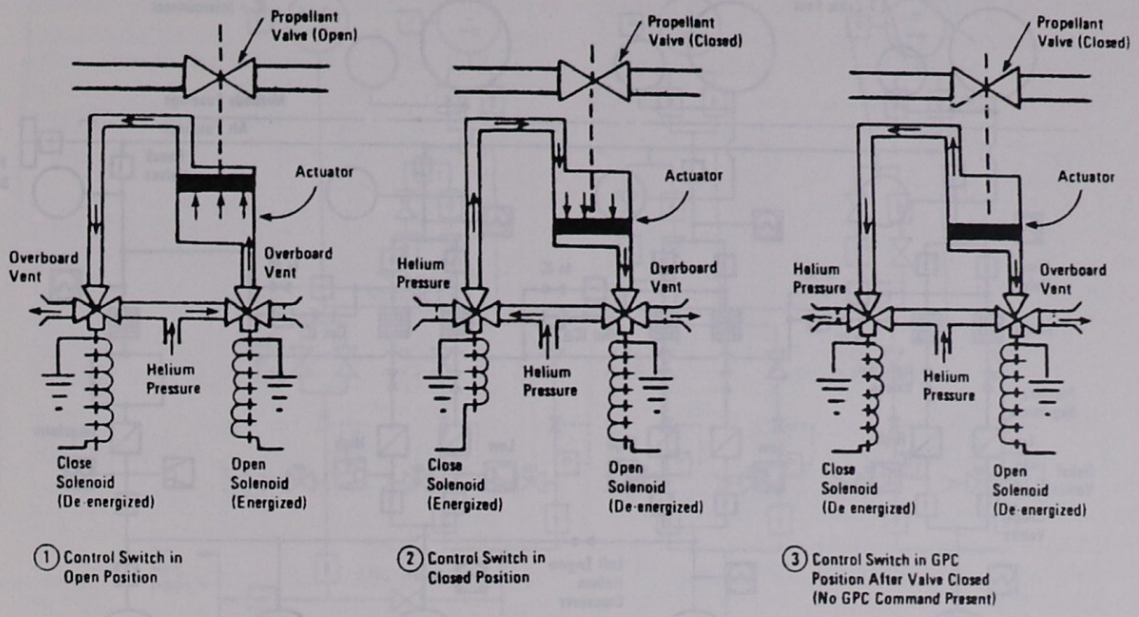

Propellant Management Subsystem Typical Type 1 Pneumatically Actuated Propellant Valve

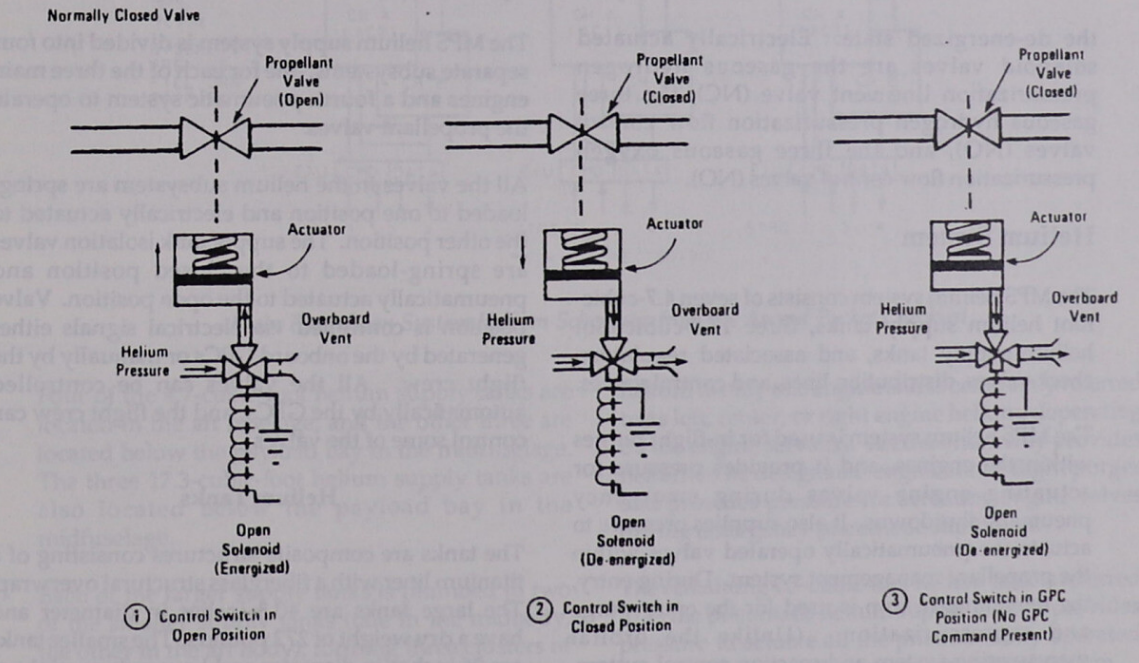

Propellant Management Subsystem Typical Type 2 Pneumatically Actuated Propellant Valve

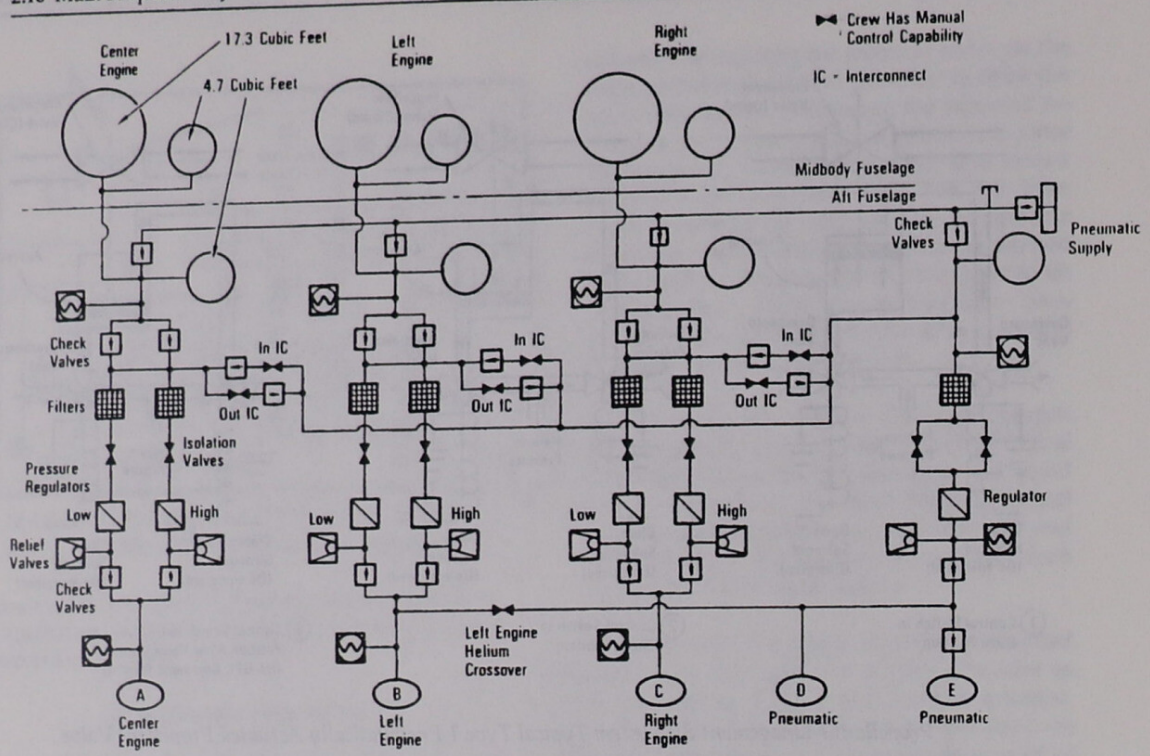

Helium System Storage and Supply

the de-energized state. Electrically actuated solenoid valves are the gaseous hydrogen pressurization line vent valve (NC), the three gaseous hydrogen pressurization flow control valves (NO), and the three gaseous oxygen pressurization flow control valves (NO).

Helium System

The MPS helium system consists of seven 4.7-cubic-foot helium supply tanks, three 17.3-cubic-foot helium supply tanks, and associated regulators, check valves, distribution lines, and control valves.

The MPS helium system is used for in-flight purges within the engines, and it provides pressure for actuating engine valves during emergency pneumatic shutdowns. It also supplies pressure to actuate the pneumatically operated valves within the propellant management system. During entry, the remaining helium is used for the entry purge and repressurization. (Unlike the orbital maneuvering system and reaction control system, the MPS does not use helium to pressurize propellant tanks.)

The MPS helium supply system is divided into four separate subsystems, one for each of the three main engines and a fourth pneumatic system to operate the propellant valves.

All the valves in the helium subsystem are spring-loaded to one position and electrically actuated to the other position. The supply tank isolation valves are spring-loaded to the closed position and pneumatically actuated to the open position. Valve position is controlled via electrical signals either generated by the onboard GPCs or manually by the flight crew. All the valves can be controlled automatically by the GPCs, and the flight crew can control some of the valves.

Helium Tanks

The tanks are composite structures consisting of a titanium liner with a fiberglass structural overwrap. The large tanks are 40.3 inches in diameter and have a dry weight of 272 pounds. The smaller tanks are 26 inches in diameter and have a dry weight of 73 pounds. The tanks are serviced before lift-off to a pressure of 4,100 to 4,500 psi.

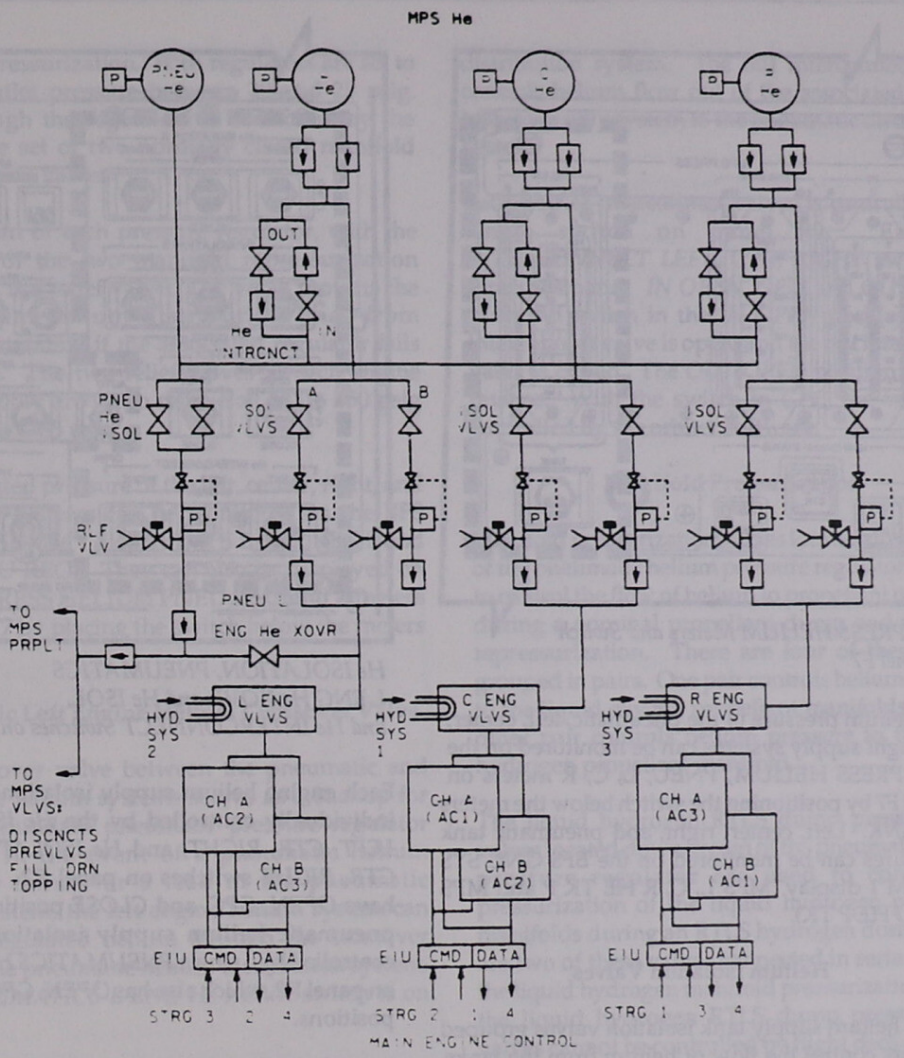

Main Propulsion System Helium Schematic from the Ascent Pocket Checklist

Four of the 4.7-cubic-foot helium supply tanks are located in the aft fuselage, and the other three are located below the payload bay in the midfuselage. The three 17.3-cubic-foot helium supply tanks are also located below the payload bay in the midfuselage.

Each of the larger supply tanks is plumbed to two of the smaller supply tanks (one in the midbody, the other in the aft body), forming three clusters of three tanks. Each set of tanks normally provides helium to only one engine and is commonly referred to as left, center, or right engine helium, depending on the engine serviced. Each set normally provides helium to its designated engine for in-flight purges and provides pressure for actuating engine valves during emergency pneumatic shutdown.

The remaining 4.7-cubic-foot helium tank is referred to as the pneumatic helium supply tank. It provides pressure to actuate all the pneumatically operated valves in the propellant management subsystem.

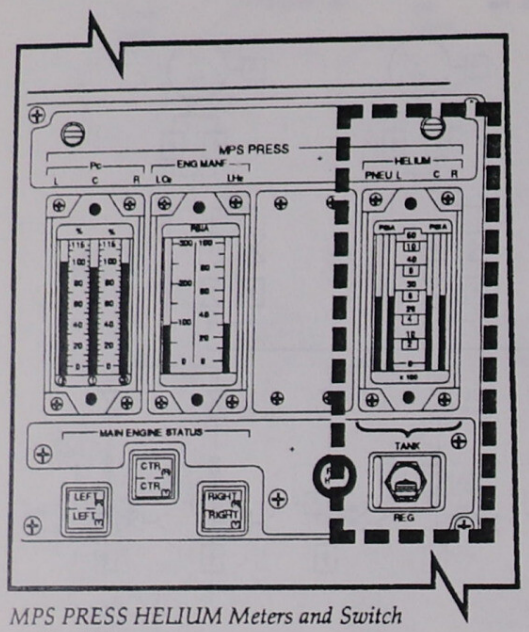

MPS PRESS HELIUM Meters and Switch on Panel F7

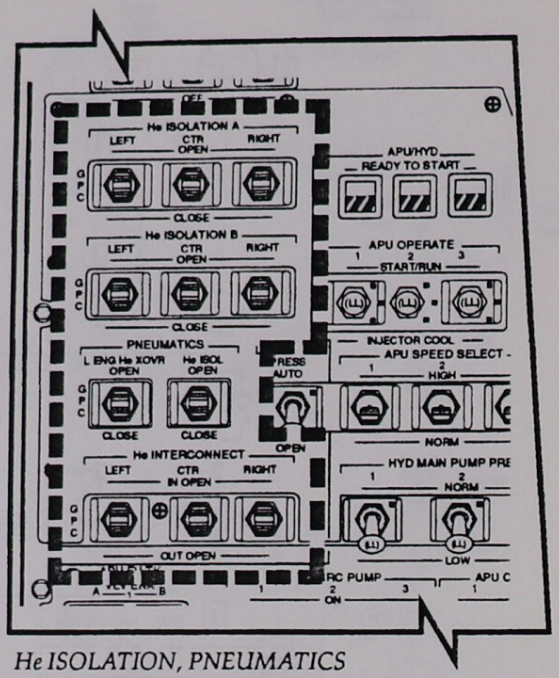

He ISOLATION, PNEUMATICS L ENG He XOVR and He ISOL, and He INTERCONNECT Switches on Panel R2

The helium pressure of the pneumatic, left, center, and right supply systems can be monitored on the MPS PRESS HELIUM, PNEU, L, C, R meters on panel F7 by positioning the switch below the meters to *TANK*. Left, center, right, and pneumatic tank pressures can be monitored on the BFS GNC SYS SUMM 1 display (MPS L, C, R HE TK P and MPS PNEU HE P TK).

Helium Isolation Valves

Eight helium supply tank isolation valves grouped in pairs control the flow of helium from the tanks. One pair of valves is connected to each of the three tank clusters, and one pair is connected to the pneumatic supply tank. In the engine helium supply tank system, each pair of isolation valves is connected in parallel, with each valve in the pair controlling helium flow through one leg of a dual-redundant helium supply circuit. Each helium supply circuit contains two check valves, a filter, an isolation valve, a regulator, and a relief valve.

The two isolation valves connected to the pneumatic supply tanks are also connected in parallel. The rest of the pneumatic supply system consists of a filter, the two isolation valves, a regulator, a relief valve, and a single check valve.

Each engine helium supply isolation valve can be individually controlled by the *He ISOLATION A LEFT, CTR, RIGHT*, and *He ISOLATION B LEFT, CTR, RIGHT* switches on panel R2. The switches have *OPEN, GPC*, and *CLOSE* positions. The two pneumatic helium supply isolation valves are controlled by a single *PNEUMATICS He ISOL* switch on panel R2, which also has *OPEN, GPC*, and *CLOSE* positions.

Helium Pressure Regulators

Each engine helium supply tank has two pressure regulators operating in parallel. Each regulator controls pressure to within 730 to 785 psia in one leg of a dual-redundant helium supply circuit and is capable of providing all the helium needed by the main engines.

The pressure regulator for the pneumatic helium supply system is not redundant and regulates outlet pressure between 715 to 770 psig. Downstream of the pneumatic regulator are the liquid hydrogen manifold pressure regulator and the liquid oxygen manifold pressure regulator. These regulators are used only during MPS propellant dumps and

manifold pressurization. Both regulators are set to provide outlet pressure between 20 and 25 psig. Flow through the regulators is controlled by the appropriate set of two normally closed manifold pressurization valves.

Downstream of each pressure regulator, with the exception of the two manifold repressurization regulators, is a relief valve. The valve protects the downstream helium distribution lines from overpressurization if the associated regulator fails fully open. The two relief valves in each engine helium supply are set to relieve at 790 to 850 psig and reseat at 785 psig.

The regulated pressure of the left, center, right, and pneumatic systems can be monitored on the BFS GNC SYS SUMM 1 display (MPS L, C, R REG P and MPS PNEU REG). They can also be displayed on the MPS PRESS HELIUM PNEU, L, C, and R meters on panel F7 by placing the switch below the meters to *REG*.

Pneumatic Left Engine Helium Crossover Valve

The crossover valve between the pneumatic and left engine helium systems serves as a backup for the nonredundant pneumatic pressure regulator system. In the event of a pneumatic helium regulator failure or a leak in the pneumatic helium system, the left engine helium system can provide regulated helium through the crossover valve to the pneumatic helium distribution system. The *PNEUMATICS L ENG He XOVR* switch is on panel R2.

Helium Interconnect Valves

Normally, each of the four helium supply systems operates independently until after MECO. Each engine helium supply has two interconnect (crossover) valves associated with it, and each valve in the pair of interconnect valves is connected in series with a check valve. The check valves allow helium to flow through the interconnect valves in one direction only. One check valve associated with one interconnect valve controls helium flow in one direction, and the other interconnect valve and its associated check valve permit helium flow in the opposite direction. The in interconnect valve controls helium flow into the associated engine helium distribution system from the pneumatic distribution system. The out interconnect valve controls helium flow out of the associated engine helium supply system to the pneumatic distribution system.

Each pair of interconnect valves is controlled by a single switch on panel R2. Each *He INTERCONNECT LEFT, CTR, RIGHT* switch has three positions: *IN OPEN, GPC,* and *OUT OPEN*. With the switch in the *IN OPEN* position, the in interconnect valve is open, and the out interconnect valve is closed. The *OUT OPEN* position does the reverse. With the switch in *GPC*, the valves are controlled by the orbiter software.

Manifold Pressurization

Manifold pressurization valves located downstream of the pneumatic helium pressure regulator are used to control the flow of helium to propellant manifolds during a nominal propellant dump and manifold repressurization. There are four of these valves grouped in pairs. One pair controls helium pressure to the liquid oxygen propellant manifolds, and the other pair controls helium pressure to the liquid hydrogen propellant manifold.

The liquid hydrogen RTLS dump pressurization valves located downstream of the pneumatic helium pressure regulator are used to control the pressurization of the liquid hydrogen propellant manifolds during an RTLS hydrogen dump. There are two of these valves connected in series. Unlike the liquid hydrogen manifold pressurization valves, the liquid hydrogen RTLS dump pressurization valves cannot be controlled by flight deck switches. During an RTLS abort, these valves are opened and closed automatically by GPC commands.

An additional difference between the nominal and the RTLS liquid hydrogen dumps is in the routing of the helium and the point at which it enters the liquid hydrogen feedline manifold. For the nominal liquid hydrogen dump, helium passes through the liquid hydrogen manifold pressurization valves and enters the feedline manifold in the vicinity of the liquid hydrogen feedline disconnect valve. For the liquid hydrogen RTLS dump, helium passes through the RTLS liquid hydrogen dump pressurization valves and enters the feedline manifold in the vicinity of the liquid hydrogen inboard fill and drain valve on the inboard side.

There is no RTLS liquid oxygen dump pressurization valve, since the liquid oxygen manifold is not pressurized during the RTLS liquid oxygen dump.

Pneumatic Control Assemblies

There is one pneumatic control assembly on each SSME. The assembly is essentially a manifold pressurized by one of the engine helium supply systems and contains solenoid valves to control and direct pressure to perform various essential functions. The valves are energized by discrete ON/OFF commands from the output electronics of the SSME controller. Functions controlled by the pneumatic control assembly include the high-pressure oxidizer turbopump intermediate seal cavity and preburner oxidizer dome purge, pogo system postcharge, and pneumatic shutdown.

MPS Hydraulic Systems

Hydraulic System Operation

The three orbiter hydraulic systems (see Section 2.1 for details on the hydraulic system) supply hydraulic pressure to the SSME to provide thrust vector control and actuate engine valves on each SSME. The three hydraulic supply systems are distributed to the thrust vector control (TVC) valves. These valves are controlled by *HYDRAULICS MPS/TVC ISOL VLV* switches (one for each of the three hydraulic systems) on panel R4. A valve is opened by positioning its switch to *OPEN*. The talkback indicator above each switch indicates *OP* when the valve is open and *CL* when it is closed.

When the three MPS TVC hydraulic isolation valves are opened, hydraulic pressure actuates the engine main fuel valve, the main oxidizer valve, the fuel preburner oxidizer valve, the oxidizer preburner oxidizer valve, and the chamber coolant valve. All hydraulically actuated engine valves on an engine receive hydraulic pressure from the same hydraulic

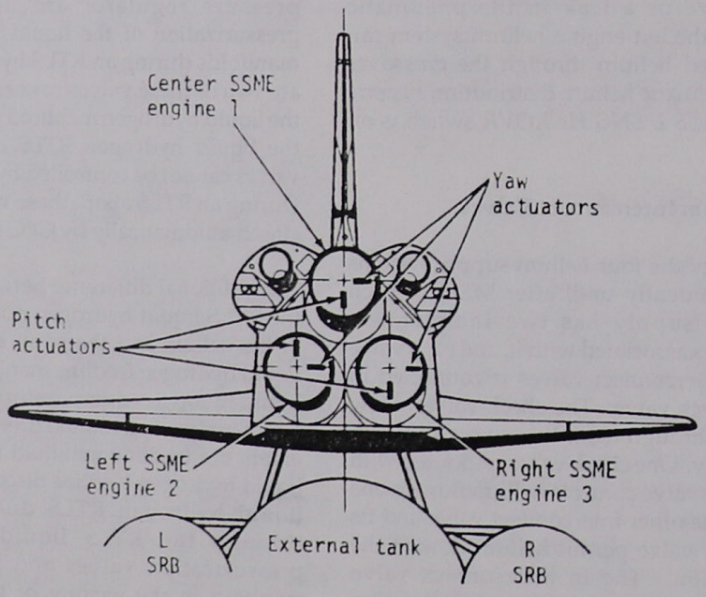

Main Engine Gimbal Actuators

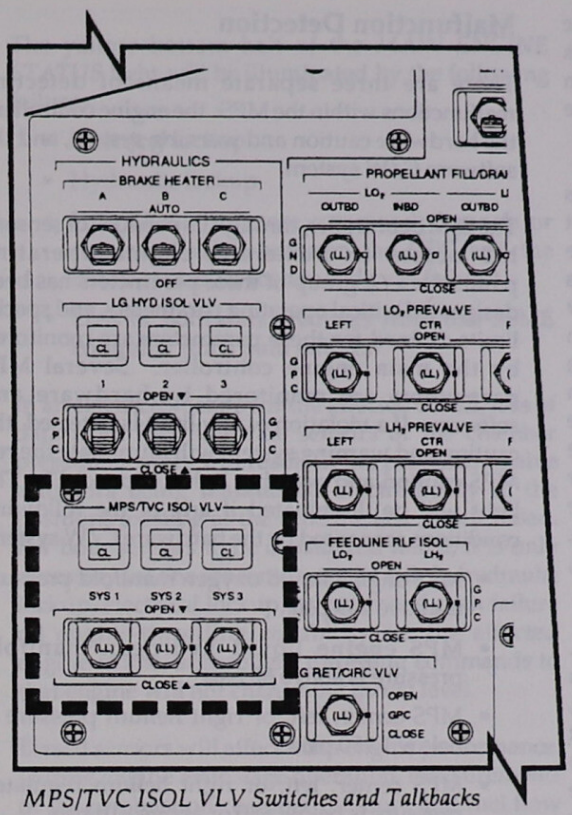

MPS/TVC ISOL VLV Switches and Talkbacks on Panel R4

system. The left engine valves are actuated by hydraulic system 2, the center engine valves are actuated by hydraulic system 1, and the right engine valves are actuated by hydraulic system 3. Each engine valve actuator is controlled by dual-redundant signals: channel A/engine servovalve 1 and channel B/engine servovalve 2 from that engine's controller electronics. As a backup, all the hydraulically actuated engine valves on an engine are supplied with helium pressure from the helium subsystem left, center, and right engine helium tank supply system.

Hydraulic Lockup

Hydraulic lockup is a condition in which all the propellant valves on an engine are hydraulically locked in a fixed position. This is a built-in protective response of the SSME valve actuator/control circuit. It takes effect any time low hydraulic pressure or loss of control of one or more propellant valve actuators renders closed-loop control of engine thrust or propellant mixture ratio impossible. Hydraulic lockup allows an engine to continue to burn in a safe condition. The affected engine will continue to operate at the approximate power level in effect at the time hydraulic lockup occurred. Once an engine is in a hydraulic lockup, any subsequent shutoff commands, whether nominal or premature, will cause a pneumatic engine shutdown. Hydraulic lockup does not affect the capability of the engine controller to monitor critical operating parameters or issue an automatic shutdown if an operating limit is out of tolerance, but the engine shutdown would be accomplished pneumatically.

Thrust Vector Control

The three MPS thrust vector control valves must also be opened to supply hydraulic pressure to the six main engine TVC actuators. There are two servoactuators per SSME: one for yaw and one for pitch. Each actuator is fastened to the orbiter thrust structure and to the powerheads of the three SSMEs.

Two actuators per engine provide attitude control and trajectory shaping by gimbaling the SSMEs in conjunction with the solid rocket boosters during first-stage and without the solid rocket boosters during second-stage ascent. Each SSME servoactuator receives hydraulic pressure from two of the three orbiter hydraulic systems; one system is the primary system, and the other is a standby system. Each servoactuator has its own hydraulic switching valve. The switching valve receives hydraulic pressure from two of the three orbiter hydraulic systems and provides a single source to the actuator.

Normally, the primary hydraulic supply is directed to the actuator; however, if the primary system were to fail and lose hydraulic pressure, the switching valve would automatically switch over to the standby system, and the actuator would continue to function. The left engine's pitch actuator uses hydraulic system 2 as the primary and hydraulic system 1 as the standby. The engine's yaw actuator uses hydraulic system 1 as the primary and hydraulic system 2 as the standby. The center engine's pitch actuator uses hydraulic system 1 as the primary and hydraulic system 3 as the standby, and the yaw actuator uses hydraulic system 3 as the primary and hydraulic system 1 as the standby.

The right engine's pitch actuator uses hydraulic system 3 as the primary and hydraulic system 2 as the standby. Its yaw actuator uses hydraulic system 2 as the primary and hydraulic system 3 as the standby.

The SSME servoactuators change each main engine's thrust vector direction as needed during the flight sequence. The three pitch actuators gimbal the engine up or down a maximum of 10.5 degrees from the installed null position. The three yaw actuators gimbal the engine left or right a maximum of 8.5 degrees from the installed position. The installed null position for the left and right main engines is 10 degrees up from the X axis in a negative Z direction and 3.5 degrees outboard from the engine centerline parallel to the X axis. The center engine's installed null position is 16 degrees above the X axis for pitch and on the X axis for yaw. When any engine is installed in the null position, the other engines do not come in contact with it.

There are three actuator sizes for the main engines. The piston area of the center engine upper pitch actuator is 24.8 square inches, its stroke is 10.8 inches, it has a peak flow of 50 gallons per minute, and it weighs 265 pounds. The piston area of the two lower pitch actuators is 20 square inches, their stroke is 10.8 inches, their peak flow is 45 gallons per minute, and they weigh 245 pounds. All three yaw actuators have a piston area of 20 square inches, a stroke of 8.8 inches, a peak flow of 45 gallons per minute, and weigh 240 pounds. The minimum gimbal rate is 10 degrees per second; the maximum rate is 20 degrees per second.

Detailed information about ascent thrust vector control is provided in Section 2.13.

Hydraulic System Isolation On Orbit

The *HYDRAULICS MPS/TVC ISOL VLV SYS 1, SYS 2,* and *SYS 3* switches on panel R4 are positioned to *CLOSE* during on-orbit operations to protect against hydraulic leaks downstream of the isolation valves. In addition, there is no requirement to gimbal the main engines from the stow position. During on-orbit operations when the MPS TVC valves are closed, the hydraulic pressure supply and return lines within each MPS TVC component are interconnected to enable hydraulic fluid to circulate for thermal conditioning.

Malfunction Detection

There are three separate means of detecting malfunctions within the MPS: the engine controllers, the hardware caution and warning system, and the software C/W system.

The SSME controller, through its network of sensors, has access to numerous engine operating parameters. A group of these parameters has been designated critical operating parameters, and special limits defined for these parameters are monitored by the main engine controller. Several MPS parameters are monitored by hardware and software. If a violation of any limit is detected, the caution and warning system will illuminate the red *MPS* caution and warning light on panel F7. The light will be illuminated if any of the following conditions are sensed by the hardware C/W system:

- MPS engine liquid oxygen manifold pressure is above 249 psia
- MPS engine liquid hydrogen manifold pressure is above 60 psia
- MPS center, left, or right helium pressure is below 1,150 psia
- MPS center, left, or right helium regulated pressure is below 680 or above 810 psia.

The flight crew can monitor the MPS PRESS HELIUM PNEU, L, C, R meter on panel F7 when the switch below the meter is placed in the *TANK* or *REG* position. Pressure is also shown on the BFS GNC SYS SUMM 1 display. The MPS PRESS ENG MANF LO_2, LH_2 meter can also be monitored on panel F7. A number of conditions will require crew action. For example, an ET ullage pressure low message will require the flight crew to pressurize the external liquid hydrogen tank by setting the *LH_2 ULLAGE PRESS* switch on panel R2 to *OPEN*. A low helium tank pressure may require the flight crew to interconnect the pneumatic helium tank to an engine supply using the *MPS He INTERCONNECT LEFT, CTR,* and *RIGHT* switches on panel R2.

MAIN ENGINE STATUS LEFT, CTR, RIGHT lights on panel F7 are divided into two parts: the top half lights red for an alarm, and the bottom half lights yellow for a warning. The top half is also illuminated for SSME shutdown and redline exceedances.

The yellow bottom half of the *MAIN ENGINE STATUS* light will be illuminated by the following failures:

- Electrical lockup
- Hydraulic lockup
- Loss of two or more command channels or command reject between the GPC and the SSME controller (command path failure)
- Loss of both data channels from one SSME controller (data path failure).

In an electrical lockup for the affected SSME, loss of data from fuel flow rate sensors or the chamber pressure sensors will result in the propellant valve actuators being maintained electronically in the positions existing at the time the last sensor failed. For both sensors to be considered failed, it is only necessary for one sensor to actually fail. In hydraulic lockup, electrical lockup, or command path failure all engine-throttling capability for the affected engine is lost; subsequent throttling commands to that engine will not change the thrust level.

Biased sensors will affect main engine performance. During engine mainstage operation, measurements of the combustion chamber pressure and fuel flow rate are used by the controller to closely control power level and mixture ratio.

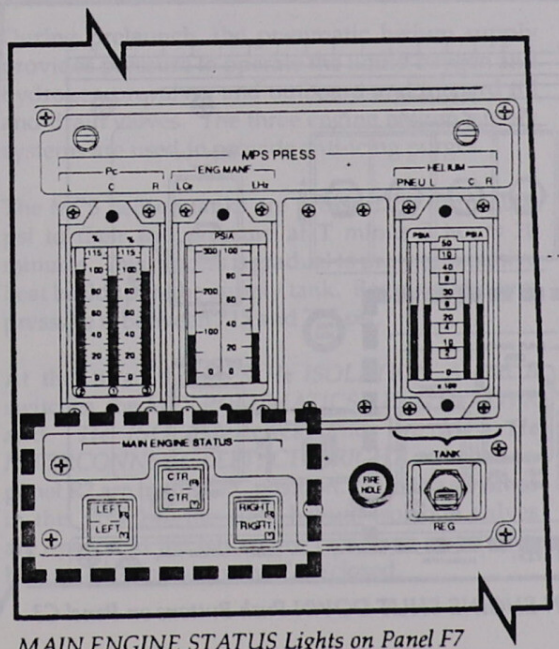

MAIN ENGINE STATUS Lights on Panel F7

There are two chamber pressure transducers on each SSME (an "A" and a "B"). Each consists of two bridges (Wheatstone-type strain gauges) for a total of four controller measurements (an A1, A2 pair and a B1, B2 pair). Each of these measurements is monitored for reasonableness before being used by the controller.

The fuel flow meter is located in the duct between the low and high pressure liquid hydrogen pumps. Two measurements (A and B) come from the flow meter for use by the controller, after each passes reasonableness checks.

Biases of either the flow meter or chamber pressure transducers can cause off-nominal engine operation. Essentially, the crew has no insight into this type of failure and must rely on Mission Control for assistance. The controller will adjust the engine valves to maintain the commanded power level as seen by the chamber pressure transducers, and this is what is displayed to the crew.

The red upper half of the *MAIN ENGINE STATUS LEFT, CTR, RIGHT* lights on panel F7 will be illuminated for an engine in shutdown or post-shutdown phase or for the following redline exceedances with limits inhibited:

- The corresponding engine's high-pressure oxidizer turbine's discharge temperature is above 1,760° R
- The main combustion chamber's pressure is below 400 psia
- The high-pressure oxidizer turbopump's intermediate seal purge pressure is below 170 psia
- The high-pressure oxidizer turbopump's secondary seal purge pressure is below 5 or above 100 psia
- High-pressure fuel turbopump discharge temperature CHA > 1,850° R, CHB > 1,960° R
- High-pressure fuel turbopump liner pressure greater than controller-calculated limit.

Because of the rapidity with which it is possible to exceed these limits, the engine controller has been programmed to sense the limits and automatically shut down the engine if the limits are exceeded. Although a shutdown as a result of violating operating limits is normally automatic, the flight

crew can, if necessary, inhibit an automatic shutdown by using the *MAIN ENGINE LIMIT SHUT DN* switch on panel C3. The switch has three positions: *ENABLE*, *AUTO*, and *INHIBIT*. The *ENABLE* position allows any engine that violates operating limits to be shut down automatically. The *AUTO* position allows only the first engine that violates operating limits to be shut down automatically. If either of the two remaining engines subsequently violates operating limits, it would be inhibited from automatically shutting down. Should a remaining engine violate operating limits, it will not be shut down automatically unless the switch is manually taken to *ENABLE* and then to *AUTO*. The *INHIBIT* position inhibits all automatic shutdowns. The *MAIN ENGINE SHUT DOWN LEFT, CTR, RIGHT* push buttons on panel C3 have spring-loaded covers (guards). When the guard is raised, and the push button is depressed, the corresponding engine shuts down immediately, provided the engine command is operational.

WARNING

Failure of an engine with limit shutdown inhibited will probably result in engine and controller damage, which will prevent detection of the engine failure by the GPCs.

The backup caution and warning processing of the orbiter GPCs can detect certain specified out-of-limit or fault conditions of the MPS. The red *BACKUP C/W ALARM* light on panel F7 is illuminated, a fault message appears on all CRT displays, and an audio alarm sounds if:

- MPS engine liquid oxygen manifold pressure is more than 249 psia
- MPS engine liquid hydrogen manifold pressure is more than 60 psia
- MPS left, center, or right helium pressure is less than 1,150 psia
- MPS regulated left, center, or right helium pressure is less than 679 or more than 806 psia
- Helium system pressure change over time is greater than 20 psi for 3 seconds

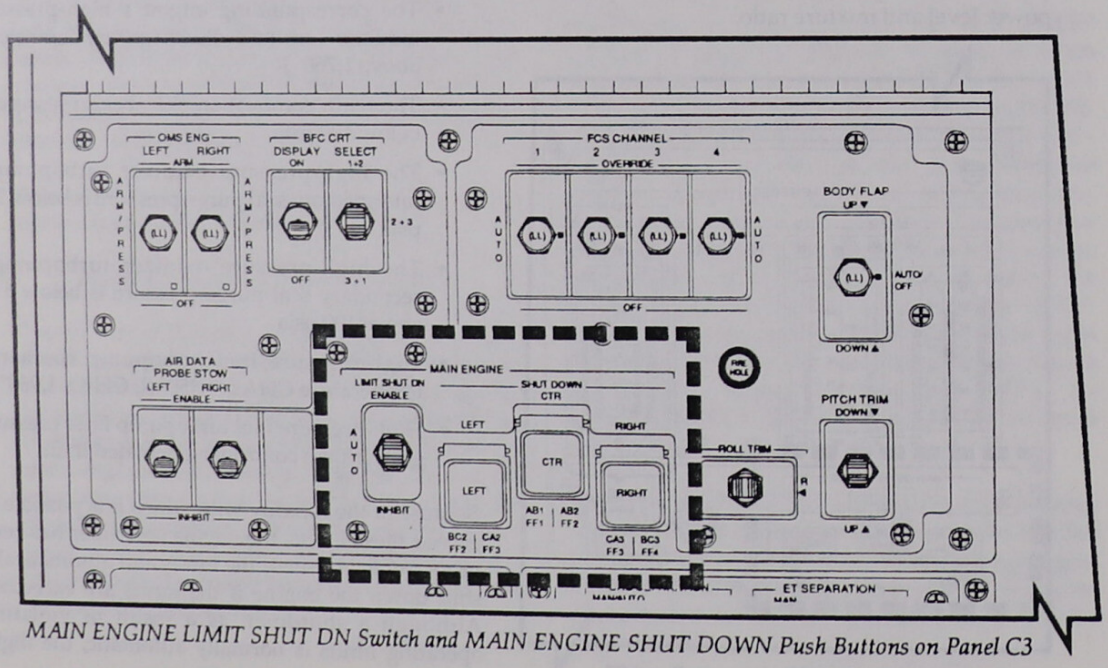

MAIN ENGINE LIMIT SHUT DN Switch and MAIN ENGINE SHUT DOWN Push Buttons on Panel C3

- ET liquid hydrogen ullage pressure is less than 31.6 or greater than 46.0 psia
- ET liquid oxygen ullage pressure is less than 0 or more than 29 psig.

The first four conditions are almost identical to the parameter limits sensed by the primary caution and warning system; therefore, the red *MPS* caution and warning light on panel F7 should also be illuminated.

Operations

Pre-Launch

At T minus 5 hours 50 minutes, the launch processing system initiates the SSME liquid hydrogen chill-down sequence in preparation for liquid hydrogen loading. At T minus 5 hours 15 minutes, the fast-fill portion of the liquid oxygen and liquid hydrogen loading sequence begins, and the liquid hydrogen recirculation pumps are started shortly thereafter. At T minus 3 hours 45 seconds, the fast fill of the liquid hydrogen tank to 98 percent is complete, and a slow topping off process that stabilizes to 100 percent begins. At T minus 3 hours 30 minutes, the liquid oxygen fast fill is complete. At T minus 3 hours 15 minutes, liquid hydrogen replenishment begins, and liquid oxygen replenishment begins at T minus 3 hours 10 minutes.

During prelaunch, the pneumatic helium supply provides pressure to operate the liquid oxygen and hydrogen prevalves and outboard and inboard fill and drain valves. The three engine helium supply systems are used to provide anti-icing purges.

The MPS helium tanks are pressurized from 2,000 psi to their full pressure at T minus 3 hours 20 minutes. This process is gradual to prevent excessive heat buildup in the supply tank. Regulated helium pressure is between 715 and 775 psi.

At this time, the *MPS He ISOLATION A* and *B* switches, the *MPS PNEUMATICS L ENG He XOVR* and *He ISOL* switches, and the *MPS He INTERCONNECT LEFT, CTR, RIGHT* switches on panel R2 are in the *GPC* position. With the switches in this position, the eight helium isolation valves are open, and the left engine crossover and the six helium interconnect valves are closed.

At T minus 16 minutes, one of the first actions by the flight crew (the pilot) is to place the six *MPS He ISOLATION A* and *B* switches and the *MPS PNEUMATICS He ISOL* switch on panel R2 in the *OPEN* position. This procedure will not change the position of the helium isolation valves, which were already open, but it inhibits launch processing system control of valve position.

During prelaunch, liquid oxygen from ground support equipment is loaded through the ground support equipment liquid oxygen T-0 umbilical and passes through the liquid oxygen outboard fill and drain valve, the liquid oxygen inboard fill and drain valve, and the orbiter liquid oxygen feedline manifold. The liquid oxygen exits the orbiter at the liquid oxygen feedline umbilical disconnect and enters the liquid oxygen tank in the external tank.

During loading, the liquid oxygen tank's vent and relief valves are open to prevent pressure buildup in the tank due to liquid oxygen loading. The *MAIN PROPULSION SYSTEM PROPELLANT FILL/ DRAIN LO_2 OUTBD* and *INBD* switches on panel R4 are in the *GND* (ground) position, which allows the launch processing system to control the positions of these valves. Just prior to lift-off, the launch processing system will first command the liquid oxygen inboard fill and drain valve to close. The liquid oxygen in the line between the inboard and outboard fill and drain valves is then allowed to drain back into the ground support equipment, and the launch processing system commands the outboard fill and drain valve to close.

Also during prelaunch, liquid hydrogen supplied through the ground support equipment liquid hydrogen T-0 umbilical passes through the liquid hydrogen outboard fill and drain valve, the liquid hydrogen inboard fill and drain valve, and the liquid hydrogen feedline manifold. The liquid hydrogen then exits the orbiter at the liquid hydrogen feedline umbilical disconnect and enters the liquid hydrogen tank in the external tank. During loading, the liquid hydrogen tank's vent valve is left open to prevent pressure buildup in the tank due to boiloff. The *MAIN PROPULSION SYSTEM PROPELLANT FILL/ DRAIN LH_2 OUTBD* and *INBD* switches on panel R4 are in the *GND* position, which allows the launch processing system to control the position of these valves.

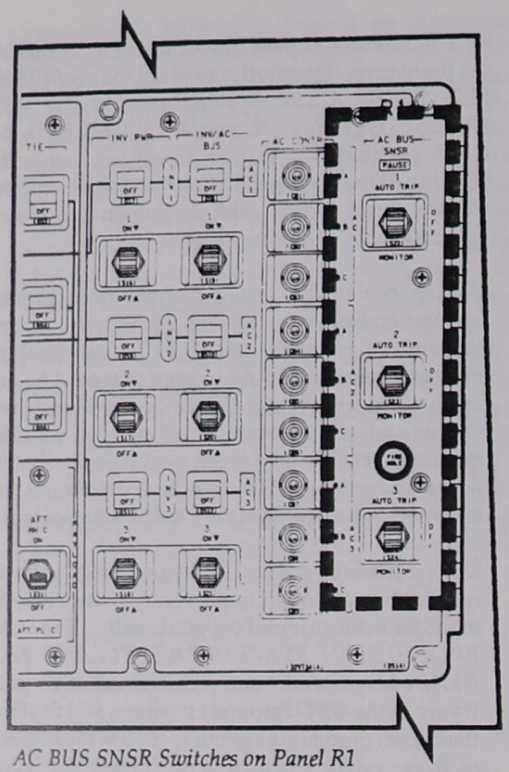

AC BUS SNSR Switches on Panel R1

At T minus 8 minutes, the pilot positions the three *AC BUS SNSR* switches on panel R1 to *MONITOR*. These sensors are not part of the MPS, but the procedure protects the SSMEs. Each engine controller is powered by two of the three ac buses, one for each digital computer unit. Therefore, the loss of one bus will result in a loss of controller redundancy on two engines, and the loss of any two buses will cause the associated engine to shut down. With the switches positioned to *MONITOR*, the sensors will provide caution and warning for an over/undervoltage or overload condition, but they will not trip a bus off line.

Engine Start

At T minus 4 minutes, the fuel system purge begins. It is followed at T minus 3 minutes 25 seconds by the beginning of the engine gimbal tests, during which each gimbal actuator is operated through a canned profile of extensions and retractions. If all actuators function satisfactorily, the engines are gimbaled to a predefined position at T minus 2 minutes 15 seconds. The engines remain in this position until engine ignition.

At T minus 2 minutes 55 seconds, the launch processing system closes the liquid oxygen tank vent valve, and the tank is pressurized to 21 psig with ground support equipment-supplied helium. The liquid oxygen tank's pressure can be monitored on the BFS GNC SYS SUMM 1 CRT (MANF P LO2). The 21-psig pressure corresponds to a liquid oxygen engine manifold pressure of 105 psia.

At T minus 1 minute 57 seconds, the launch processing system closes the liquid hydrogen tank's vent valve, and the tank is pressurized to 42 psig with ground support equipment-supplied helium. The pressure is monitored on the BFS GNC SYS SUMM 1 CRT display (MANF P LH2).

At T minus 31 seconds, the onboard redundant set launch sequence is enabled by the launch processing system. From this point on, all sequencing is performed by the orbiter GPCs in the redundant set, based on the onboard clock time. The GPCs still respond, however, to hold, resume count, and recycle commands from the launch processing system.

At T minus 16 seconds, the GPCs begin to issue arming commands for the solid rocket booster ignition pyro initiator controllers, the hold-down release pyro initiator controllers, and the T-0 umbilical release pyro initiator controllers.

At T minus 9.5 seconds, the engine chill-down sequence is complete, and the GPCs command the liquid hydrogen prevalves to open (the liquid oxygen prevalves are open during loading to permit engine chill-down). The *MAIN PROPULSION SYSTEM* LO_2 and LH_2 *PREVALVE LEFT, CTR, RIGHT* switches on panel R4 are in the *GPC* position.

At T minus 6.6 seconds, the GPCs issue the engine start command, and the main fuel valve in each engine opens. Between the opening of the main fuel valve and MECO, liquid hydrogen flows out of the external tank/orbiter liquid hydrogen disconnect valves into the liquid hydrogen feedline manifold. From this manifold, liquid hydrogen is distributed to the engines through the three engine

liquid hydrogen feedlines. In each line, liquid hydrogen passes through the prevalve and enters the main engine at the inlet to the low-pressure fuel turbopump.

When the GPCs issue the engine start command, the main oxidizer valve in each engine also opens. Between the opening of the main engine oxidizer valve and MECO, liquid oxygen flows out of the external tank and through the external tank/orbiter liquid oxygen umbilical disconnect valves into the liquid oxygen feedline manifold. From this manifold, liquid oxygen is distributed to the engines through the three engine liquid oxygen feedlines. In each line, liquid oxygen passes through the prevalve and enters the main engine at the inlet to the low-pressure oxidizer turbopump.

If all three SSMEs reach 90 percent of their rated thrust by T minus 3 seconds, then at T minus 0, the GPCs will issue the commands to fire the solid rocket booster ignition pyro initiator controllers, the hold-down release pyro initiator controllers, and the T-0 umbilical release pyro initiator controllers. Lift-off occurs almost immediately because of the extremely rapid thrust buildup of the solid rocket boosters. The 3 seconds to T minus zero allow the vehicle base bending loads to return to minimum by T minus 0.

If one or more of the three main engines do not reach 90 percent of their rated thrust at T minus 3 seconds, all SSMEs are shut down, the solid rocket boosters are not ignited, and a pad abort condition exists.

Ascent

Beginning at T minus 0, the SSME gimbal actuators, which were locked in their special preignition position, are first commanded to their null positions for solid rocket booster start and then are allowed to operate as needed for thrust vector control.

Between lift-off and MECO, as long as the SSMEs perform nominally, all MPS sequencing and control functions are executed automatically by the GPCs. During this period, the flight crew monitors MPS performance, backs up automatic functions, if required, and provides manual inputs in the event of MPS malfunctions.

During ascent, the liquid hydrogen tank's pressure is maintained between 32 and 34 psig by the orifices in the two lines and the action of the flow control valve.

The liquid oxygen tank's pressure is maintained between 20 and 22 psig by fixed orifices in the ET to SSME pressurization lines. A pressure greater than 30 psig will cause the tank to relieve through its vent and relief valve.

The SSME thrust level depends on the flight: it is usually between 100 percent and 104 percent, but the maximum setting of 109 percent may be required for emergency situations. Percent of thrust that would be commanded (T) by the BFS is displayed on the BFS ASCENT TRAJ 1 display, and actual thrust levels are read on the three MPS PRESS P_c meters on panel F7. As dynamic pressure rises, the GPCs throttle the engines to a lower power level to minimize structural loading while the orbiter is passing through the region of maximum aerodynamic pressure. This is called the "thrust bucket" because of the way the thrust plot appears on the graph. Although the bucket duration and thrust level vary, a typical bucket runs from about 30 to 65 seconds, mission elapsed time (MET). The solid rocket booster propellant is also shaped to reduce thrust. At approximately 65 seconds MET, the engines are once again throttled up to the appropriate power level (104 percent) and remain at that setting for a normal mission until 3-g throttling is initiated.

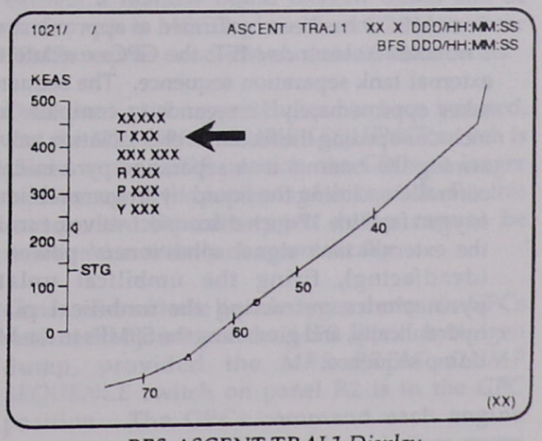

BFS ASCENT TRAJ 1 Display
(percent of thrust commanded by the BFS)

Liquid oxygen manifold pressure is greatly affected by acceleration from the SRBs, but because of its low mass, liquid hydrogen is not. At SRB separation, the liquid oxygen manifold pressure will drop from well over 100 psia to approximately 50 psia. Pressure rises again as the vehicle approaches 3 g's. The crew can monitor the manifold pressures on the BFS GNC SYS SUMM 1 display (MANF P) and on the MPS PRESS ENG MANF meters on panel F7.

Beginning at approximately 7 minutes 40 seconds MET, the engines are throttled back to maintain vehicle acceleration at 3 g's or less. Three g's is an operational limit devised to prevent excessive physical stress on the flight crew and vehicle. Approximately 6 seconds before main engine cutoff, the engines are throttled back to 65 percent in preparation for shutdown.

Main Engine Cutoff (MECO)

Although MECO is based on the attainment of a specified velocity, the engines can also be shut down due to the depletion of liquid oxygen or liquid hydrogen before the specified velocity of MECO is reached. Liquid oxygen depletion is sensed by four sensors in the orbiter liquid oxygen feedline manifold. Liquid hydrogen depletion is sensed by four sensors in the bottom of the liquid hydrogen tank. If any two of the four sensors in either system indicate a dry condition, the GPCs will issue a MECO command to the engine controller (provided they go dry after the arming mass is reached).

Once MECO has been confirmed at approximately 8 minutes 30 seconds MET, the GPCs execute the external tank separation sequence. The sequence takes approximately 18 seconds to complete and includes opening the feedline relief isolation valves, arming the external tank separation pyro initiator controllers, closing the liquid hydrogen and liquid oxygen feedline 17-inch disconnect valves, turning the external tank signal conditioners' power off (deadfacing), firing the umbilical unlatch pyrotechnics, retracting the umbilical plates hydraulically, and gimbaling the SSMEs to the MPS dump sequence.

At this point, the computers check for external tank separation inhibits. If the vehicle's pitch, roll, and yaw rates are greater than 0.7 degree per second, or the feedline disconnect valves fail to close, automatic external tank separation is inhibited. If these inhibit conditions are not met, the GPCs issue the commands to the external tank separation pyrotechnics. In crew-initiated external tank separation or return-to-launch-site aborts, the inhibits are overridden.

At orbiter/external tank separation, the gaseous oxygen and gaseous hydrogen feedlines are sealed at the umbilicals by self-sealing quick disconnects.

In the cockpit, the crew observes MECO through the illumination of the three red *MAIN ENGINE STATUS* lights on panel F7. In addition, the Pc meters on panel F7 drop to 0 percent. Four of the *ORBITAL DAP* push button lights on panel C3 illuminate when the MECO CONFIRMED software flag has been set.

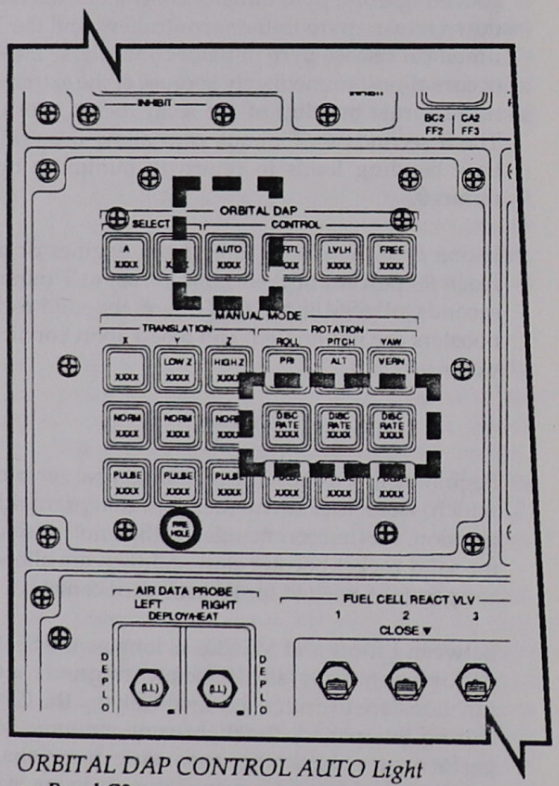

ORBITAL DAP CONTROL AUTO Light on Panel C3

Post-MECO

Ten seconds after main engine cutoff, the RTLS liquid hydrogen dump valves are opened for 80 seconds to ensure that the liquid hydrogen manifold pressure does not result in operation of the liquid hydrogen feedline relief valve.

After MECO confirmed plus 20 seconds, the GPCs interconnect the pneumatic helium and engine helium supply system by opening the three out interconnect valves if the *MPS He INTERCONNECT LEFT, CTR, RIGHT* switches on panel R2 are in the *GPC* position. This connects all 10 helium supply tanks to a common manifold, and it ensures that sufficient helium is available to perform the liquid oxygen and liquid hydrogen propellant dumps.

After external tank separation, approximately 1,700 pounds of propellant are still trapped in the SSMEs, and an additional 3,700 pounds of propellant remain trapped in the orbiter's MPS feedlines. This 5,400 pounds of propellant represents an overall center-of-gravity shift for the orbiter of approximately 7 inches. Non-nominal center-of-gravity locations can create major guidance problems during entry. The residual liquid oxygen, by far the heavier of the two propellants, poses the greatest impact on center-of-gravity travel.

A hazard from the trapped liquid hydrogen occurs during entry, when any liquid or gaseous hydrogen remaining in the propellant lines may combine with atmospheric oxygen to form a potentially explosive mixture. In addition, if the trapped propellants are not dumped overboard, they will sporadically outgas through the orbiter liquid oxygen and liquid hydrogen feedline relief valves, causing slight vehicle accelerations.

For standard insertions, at MECO plus 2 minutes, the first OMS burn begins. Coincident with the start of the OMS-1 burn, the GPCs automatically initiate the liquid oxygen dump, provided the *MPS PRPLT DUMP SEQUENCE* switch on panel R2 is in the *GPC* position. The computers command the two liquid oxygen manifold repressurization valves to open (the *MAIN PROPULSION SYSTEM MANF PRESS* LO_2 switch on panel R4 must be in the *GPC* position), command each engine controller to open its SSME main oxidizer valve, and command the three liquid oxygen prevalves to open (the LO_2 *PREVALVE LEFT, CTR, RIGHT* switches on panel R4 must be in the *GPC* position). The liquid oxygen trapped in the feedline manifolds is expelled under pressure from the helium subsystem through the nozzles of the SSMEs.

If the *MAIN PROPULSION SYSTEM MANF PRESS* LO_2 switch on panel R4 is left in the *GPC* position, the pressurized liquid oxygen dump continues for 90 seconds. At the end of this period, the GPCs automatically terminate the dump by closing the two liquid oxygen manifold repressurization valves, wait 30 seconds, and then command the engine controllers to close their SSME main oxidizer valve. The three liquid oxygen prevalves remain open.

If the mission calls for a direct insertion (i.e., no OMS-1 burn), the crew can perform the liquid oxygen dump manually utilizing the *START* and *STOP* positions of the *MPS PRPLT DUMP SEQUENCE* switch on panel R2. When the liquid oxygen dump is initiated manually, all valve opening and closing sequences are still automatic. Positioning the *MPS PRPLT DUMP SEQUENCE* switch to *START* causes the GPCs to immediately begin commanding all of the required valves to open in the proper sequence. The liquid oxygen dump will continue as long as the switch is in the *START* position, but the pressurized portion with the two liquid oxygen manifold repressurization valves open is still limited to 90 seconds. Placing the switch in the *STOP* position causes the GPCs to begin commanding all the required valves to close automatically and in the proper sequence. The earliest a manual liquid oxygen dump can be performed is MECO plus 20 seconds, since the SSMEs require a cool-down of at least 20 seconds.

Once the liquid oxygen dump has been initiated, and the *MPS PRPLT DUMP SEQUENCE* switch is placed in the *STOP* position, the GPCs no longer monitor any of the positions of this switch. For this reason, the liquid oxygen dump cannot be reinitiated, manually or automatically.

Concurrent with the liquid oxygen dump, the GPCs automatically initiate the MPS liquid hydrogen dump, provided the *MPS PRPLT DUMP SEQUENCE* switch on panel R2 is in the *GPC* position. The GPCs command each engine controller to command a 10-second helium purge of its SSME's fuel lines downstream of the main

engine fuel valves, command the liquid hydrogen manifold repressurization valve to open (provided the *MAIN PROPULSION SYSTEM MANF PRESS* LH_2 switch on panel R4 is in the *GPC* position), and command the two liquid hydrogen fill and drain valves (inboard and outboard) to open.

The liquid hydrogen trapped in the orbiter feedline manifold is expelled overboard under pressure from the helium subsystem through the liquid hydrogen fill and drain valves for 6 seconds. Then the inboard fill and drain valve is closed, the three liquid hydrogen prevalves are opened, and liquid hydrogen flows through the engine bleed valves into the orbiter MPS. It flows through the topping valve, between the inboard and outboard fill and drain valves, and overboard through the outboard fill and drain valve for approximately 88 seconds. The GPCs automatically terminate the dump by closing the two liquid hydrogen manifold repressurization valves and 30 seconds later closing the liquid hydrogen topping and outboard fill and drain valves.

If necessary, the flight crew can also perform the liquid hydrogen dump manually utilizing the *START* and *STOP* position of the *MPS PRPLT DUMP SEQUENCE* switch on panel R2. When the liquid hydrogen dump is initiated manually, all valve opening and closing sequences are still automatic. Placing the *MPS PRPLT DUMP SEQUENCE* switch in the *START* position causes the GPCs immediately to begin commanding all the required valves to open automatically and in the proper sequence. The liquid hydrogen dump continues as long as the switch is in the *START* position, but the pressurized portion of the dump with the two liquid hydrogen manifold repressurization valves open is still limited to 88 seconds. Placing the switch in the *STOP* position causes the GPCs to begin commanding all of the required valves to close automatically and in the proper sequence.

At the end of the liquid oxygen and liquid hydrogen dumps, the GPCs close the helium out interconnect valves and all of the supply tank isolation valves. To do this, the following switches on panel R2 must be positioned to *GPC*: the *MPS He ISOLATION A* and *B LEFT CTR, RIGHT; PNEUMATICS He ISOL;* and *He INTERCONNECT LEFT, CTR, RIGHT*. After the dumps are complete, the SSMEs are gimbaled to their entry positions with the engine nozzles moved inward (toward one another) to reduce aerodynamic heating.

After the OMS-1 burn, the pilot positions all six *MPS ENGINE POWER* switches on panel R2 to *OFF*, which removes all power to the main engine controllers. Once power is removed from the controllers, the main oxidizer valves, which are necessary for the liquid oxygen portion of the dump, can no longer be operated.

The pilot also positions the six *He ISOLATION* switches to *GPC* at this time. When this is done, the helium isolation valves automatically close.

NOTE

After the helium isolation valves are closed, multiple *MASTER ALARMS* are illuminated as the helium pressure in the regulators bleeds down.

Vacuum Inerting

Approximately 19 minutes into the mission and after the MPS liquid oxygen and liquid hydrogen dumps, the flight crew initiates the procedure for vacuum inerting the orbiter's liquid oxygen and liquid hydrogen lines. Vacuum inerting allows any traces of liquid oxygen or liquid hydrogen trapped in the propellant lines after the propellant dumps to be vented into space.

NOTE

Wait 5 minutes between dump stop and vacuum inerting to allow propellants to completely evaporate.

The liquid oxygen vacuum inerting is accomplished by opening the liquid oxygen inboard and the outboard fill and drain valves. They are opened by placing the *MAIN PROPULSION SYSTEM PROPELLANT FILL/DRAIN* LO_2 *OUTBD, INBD* switches on panel R4 to the *OPEN* position.

For liquid hydrogen vacuum inerting, the liquid hydrogen inboard and outboard fill and drain valves are opened by placing the *MAIN PROPULSION SYSTEM PROPELLANT FILL/DRAIN* LH_2 *OUTBD, INBD* switches on panel R4 to *OPEN*. The external

tank gaseous hydrogen pressurization manifold also is vacuum inerted by opening the hydrogen pressurization line vent valve by placing the *MAIN PROPULSION SYSTEM H_2 PRESS LINE VENT* switch on panel R4 to *OPEN*.

The liquid oxygen and liquid hydrogen lines are inerted simultaneously. Approximately 30 minutes is allowed for vacuum inerting. At the end of the 30 minutes, the flight crew closes the liquid oxygen outboard fill and drain valve by placing the *MAIN PROPULSION SYSTEM PROPELLANT FILL/ DRAIN LO_2 OUTBD* switch on panel R4 to *CLOSE*. The inboard fill and drain valve is left open to prevent a pressure buildup between the inboard and outboard valves.

To conserve electrical power after the completion of the liquid oxygen vacuum inerting sequence, the *MAIN PROPULSION SYSTEM PROPELLANT FILL/ DRAIN LO_2 OUTBD, INBD* switches on panel R4 are placed in the *GND* position. This position removes power from the opening and closing solenoids of the corresponding valves; because they are pneumatically actuated, the valves remain in their last commanded position. At the end of the same 30-minute period, the liquid hydrogen outboard fill and drain valve and the hydrogen pressurization line vent valve are closed by positioning the *MAIN PROPULSION SYSTEM PROPELLANT FILL/DRAIN LH_2 OUTBD* and the *MAIN PROPULSION SYSTEM H_2 PRESS LINE VENT* switches on panel R4 to *CLOSE*. The liquid hydrogen inboard fill and drain valve is left open. The *MAIN PROPULSION SYSTEM PROPELLANT FILL/DRAIN LH_2 INBD, OUTBD* and *H2 PRESS LINE VENT* switches on panel R4 are positioned to *GND* to conserve power. The hydrogen pressurization vent line valve is electrically activated; however, it is normally closed (spring loaded to the closed position), and removing power from the valve solenoid leaves the valve closed.

The electrical power to each engine controller and engine interface unit is turned off by positioning the *MPS ENGINE POWER LEFT, CTR, RIGHT* switches on panel R2 and the *EIU L–C, C–R,* and *R–L* switches on panel O17 to *OFF*. The engine controller heaters are turned on by positioning the *MAIN PROPULSION SYSTEM ENGINE CNTLR HTR, LEFT, CTR, RIGHT* switches on panel R4 to *AUTO*.

Deorbit

After the OMS engines have been fired for deorbit, and the orbiter begins to sense the decrease in relative velocity, the GPCs start another vacuum inerting sequence. The liquid oxygen and liquid hydrogen prevalves that were left open at the end of the liquid oxygen and liquid hydrogen dump sequences remain open during the entire mission. Similarly, the liquid oxygen and liquid hydrogen inboard fill and drain valves that were left open at the end of the manual vacuum inerting sequence remain open during the entire mission.

Entry

As entry begins, the left engine's helium isolation valve A is opened by positioning the *MPS He ISOLATION A LEFT* switch on panel R2 to *OPEN*. The left engine's in interconnect valve is opened, and the center and right engines' out interconnect valves are opened. The MPS liquid hydrogen topping valve, outboard fill and drain valves, and inboard and outboard RTLS drain valves are opened. When the velocity drops below 20,000 feet per second, the liquid oxygen outboard fill and drain valve opens.

This vacuum inerting continues until the orbiter's velocity drops below 4,500 feet per second (between 110,000 and 130,000 feet altitude, depending on the entry trajectory). Then, the MPS liquid oxygen and liquid hydrogen outboard fill and drain valves, the liquid hydrogen inboard and outboard RTLS drain valves, and the liquid oxygen prevalves are closed. The MPS liquid oxygen and liquid hydrogen manifold repressurization valves and the MPS helium blowdown supply valves are opened, and a 650-second timer is started. This provides a positive pressure in the liquid oxygen and liquid hydrogen manifolds and in the aft fuselage and the OMS/ RCS pods and prevents contamination. The 650-second timer runs out approximately 1 minute after touchdown. Entry pressurization prevents atmospheric contamination from being drawn into the manifolds and feedlines during entry. Removing contamination from the manifolds or feedlines can be a long and costly process since it involves disassembly of the affected part. Manifold repressurization is an automatic sequence performed by the GPCs. After the timer expires, the purge of the aft fuselage and the OMS/RCS

pods is terminated when the MPS helium supply blowdown valves are closed. The manifold repressurization continues until the ground crews install the throat plugs in the main engine nozzles.

RTLS Abort Propellant Dump Sequence

If MECO is preceded by an RTLS abort, the subsequent MPS liquid oxygen dump will begin 10 seconds after the external tank separation command is issued, and the liquid hydrogen dump will begin simultaneously, regardless of the position of the *MPS PRPLT DUMP SEQUENCE* switch on panel R2.

During an RTLS abort, liquid oxygen initially is dumped through the SSMEs and 30 seconds later via the liquid oxygen fill and drain valves. This dump is performed without helium pressurization and relies on the self-boiling of the trapped liquid.

In the RTLS liquid oxygen dump, the GPCs terminate the dump whenever the orbiter's velocity drops below 3,800 feet per second. The liquid oxygen system is repressurized when the 3,800-feet-per-second velocity is attained, and repressurization continues as in a nominal entry.

The two RTLS dump valves and the two RTLS manifold repressurization valves are opened, and the liquid hydrogen trapped in the feedline manifold is expelled under pressure from the helium subsystem for 80 seconds through a special opening on the port side of the orbiter between the wing and the OMS/RCS pod. After 80 seconds, the liquid hydrogen fill and drain valves are opened, resulting in vacuum inerting of residual liquid hydrogen through bulk boiling.

The GPCs terminate the liquid hydrogen dump and vacuum inerting automatically when the orbiter reaches the 3,800-feet-per-second velocity. At that time, the inboard and outboard RTLS dump valves, the inboard and outboard fill and drain valves, and the two RTLS manifold repressurization valves are closed. The liquid hydrogen system is repressurized after an RTLS liquid hydrogen dump, and repressurization continues as in a nominal entry.

MPS Caution and Warning Summary

- **Data path failure** is the loss of both the primary and secondary data paths from an engine. Data path failure indications include the illumination of the *SM ALERT* light and a yellow *MAIN ENGINE STATUS* light on panel F7, the engine Pc meter on panel F7 driven to zero, and an MPS DATA L (C, R) message.
- **Command path failure** is the loss or rejection of GPC commands to the main engine controller. The engine will no longer throttle or accept commands. Indications include an *SM ALERT* light on panel F7 and audio tone, yellow *MAIN ENGINE STATUS* light on panel F7, no change in the Pc meter during throttling, and an MPS CMD L (C, R) message.
- **Hydraulic lockup** occurs when any of the five hydraulically actuated engine valves fails to achieve its commanded position; the engine does not throttle. Indications are an *SM ALERT* light and tone, yellow *MAIN ENGINE STATUS* light on panel F7, no change in Pc meter during throttling, and an MPS HYD L (C, R) message on the BFS GNC SYS SUMM 1 CRT.
- **Electrical lockup** occurs when the controller loses all Pc or fuel flow rate data from the engine. Indications are *SM ALERT* light and tone, yellow *MAIN ENGINE STATUS* light on panel F7, no change in Pc meter during throttling, and MPS ELEC L (C, R) message on the CRT.
- **Engine failure** indications are a visual and audible *MASTER ALARM*, a red *MAIN ENGINE STATUS* light, engine Pc meter reading of zero, and an SSME FAIL L (C, R) message on the CRT. A drop in acceleration will also occur, but may not be detectable in MM 102.
- **Liquid hydrogen ullage pressure** below 31.6 psia is indicated by an *SM ALERT* light and tone, one or more down arrows by the LH2 pressure readings on the BFS GNC SYS SUMM 1 display, and an MPS LH2/O2 ULL message on the CRT.
- **High liquid hydrogen or liquid oxygen manifold pressure** indications are: a *MASTER ALARM*, an up arrow by the applicable MANF P reading on the BFS GNC SYS SUMM 1 display, and an MPS LH2/LO2 MANF message on the CRT. The limits are 29 psia for liquid oxygen, and 46 psia for liquid hydrogen.
- **Helium tank leaks** are indicated by an *SM ALERT* light and tone, an up arrow by the applicable dP/dT on the BFS GNC SYS SUMM 1 display, and an MPS He P C (L, R) message on the BFS CRT.
- **ET separation inhibit** is indicated by an *SM ALERT* light and tone and an ET SEP INH message.
- **The *MPS*** light on panel F7 will illuminate (red) if liquid hydrogen manifold pressure exceeds 60 psia on orbit or liquid oxygen manifold pressure exceeds 249 psia on orbit. A *MASTER ALARM* also illuminates, an audio alarm sounds, and the red *BACKUP C/W ALARM* on panel F7 illuminates as well. The light will also illuminate for helium pressure below 1,150 psia or regulated helium pressure below 680 or above 810 psia.
- **The red upper half of the *MAIN ENGINE STATUS*** lights on panel F7 will be illuminated for an engine in shutdown or post-shutdown phase or exceeding redline limits with limits inhibited.

MPS Caution and Warning Summary (continued)

O_2 PRESS	H_2 PRESS	FUEL CELL REAC (R)	FUEL CELL STACK TEMP	FUEL CELL PUMP
CABIN ATM (R)	O_2 HEATER TEMP	MAIN BUS UNDERVOLT (R)	AC VOLTAGE	AC OVERLOAD
FREON LOOP (R)	AV BAY/ CABIN AIR	IMU	FWD RCS (R)	RCS JET
H_2O LOOP	RGA/ACCEL	AIR DATA	LEFT RCS (R)	RIGHT RCS (R)
———	LEFT RHC (R)	RIGHT/AFT RHC (R)	LEFT OMS (R)	RIGHT OMS (R)
PAYLOAD WARNING (R)	GPC	FCS SATURATION (R)	OMS KIT	OMS TVC (R)
PAYLOAD CAUTION	PRIMARY C/W	FCS CHANNEL	MPS (R)	———
BACKUP C/W ALARM (R)	APU TEMP	APU OVERSPEED	APU UNDERSPEED	HYD PRESS

MPS Caution and Warning Lights on Panel F7

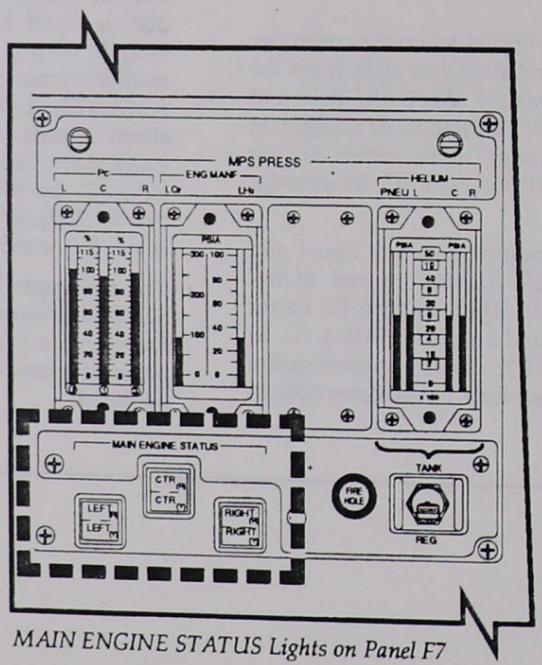

MAIN ENGINE STATUS Lights on Panel F7

MPS Summary Data

- The main engines, assisted by two solid rocket motors during the initial phases of the ascent trajectory, provide the vehicle acceleration from lift-off to MECO at a predetermined velocity.
- Most of the MPS is located at the aft end of the orbiter beneath the vertical stabilizer.
- The MPS consists of three SSMEs and controllers, the external tank, propellant management and helium systems, four ascent thrust vector control units, and six hydraulic servoactuators.
- The SSMEs are reusable, high-performance engines that use liquid hydrogen for fuel and cooling and liquid oxygen as an oxidizer.
- Hydraulically powered gimbal actuators allow each engine to be gimbaled plus or minus 10.5 degrees in the yaw axis and plus or minus 8.5 degrees in the pitch axis for thrust vector control.
- The SSMEs can be throttled 65 to 109 percent in 1 percent increments. Thrust level values are: 100 percent = 375,000 pounds at sea level, 470,000 pounds in a vacuum; 104 percent = 393,800 pounds at sea level, 488,000 pounds in a vacuum; 109 percent = 417,300 pounds at sea level, 513,250 pounds in a vacuum.
- Major SSME components are fuel and oxidizer turbopumps, preburners, a hot gas manifold, main combustion chamber, nozzle, oxidizer heat exchanger, and propellant valves.
- Each SSME has a controller with two redundant digital computer units. Operating in conjunction with engine sensors, valves, actuators, and spark igniters, the controllers form a self-contained system for engine control, checkout, and monitoring.
- The propellant management system consists of manifolds, distribution lines, and valves that transport propellant from the external tank to the three main engines for combustion, and gases from the engines to the external tank for pressurization.
- The helium system consists of 10 supply tanks and associated regulators, check valves, distribution lines, and control valves.
- The helium system is used for: (1) in-flight engine purges, (2) pressure for emergency closing of engine valves, (3) pressure to actuate pneumatically operated propellant valves, and (4) entry purge and repressurization.
- There is one helium system per engine, plus a fourth pneumatic system to operate the propellant valves.
- The three orbiter hydraulic systems supply hydraulic pressure to the MPS to provide thrust vector control and actuate engine valves.
- MPS controls are located primarily on panels R2 and R4, with a few on panels O17, R1, and C3.
- MPS system status indicators appear on panel F7. The BFS GNC SYS SUMM 1 CRT displays several MPS system parameters. The BFS ASCENT TRAJ 1 CRT displays engine throttling level (commanded by BFS, if engaged).

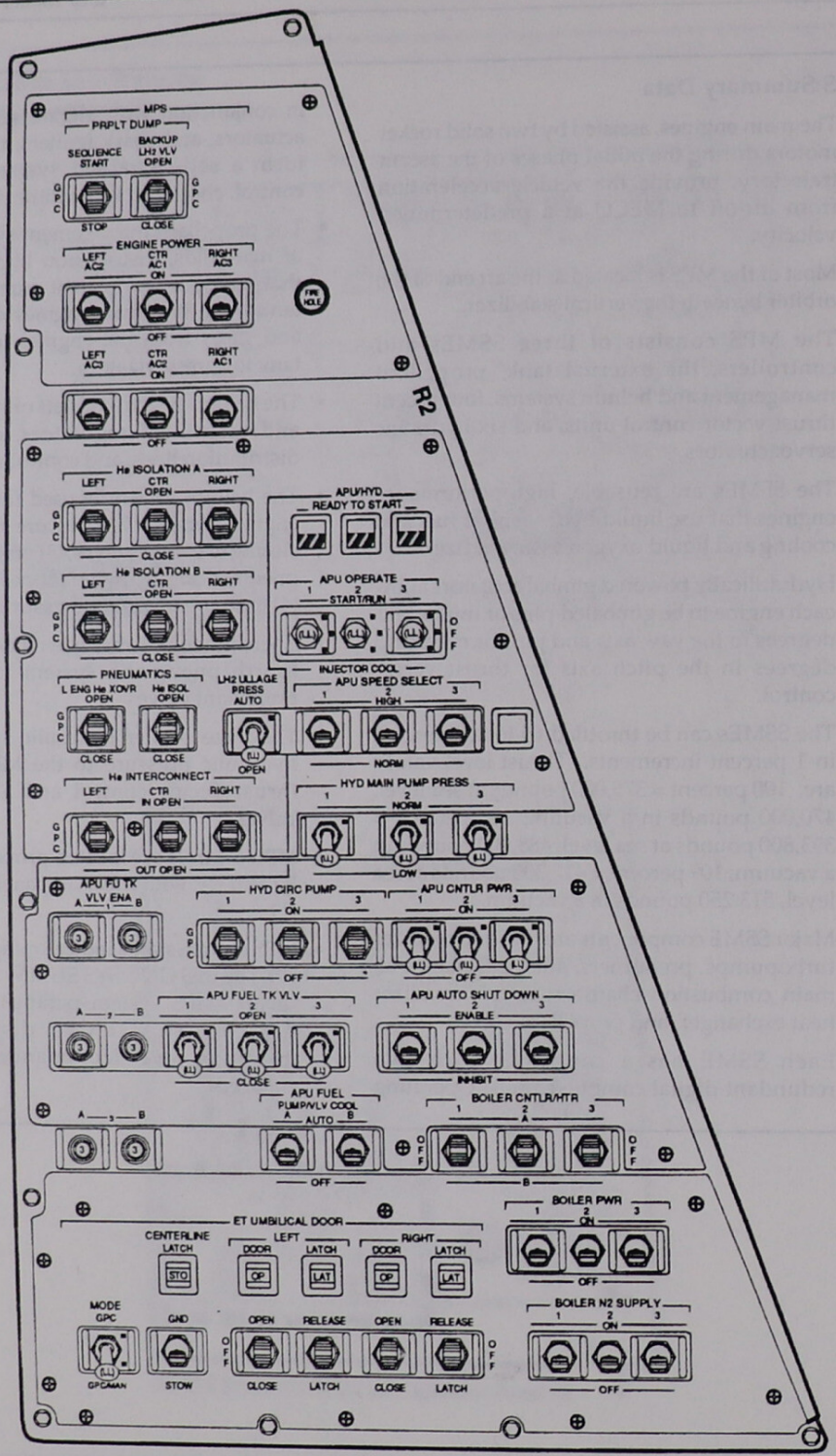
R2
MPS
PRPLT DUMP
SEQUENCE START
BACKUP LH2 VLV OPEN
STOP
CLOSE
ENGINE POWER
LEFT AC2
CTR AC1
RIGHT AC3
ON
OFF
LEFT AC3
CTR AC2
RIGHT AC1
He ISOLATION A
He ISOLATION B
LEFT
CTR
RIGHT
OPEN
CLOSE
APU/HYD
READY TO START
APU OPERATE
START/RUN
INJECTOR COOL
APU SPEED SELECT
HIGH
NORM
LOW
PNEUMATICS
L ENG He XOVR
He ISOL
LH2 ULLAGE PRESS
AUTO
He INTERCONNECT
IN
OUT
HYD MAIN PUMP PRESS
APU FU TK VLV ENA
HYD CIRC PUMP
APU CNTLR PWR
ON
APU FUEL TK VLV
APU AUTO SHUT DOWN
ENABLE
INHIBIT
APU FUEL PUMP/VLV COOL
AUTO
BOILER CNTLR/HTR
ET UMBILICAL DOOR
CENTERLINE LATCH
DOOR
LATCH
MODE GPC
GND
GPC/MAN
STOW
RELEASE
BOILER PWR
BOILER N2 SUPPLY

Panel R2

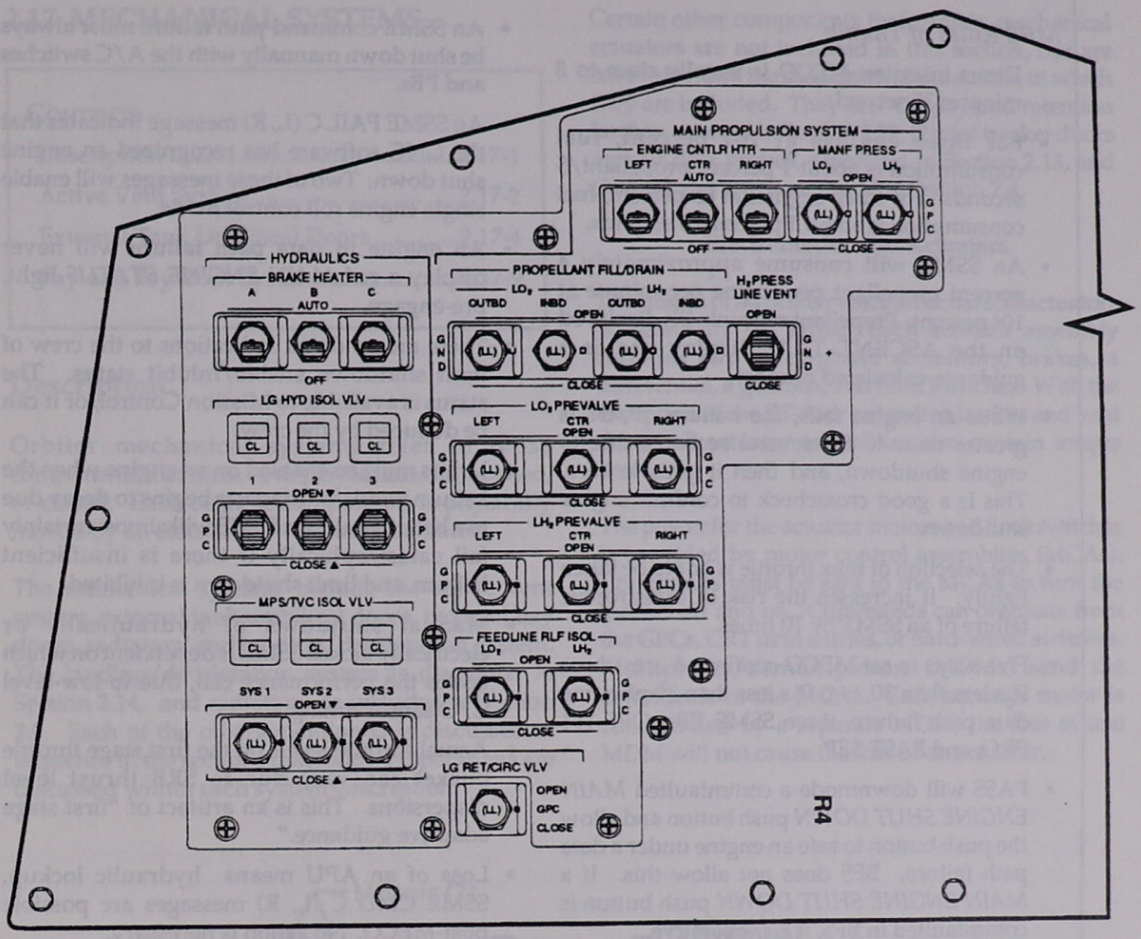

Panel R4

```
XXXX/XXX/018          GNC SYS SUMM 1      XX X DDD/HH:MM:SS
                                          BFS DDD/HH:MM:SS

   SURF      POS     MOM          DPS      1 2 3 4
 L OB     XXX.XS   XXS        MDM FF   S S S S
   IB     XXX.XS   XXS            FA   S S S S
 R IB     XXX.XS   XXS            PL   S S
   OB     XXX.XS   XXS
   AIL    XXX.X
   RUD    XXX.X                FCS CH   1 2 3 4
   SPD BRK XXX.X                        S S S S
   BDY FLP XXX.X
MPS              L       C       R     NAV      1 2 3 4
 HE TK P    XXXXS   XXXXS   XXXXS      IMU      S S S
   REG P A  XXXXS   XXXXS   XXXXS      TAC      S S S
          B  XXXXS   XXXXS   XXXXS      ADTA     S S S S
   dP/dT      XXXS    XXXS    XXXS
 ULL P LH2  XX.XS   XX.XS   XX.XS
        LO2  XX.XS   XX.XS   XX.XS
MPS PNEU HE P        MANF    P
        TK   XXXXS          LH2  XXXS
       REG   XXXXS          LO2  XXXS
      ACUM   XXXXS                          (XX)
```

BFS GNC SYS SUMM 1

MPS Rules of Thumb

- Direct insertion MECO is usually close to 8 minutes 30 seconds.
- For three engines at 104 percent, fuel consumption is about 1 percent propellant/5 seconds. For three engines at 65 percent, fuel consumption is about 1 percent/8 seconds.
- An SSME will consume approximately 4 percent propellant per engine per minute at 104 percent. Propellant remaining is displayed on the ASCENT TRAJ display and is a guidance-calculated number.
- When an engine fails, the helium dP/dT is greater than 40 for several seconds, due to engine shutdown, and then it goes to zero. This is a good crosscheck to confirm engine shutdown.
- The selection of max throttle is not to be taken lightly. It increases the risk of catastrophic failure of an SSME by 10 times.
- Five ways to set MECO confirmed are: three P_Cs less than 30, two P_Cs less than 30 plus one data path failure, three SSME PBs, OPS 104 PRO, and FAST SEP.
- PASS will downmode a commfaulted *MAIN ENGINE SHUT DOWN* push button and allow the push button to safe an engine under a data path failure. BFS does not allow this. If a *MAIN ENGINE SHUT DOWN* push button is commfaulted in BFS, it is inoperative.
- An OPS 602 PRO does not set MECO confirmed.
- BFS requires all three *MAIN ENGINE SHUT DOWN* push buttons SIMO to set MECO confirmed; PASS only requires to see the PBs once.
- To shut an engine down, both contacts on the *MAIN ENGINE SHUT DOWN* push button must be good. If one contact is commfaulted, the button can be used to set the safing flag on an engine that failed under a data path failure. If a contact is power-failed, the button is inoperative unless it is commfaulted.
- An SSME command path failure must always be shut down manually with the A/C switches and PBs.
- An SSME FAIL C (L, R) message indicates that the GNC software has recognized an engine shut down. Two of these messages will enable single engine roll control mode.
- An engine in data path failure will never display a red *MAIN ENGINE STATUS* light, pre-engage.
- There are no direct indications to the crew of limit shutdown enable/inhibit status. The status is available to Mission Control, or it can be deduced by the crew.
- Limits must be enabled on an engine when the helium regulator pressure begins to decay due to a helium leak. An SSME will almost certainly fail catastrophically if there is insufficient helium, and limit shutdown is inhibited.
- Manual shutdown of hydraulically or electrically locked SSME is dependent on which issues the performance call, due to low-level C/O sensor timing.
- Actual throttle levels on the first stage throttle bucket can vary due to SRB thrust level dispersions. This is an artifact of "first stage adaptive guidance."
- Loss of an APU means hydraulic lockup. SSME CMD C (L, R) messages are possible post-MECO. No action is necessary.
- 23 k, 22.5 k, and 24.5 k V_I are about 30 seconds before MECO on the three-engine uphill, TAL, and two-engine uphill cases respectively. Note that V_I indication is lost to the crew post-engage.
- *MPS ENGINE POWER* switches look very similar to *He ISOLATION* switches and are located close together on panel R2. ***Use caution.***
- Shutdown with A/C switches will always cause a data path failure.
- Loss of ALC 1, 2, 3 (APC 4, 5, 6) will cause SSME helium isolation A to close on the C, L, R SSME with no direct indication to the pilot. Do not attempt subsequent helium leak isolations.

2.17 MECHANICAL SYSTEMS

CONTENTS

Description 2.17-1
Active Vent System 2.17-2
External Tank Umbilical Doors 2.17-4
Payload Bay Door System 2.17-9

Description

Orbiter mechanical systems refer to those components that must be deployed, stowed, opened, or closed. Each of these components is physically moved by an electrical or hydraulic actuator.

The mechanical systems include the active vent system, external tank umbilical doors, payload bay doors, radiators, and landing/deceleration system. The landing/deceleration system is discussed in Section 2.14, and radiators are included in Section 2.9. Each of the others mentioned is discussed in sequence in the sections that follow. Operations are discussed within each system description.

Certain other components that contain mechanical actuators are not included in this section, but are covered within the discussion of the system in which they are included. They are: (1) payload retention latches, covered in Section 2.19, (2) star tracker doors and air data probes, discussed in Section 2.13, and (3) Ku-band antenna, found in Section 2.4.

Electromechanical Actuators

The design of all orbiter electromechanical actuators is essentially the same. Each actuator assembly contains two three-phase ac motors, brakes, a differential, a gearbox, and limit switches. With the exception of the ET door centerline latches and vent doors, all actuator assemblies also contain torque limiters.

The power for the actuator motors and limit switches is provided by motor control assemblies (MCAs). Commands must be sent to the MCAs to turn the motors off and on. Commands can originate from the GPCs, CRT item entries, or hard-wired switches. Multiplexer/demultiplexers (MDMs) send the commands to the MCAs. Each actuator motor is commanded by a separate MDM; the loss of one MDM will not cause the loss of an actuator.

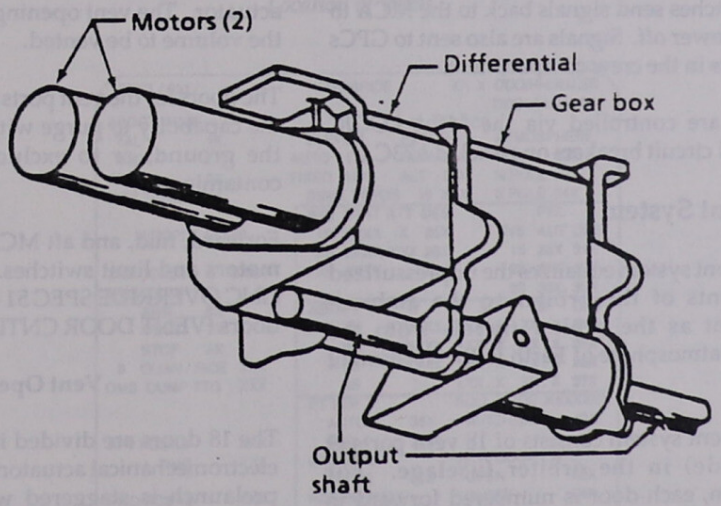

Electromechanical Actuator

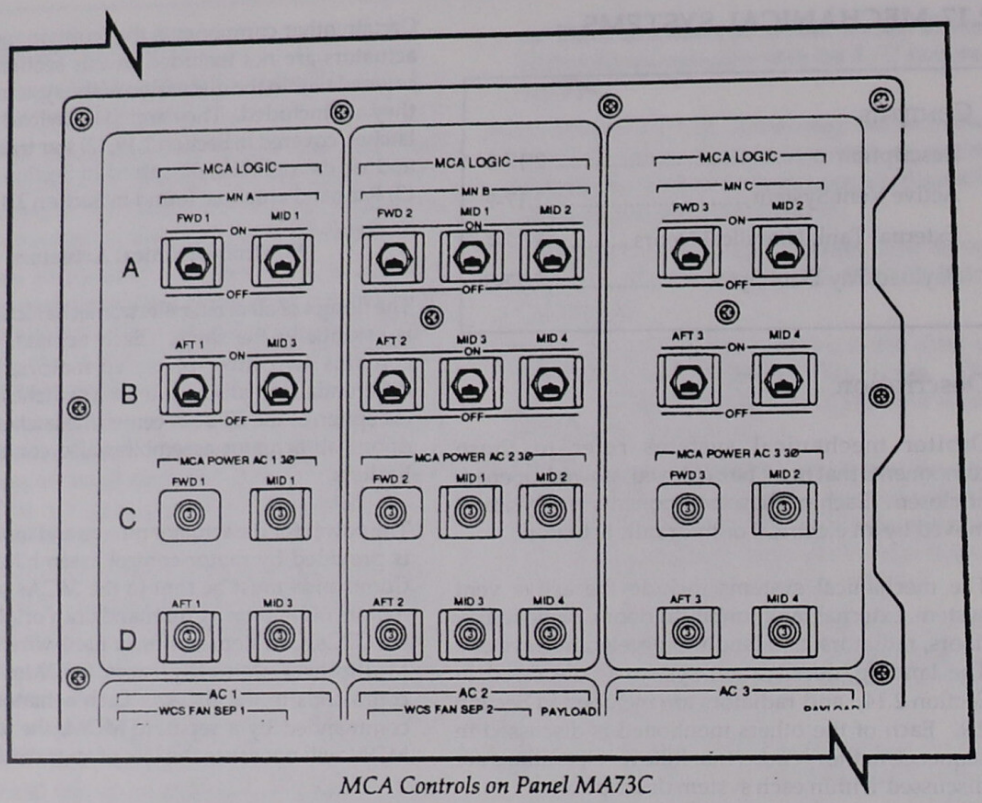

MCA Controls on Panel MA73C

When the actuator reaches the commanded position, the limit switches send signals back to the MCA to turn the ac power off. Signals are also sent to GPCs and talkbacks in the crew compartment.

The MCAs are controlled via the *MCA LOGIC* switches and circuit breakers on panel MA73C.

Active Vent System

The active vent system equalizes the unpressurized compartments of the orbiter to the ambient environment as the orbiter travels from the pressurized atmosphere of Earth to the vacuum of space.

The active vent system consists of 18 vent ports (9 on each side) in the orbiter fuselage. For identification, each door is numbered forward to aft, and each compartment has a dedicated vent on the left- and right-hand side of the orbiter. Each vent door has a pressure seal and a thermal seal, and is driven inward by an electromechanical actuator. The vent openings are sized according to the volume to be vented.

The doors for the vent ports are controlled to provide the capability to purge with dry air or nitrogen on the ground, or to exclude hazardous gases or contaminants.

Forward, mid, and aft MCAs power the vent door motors and limit switches. The crew can also use GNC OVERRIDE SPEC 51 to open or close the vent doors (VENT DOOR CNTL).

Vent Operations

The 18 doors are divided into six groups with two electromechanical actuators per group. Sequencing prelaunch is staggered with a 2.5-second delay between groups, and normal vent opening or closing time is 5 seconds. The vent doors are controlled by

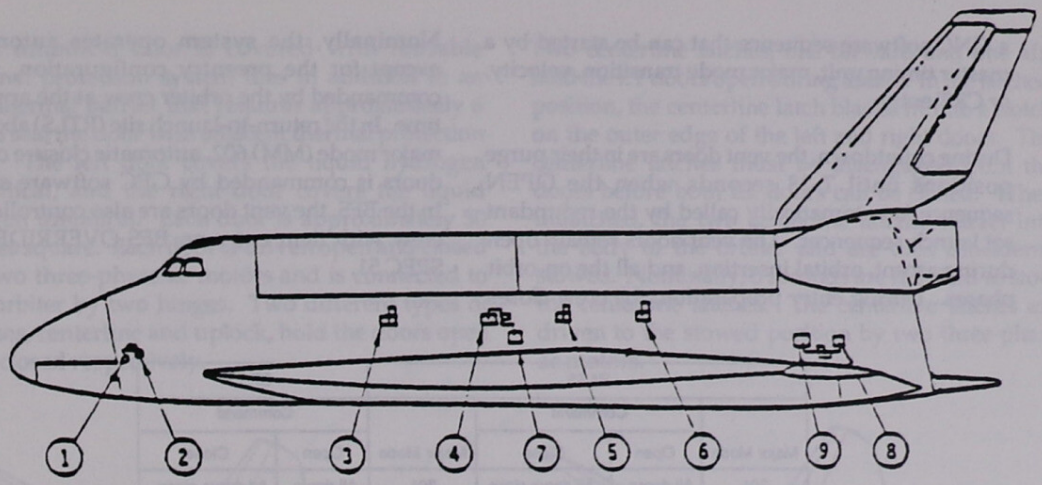

Vent	Area vented	Positions	Type actuator
1, 2	FWD RCS and fuselage	OPEN/CLOSE/PURGE	Common
3, 5	Midbody, payload	OPEN/CLOSE	Single
6	Midbody, payload	OPEN/CLOSE/PURGE	Single
4, 7	Midbody, payload/wing	OPEN/CLOSE	Common
9, 8	Aft fuselage/OMS PODS	OPEN/CLOSE/PURGE	Common

Location of Vents

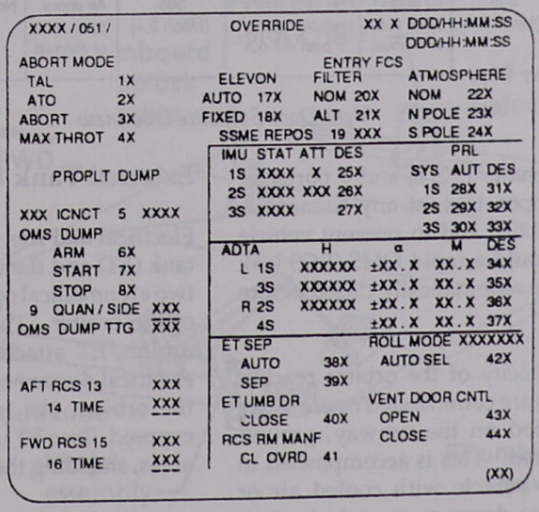

OVERRIDE Display (SPEC 51)

a GNC software sequence that can be started by a master timing unit, major mode transition, velocity, or CRT entry.

During countdown, the vent doors are in their purge positions until T-28 seconds when the OPEN sequence is automatically called by the redundant set launch sequencer. The vent doors remain open during ascent, orbital insertion, and all the on-orbit phases. During entry preparation, the crew closes all vent doors except vents 1, 2, 8, and 9 portside. These vents are left open to vent any hazardous gases during deorbit burn and to prevent vehicle overpressurization should a rapid OMS/RCS leak occur. These vents are automatically closed before entry interface.

When the relative velocity of the orbiter reaches 2400 ft/s, all the doors are commanded open. After the orbiter has stopped on the runway, ground cooling may be required. This is accomplished in part by purging the vehicle with cooled air or nitrogen with the vent doors once again in their purge position.

Nominally, the system operates automatically except for the preentry configuration, which is commanded by the orbiter crew at the appropriate time. In the return-to-launch site (RTLS) abort mode, major mode (MM) 602, automatic closure of all vent doors is commanded by GPC software sequence. In the BFS, the vent doors are also controlled by the crew with item entry on BFS OVERRIDE display SPEC 51.

PASS				BFS	
	Command			Command	
Major Mode	Open	Close	Major Mode	Open	Close
301	All doors open	All doors close then L1 and 2 and 8 and 9 auto reopen	301	All doors open	All doors close, then L1 and 2 and 8 and 9 auto reopen
302	All doors open	CMD all vent doors close	302 (602)	All doors open	If 1st CLS CMD, then CLS all vents; if not CMD ignored
303	All doors open	CMD all vent doors close	303 (603)	All doors open	If 1st CLS CMD, then CLS all vents; if not CMD ignored
At 304 transition		CMD all vent doors close	At 304 transition		If no CLS flag set, then CLS all vent doors
304	L1 and 2 and 8 and 9 open	CMD all vent doors close	304	L1 and 2 and 8 and 9 open	None
305 (Mach 2.4)	All doors open auto or manual	All vent doors will close only if post roll-out	305 (Mach 2.4)	All doors open auto or manual	None

Vent Door Software Overview

External Tank Umbilical Doors

Electrical and fuel umbilicals between the external tank (ET) and the orbiter enter the Shuttle through two aft umbilical openings located on the underside of the orbiter. The umbilical cavities contain the orbiter/ET attachment points and the fuel and electrical disconnects. After the ET separates from the orbiter, the two aft umbilical openings are exposed. Two ET umbilical doors cover the exposed areas, shielding them from entry heating.

Each umbilical door is covered with reusable thermal protection system tiles in addition to an aerothermal barrier that requires approximately 6 psi to seal the door with adjacent thermal protection tiles. The left door covers the liquid hydrogen umbilical, and the right door covers the liquid oxygen umbilical. Each door is approximately 50 inches square. Each door is driven open and closed by two three-phase ac motors and is connected to the orbiter by two hinges. Two different types of latches, centerline and uplock, hold the doors open and closed respectively.

Two centerline latches, one forward and one aft, hold the ET doors open during ascent. In the latched position, the centerline latch blades fit into a notch on the outer edge of the left and right doors. The centerline latches must be disengaged from the doors before both ET doors can be closed. When unlatched, the two centerline latches retract into the body of the orbiter and are then considered stowed. Nominally, 6 seconds are required to stow the centerline latches. The centerline latches are driven to the stowed position by two three-phase ac motors.

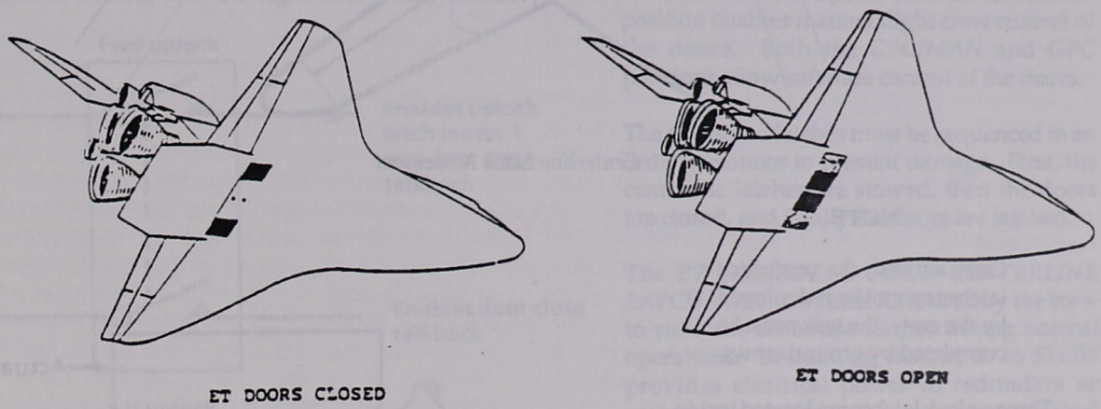

ET Door Positions

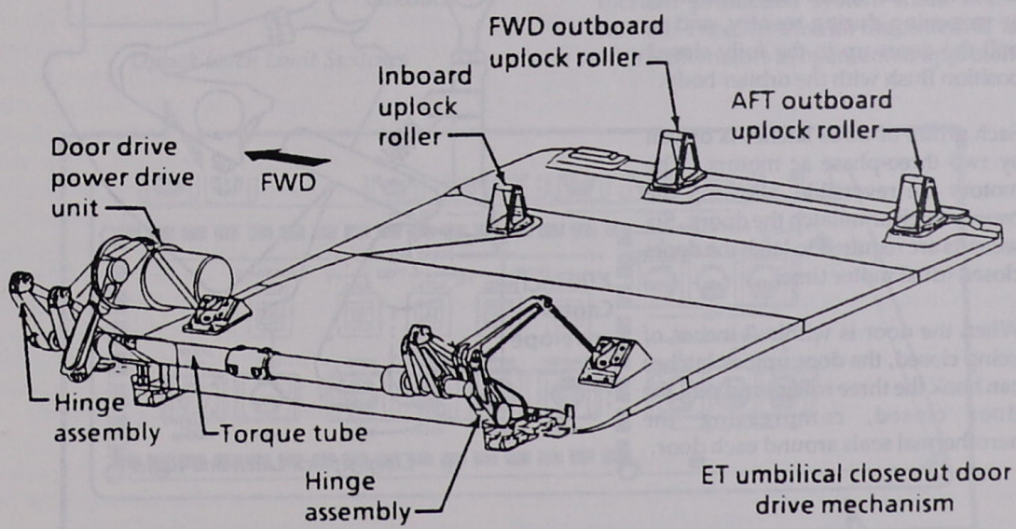

Right Side ET Umbilical Door

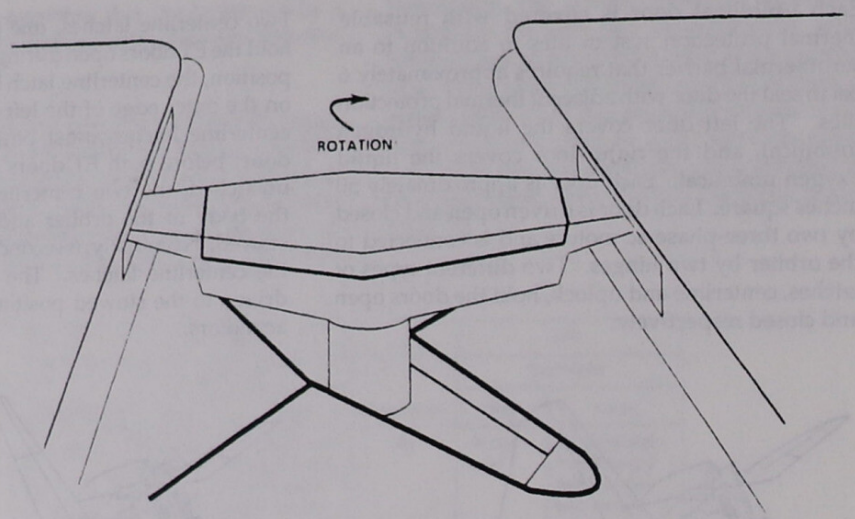

Centerline Latch Movement

NOTE

Once stowed, the centerline latches cannot be redeployed by the crew; the task must be completed by ground crews.

Three uplock latches are located inside each umbilical cavity; the latches engage three uplock rollers located on each door. The latches are designed to prevent the doors from vibrating or reopening during reentry, and to pull the doors up to the fully closed position flush with the orbiter body.

Each group of three latches is driven by two three-phase ac motors. The motors are reversible, allowing the crew to latch or unlatch the doors. Six seconds are required to latch the doors closed (dual motor time).

When the door is within 2 inches of being closed, the door uplock latches can hook the three rollers and pull the door closed, compressing the aerothermal seals around each door.

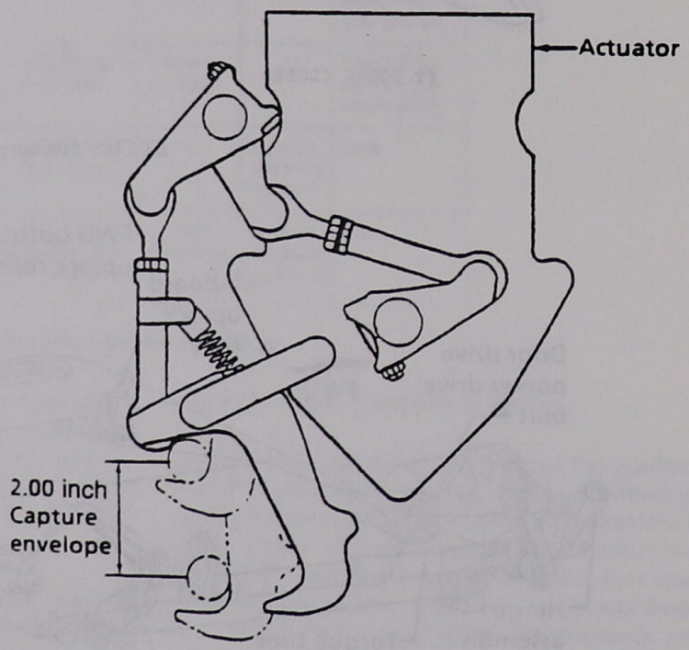

Door Uplock Latch and Roller

> **CAUTION**
>
> Thermal damage will occur if the ET doors are not fully latched flush with the orbiter body.

The status of the uplock latches is provided by limit switches.

The door ready-to-latch limit switches enable the door uplock latch drive mechanisms. The left door ready-to-latch limit switches enable the left door uplock latches, and the right door ready-to-latch limit switches enable the right door uplock latches. Two out of three ready-to-latch indications are required to enable the door uplock latches.

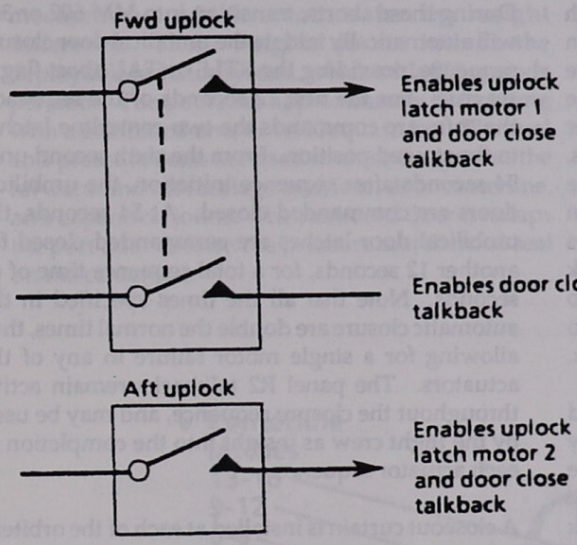

Uplock Latch Limit Switches

ET Door Operations

The ET doors are closed post OMS-1 burn after MPS vacuum inerting. The doors are controlled by the crew by switches on panel R2. The doors are also automatically controlled by the PASS or (BFS) software during TAL and RTLS aborts, certain contingencies, or if selected by the crew on the GNC SPEC 51 OVERRIDE display. The *ET UMBILICAL DOOR MODE* switch on panel R2 in the *GPC/MAN* position enables manual flight crew control of the doors. Both the *GPC/MAN* and *GPC* positions allow software control of the doors.

The doors and latches must be sequenced in an orderly manner to prevent damage. First, the centerline latches are stowed, then the doors are closed, and finally the doors are latched.

The *ET UMBILICAL DOOR CENTERLINE LATCH* switch on panel R2 is used by the crew to stow the centerline latches during normal operations. Positioning the switch to *STOW* provides electrical power to redundant ac motors that operate an electromechanical actuator for each centerline latch. This will cause the latches to rotate and retract such that the latch blades will be flush with the orbiter thermal protection system mold line when stowed. The stow time for the centerline latches with both motors in operation is approximately

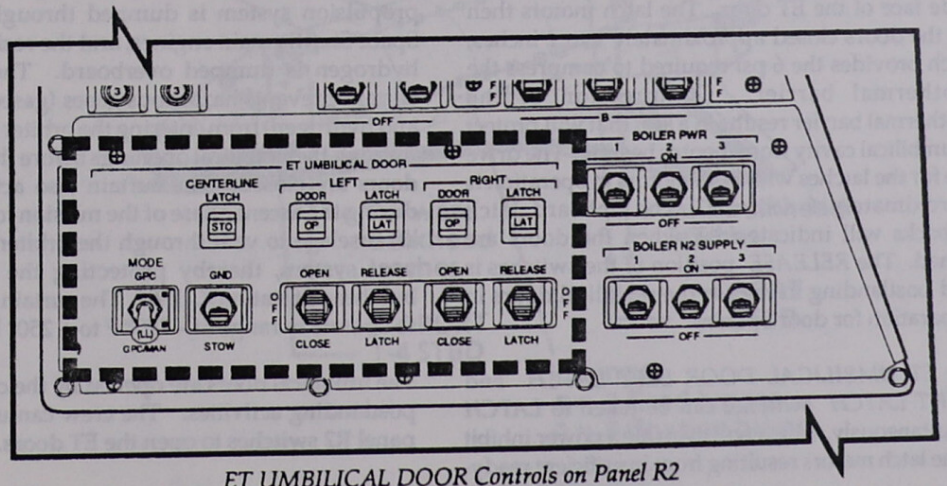

ET UMBILICAL DOOR Controls on Panel R2

6 seconds. The talkback above the switch will indicate barberpole when the latches are deployed, and *STO* when the latches are stowed. The microswitches that drive the talkback are located within the centerline latch drive mechanism and are activated based on the position of the latch. The *ET UMBILICAL DOOR CENTERLINE LATCH* switch is then taken back to the *GND* position, which removes power from the centerline latch motors.

The *ET UMBILICAL DOOR LEFT DOOR* and *RIGHT DOOR* switches on panel R2 are used by the crew to close the ET doors. Positioning the switches to *CLOSE* provides electrical power to redundant ac reversible motors, which drive the doors through a system of bellcranks and pushrods. With both motors in operation, the doors will close in approximately 24 seconds. As the doors move within 2 inches of being closed, two operations take place. First, microswitches within the door power drive unit inhibit power from the door drive motors. Second, two rollers mounted on the outboard edge of each door contact two ready to latch paddles in the umbilical cavity. The two ready to latch paddles drive three microswitches that enable the uplock latch motors and the onboard close talkback. Two of the three microswitch indications are needed to provide a *CL* indication on the door drive talkback.

The *ET UMBILICAL DOOR LEFT LATCH* and *RIGHT LATCH* switches on panel R2 are used by the crew to latch the ET doors. Positioning the switches to *LATCH* provides electrical power to redundant ac motors that drive the three uplock latches through a system of pushrods. The uplock latches engage three rollers that are located on the inside face of the ET door. The latch motors then pull the doors closed approximately 1 to 2 inches, which provides the 6 psi required to compress the aerothermal barrier. Compression of the aerothermal barrier results in a seal that will protect the umbilical cavity from reentry heating. The drive time for the latches with both motors in operation is approximately 6 seconds. The onboard latch talkbacks will indicate *LAT* when the doors are latched. The *RELEASE* position of the switches is used postlanding to release the umbilical doors in preparation for door opening.

The *ET UMBILICAL DOOR LEFT LATCH* and *RIGHT LATCH* switches can be taken to *LATCH* simultaneously, which will override a power inhibit to the latch motors resulting from insufficient ready-to-latch indications. Mission Control has additional telemetry that will determine if a power inhibit exists because of missing ready-to-latch indications.

The *ET UMBILICAL DOOR MODE* switch on panel R2 positioned to *GPC* or *GPC/MAN* provides a backup method of stowing the centerline latches and closing the umbilical doors through the GNC SPEC 51 OVERRIDE display (PASS or BFS). Selecting item 40 (ET UMB DR CLOSE) in PASS or item 30 in BFS will bypass panel R2 switches and automatically close the ET doors. This software-driven method is automatically performed during RTLS and TAL aborts.

During these aborts, transition into MM 602 or 304 will automatically initiate the umbilical door closure sequence, providing the RTLS or TAL abort flag is set true. For the first 12 seconds of the sequence, the software commands the two centerline latches to the stowed position. From the sixth second until 54 seconds after sequence initiation, the umbilical doors are commanded closed. At 54 seconds, the umbilical door latches are commanded closed for another 12 seconds, for a total sequence time of 66 seconds. Note that all the times specified in the automatic closure are double the normal times, thus allowing for a single motor failure in any of the actuators. The panel R2 talkbacks remain active throughout the closure sequence, and may be used by the flight crew as insight into the completion of each actuator sequence.

A closeout curtain is installed at each of the orbiter/external tank umbilicals. After external tank separation, the residual liquid oxygen in the main propulsion system is dumped through the three Space Shuttle main engines, and the residual liquid hydrogen is dumped overboard. The umbilical curtain prevents hazardous gases (gaseous oxygen and hydrogen) from entering the orbiter aft fuselage through the umbilical openings before the umbilical doors are closed. The curtain also acts as a seal during the ascent phase of the mission to permit the aft fuselage to vent through the orbiter purge and vent system, thereby protecting the orbiter aft bulkhead at station X_o 1307. The curtain is designed to operate in range of – 200° F to + 250° F.

The umbilical doors are opened by the crew during postlanding activities. The crew can use only the panel R2 switches to open the ET doors.

Payload Bay Door System

The payload bay doors provide an opening for payload deployment from and retrieval into the payload bay. The doors provide structural support for the orbiter midbody, and they house the ECLSS radiators that transfer heat from the vehicle to space.

There are two doors, port and starboard. Each door consists of five segments interconnected by expansion joints. The port door with attached systems weighs approximately 2,375 pounds, and the starboard door weighs about 2,535 pounds. The starboard door contains the centerline latch active mechanisms, which accounts for the weight difference. These weights do not include the deployable radiator system, which adds 833 pounds per door. The doors are approximately 60 feet long with a combined area of 1,600 square feet. Thermal and pressure seals are used to close the gaps at the forward and aft fuselage interface, door centerline, and expansion joints. The starboard door overlaps the port door to form the pressure and thermal seal on the centerline.

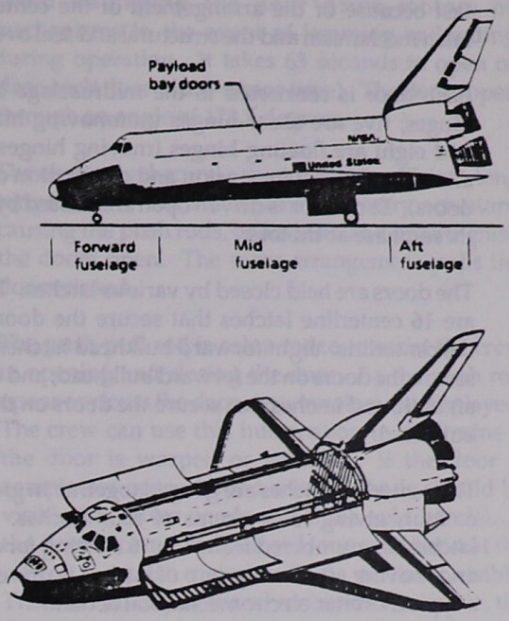

Payload Bay Doors Location

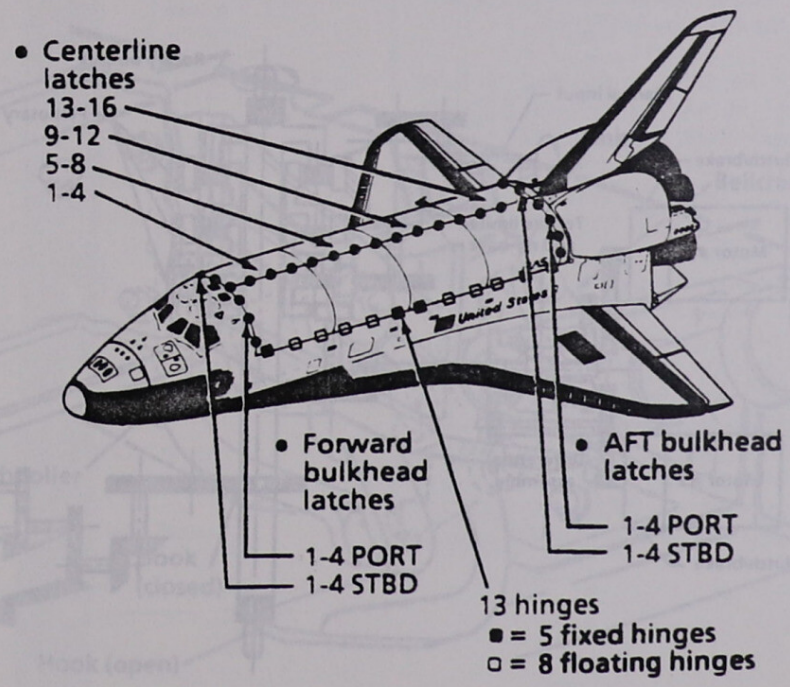

Payload Bay Door Latch Locations

The starboard door must be opened first and closed last because of the arrangement of the centerline latch mechanism and the structural and seal overlap.

Each door is connected to the midfuselage by 13 hinges; five are shear hinges (nonmoving hinges) and eight are floating hinges (moving hinges that allow for thermal expansion and contraction of the doors). Each door is driven open and closed by two three-phase ac motors.

The doors are held closed by various latches. There are 16 centerline latches that secure the doors on the centerline: eight forward bulkhead latches that secure the doors on the forward bulkhead, and eight aft bulkhead latches that secure the doors on the aft bulkhead.

The centerline latches are ganged together in groups of four, giving four groups of four latches. The latches are numbered from 1 to 16 starting forward and moving aft. Each group of latches is driven by a typical orbiter electromechanical actuator.

The motors are reversible, which allows the crew to latch or unlatch the doors.

The starboard door contains the centerline latch hooks, and the port door contains the centerline latch rollers. The hooks are the active portion of the centerline latch system; they rotate to grasp the latch rollers.

As the torque shaft rotates, the bellcrank and link cause the hook to rotate closed (or open), engaging the latch roller on the port door. Twenty seconds are required to open or close a group of centerline latches (dual-motor time).

The status of the centerline latch groups is provided by limit switches. There are two open and two closed limit switches associated with each centerline latch group. These limit-switch indicators relay the position of the latch group (i.e., latch group is open or closed). They also provide a method for enabling and disabling latch drive motors.

The bulkhead latches are ganged together in groups of four, giving a total of two groups of forward bulkhead latches, and two groups of aft bulkhead latches. Each group of latches is driven by a typical electromechanical actuator using two three-phase ac motors. The motors are reversible, which allows the crew to latch or unlatch the doors.

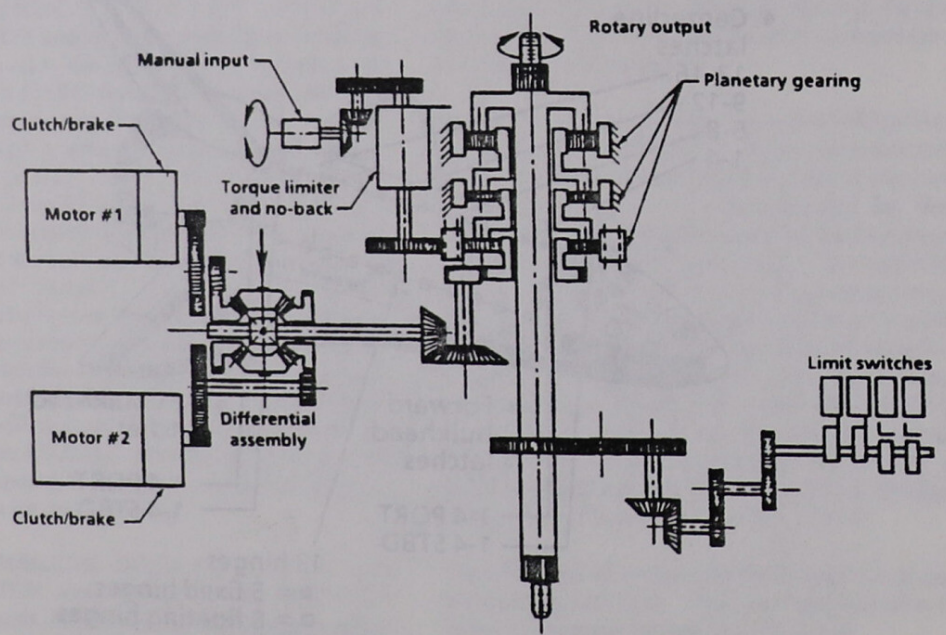

Payload Bay Door Centerline Latch Actuator Schematic

The latch hooks for the bulkhead latches are located on the forward and aft edges of each door, and the latch rollers are located on the forward and aft bulkheads. The hooks are the active portion of the bulkhead latch system; they rotate to grasp the latch roller.

As the torque shaft rotates, the linkage connecting the latches begins to move. This causes a staggered latch open or close sequence; latch 1 closes first, then latch 2, 3, and 4. Thirty seconds are required to open or close a group of bulkhead latches (dual-motor time).

The status of the bulkhead latch groups is provided by limit switches similar to those used by the centerline latches. There are two open and two closed limit switches for each bulkhead latch group. These limit-switch indicators relay the position of the bulkhead latch group (i.e., latch group is open or closed). They also provide a method for enabling or disabling the centerline latch drive motors and the payload bay door drive motors.

The doors are driven open or closed by a rotary actuator consisting of two three-phase ac motors per drive unit. (Each door contains its own.) Torque limiters are incorporated in the rotary actuators to avoid damaging the door drive motors or mechanisms in the event of jamming or binding during operation. It takes 63 seconds to open or close each door (dual-motor time). The doors open through an angle of 175.5 degrees.

The electromechanical actuator drives a 55-foot-long torque shaft. The shaft turns the rotary actuators, causing the push rods, bellcranks, and links to push the doors open. The same arrangement pulls the doors closed.

The push-pull rod is color-coded to assist the crew in opening and closing the door. As the push rod opens or closes the door, certain colors are displayed. The crew can use this information to determine if the door is warped or jammed. If the door is completely opened, nine colored bands should be visible (six silver bands and three gold bands). If the door is completely closed, one gold band at the top of the push rod should be partially visible. Therefore, if any of the silver bands are visible, the door is warped or jammed.

Each band, gold or silver, represents the amount the doors are open or closed in degrees of rotation.

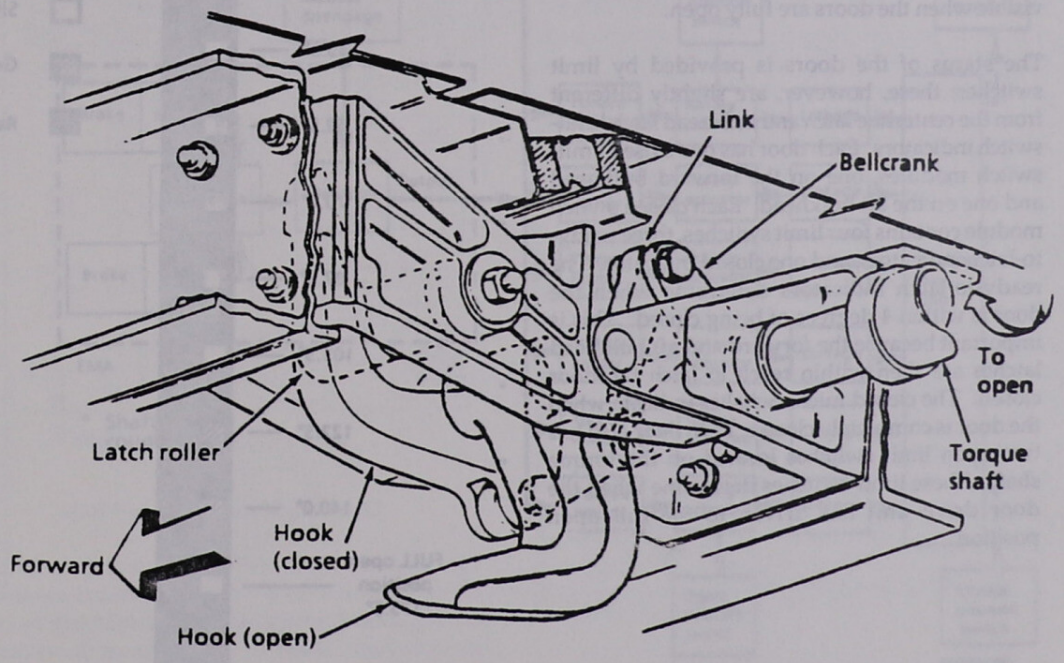

Payload Bay Door Centerline Latch

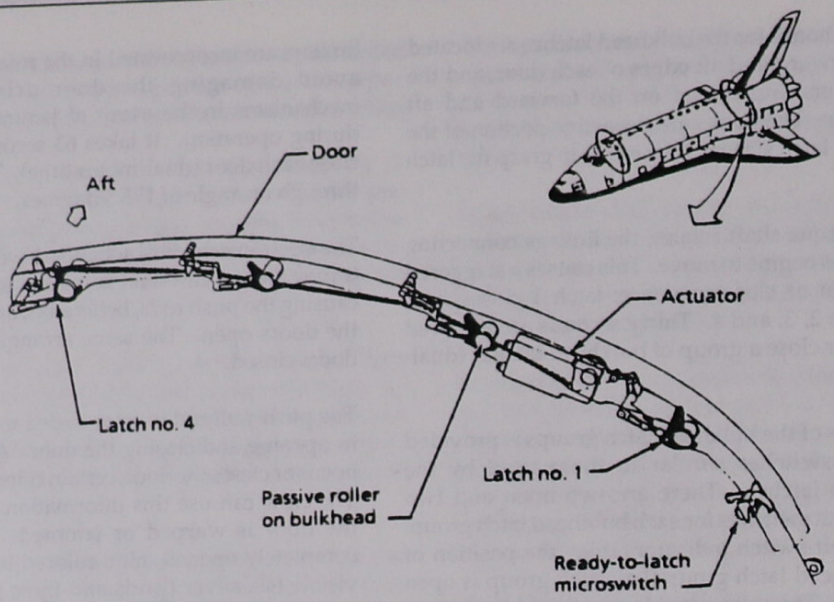

Payload Bay Door Bulkhead Latches

There are six push-pull rods per door. They can be located by looking along the sill longeron that runs along the entire length of the payload bay. There is actually a 10th band (silver) located below the two gold bands. This band is only partially visible when the doors are fully open.

The status of the doors is provided by limit switches; these, however, are slightly different from the centerline latch and bulkhead latch limit-switch indicators. Each door has two closed limit-switch modules, one on the forward bulkhead and one on the aft bulkhead. Each closed switch module contains four limit switches, three ready-to-latch indicators, and one closed indicator. The ready-to-latch indicators determine when the door is within 4 degrees of being closed. This is important because the forward and aft bulkhead latches are then within reach to latch the door closed. The closed microswitches indicate when the door is completely closed. Each door also has two open limit switches located on the torque shaft. These limit switches determine when the door drive unit has driven to the full open position.

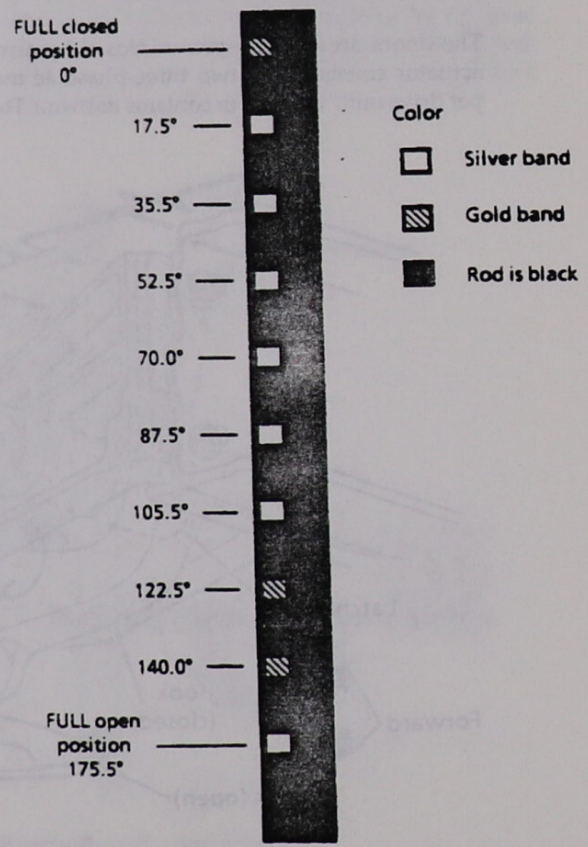

Push-Pull Rod Markings

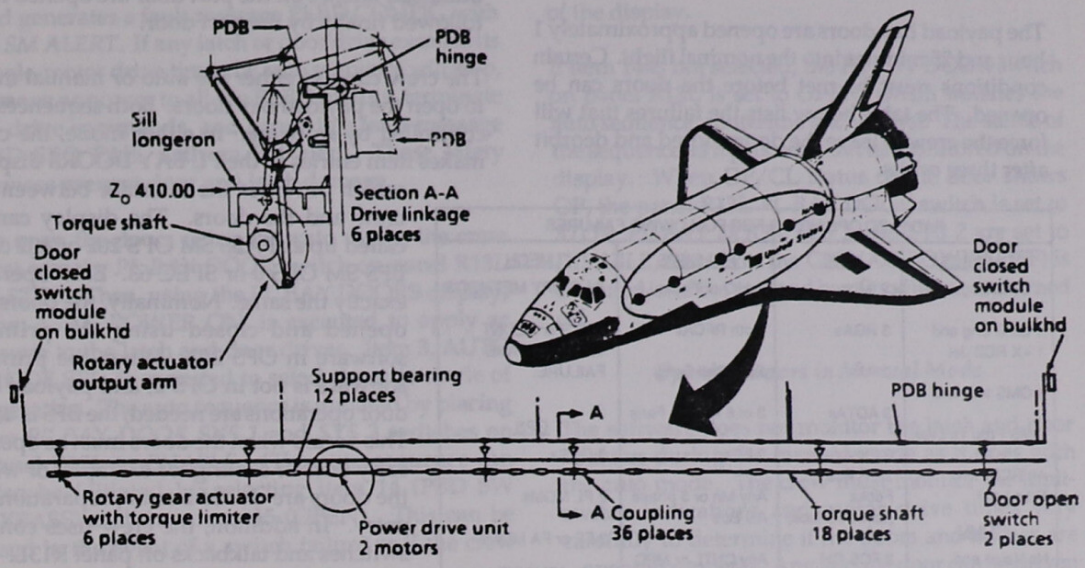

Payload Bay Door Drive System

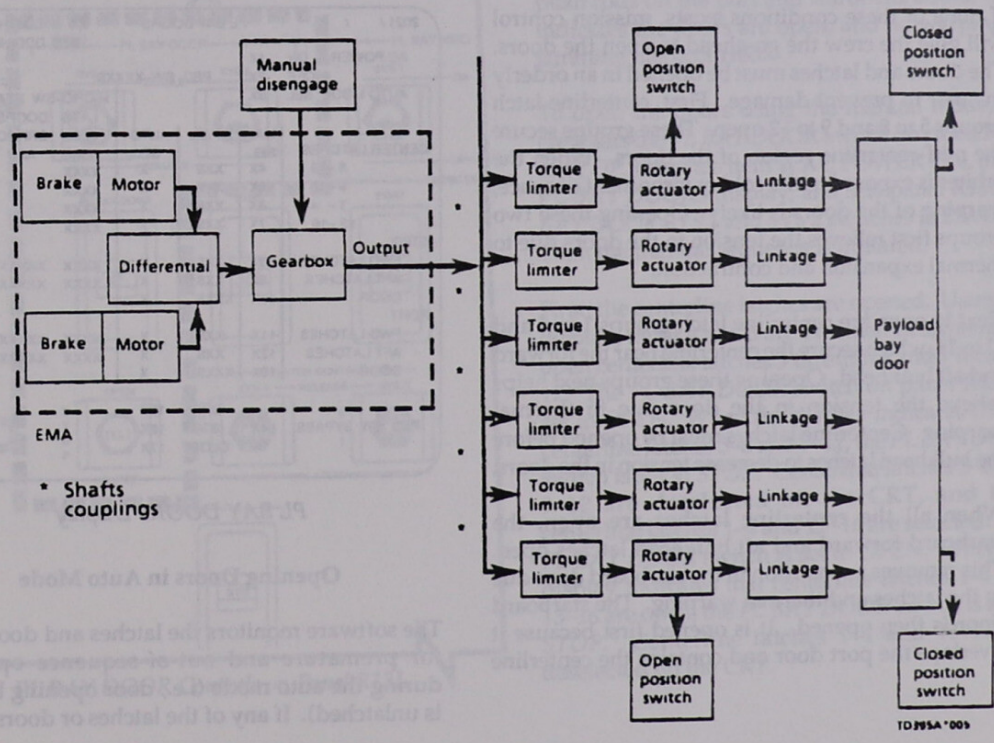

Payload Bay Door Drive System Mechanical Block Diagram

Payload Bay Door Operations: Opening

The payload bay doors are opened approximately 1 hour and 25 minutes into the nominal flight. Certain conditions must be met before the doors can be opened. The table below lists the failures that will force the crew to leave the doors closed and deorbit after three orbits.

RAD/PLBD OPS NO GO FOR FOLLOWING FAILURES			
OMS/RCS	GNC	ECLS/EPS	MECH
1 OMS Engs	2 IMUs	1 H_2O or Freon Lp	2 LG DPY METHODS
1 OMS Eng and 1 +X RCS Jet	3 RGAs	Both RFCAs	PRES or REDNT WINDOW PANE FAILURE
1 OMS Inlet line	3 AAs	Both Cab Fans	
OMS Prop Tk Leak	3 ADTAs	3 of 6 Av Bay Fans	DPS
Aft RCS He or Prop Leak	3 Elevon or 2 BF Pos Fdbks (same surface)	2 FCs	3 GPCs
COMM		Any Mn or 3 phase AC Bus	2 PL MDMs
No Voice and No CMD	2 FCS CH (same surface)	Any CNTL or MPC Bus	2 FF or FA MDMs
		3 IMU Fans	APU/HYD
			2 APU/HYD/WSB

If none of these conditions exists, mission control will give the crew the go-ahead to open the doors. The doors and latches must be opened in an orderly manner to prevent damage. First, centerline latch groups 5 to 8 and 9 to 12 open. These groups secure the mid-centerline region of the doors. When the orbiter is exposed to the cold environment of space, warping of the doors is likely. Opening these two groups first relieves the tension in the doors due to thermal expansion and contraction.

Next to open are centerline latch groups 1 to 4 and 13 to 16, which secure the centerline near the forward and aft bulkhead. Opening these groups next helps relieve the tension in the door due to thermal warping. Centerline latches must be opened before the bulkhead latches to decrease tension in the doors.

When all the centerline latches are open, the starboard forward and aft bulkhead latches open. This removes any tension in the starboard door due to the latches and thermal warping. The starboard door is then opened. It is opened first because it overlaps the port door and contains the centerline latch mechanisms. The port forward and port aft bulkhead latches on the port door are opened next, followed finally by the port door.

The crew can use either the auto or manual mode to open the payload bay doors. Both sequences are controlled by software. In either mode, the crew makes item entries to the PL BAY DOORS display, which provides the interface between the crew and the doors. The display can be called up as PASS SM OPS 202 or 402 or as BFS SM OPS 0 or SPEC 63. Each operates exactly the same. Nominally, the doors are opened and closed using the primary software in OPS 202. When the primary software is not in OPS 2, and payload bay door operations are needed, the BFS is used. This occurs when the doors must be opened early (loss of cooling for example) or when the doors are closed late in preparation for entry. In addition, the crew uses control switches and talkbacks on panel R13L.

2021 / / PL BAY DOORS XX X DDD/HH:MM:SS
BFS DDD/HH:MM:SS

AC POWER ON 1X
OFF 2X
AUTO MODE SEL 3X
PBD SW-XXXXS

	MAN SEL	OP/CL	AUTO SEQ	MICRO-SW STAT LATS CCOO ABAB	DOORS CRRRO ABC
CENTER LATCHES					
5 - 8	4X	XXS	X	XXXX	
9 -12	5X	XXS	X	XXXX	
1 - 4	6X	XXS	X	XXXX	
13 -16	7X	XXS	X	XXXX	
STBD					
FWD LATCHES	8X	XXS	X	XXXX	XXXXX
AFT LATCHES	9X	XXS	X	XXXX	XXXXX
DOOR	10X	XXXS	X		
PORT					
FWD LATCHES	11X	XXS	X	XXXX	XXXXX
AFT LATCHES	12X	XXS	X	XXXX	XXXXX
DOOR	13X	XXXS	X		

PBD SW BYPASS 14X
OPEN 15X
STOP 16X
CLOSE 17X

(XX)

PL BAY DOORS Display

Opening Doors in Auto Mode

The software monitors the latches and door drives for premature and out-of-sequence operation during the auto mode (i.e., door opening before it is unlatched). If any of the latches or doors are out

of configuration, the auto mode stops, removes ac power to all the payload bay door (PLBD) motors, and generates a fault message PLBD CONFIG with an *SM ALERT*. If any latch or door drive exceeds its single-motor drive time, the auto sequence will stop, remove ac power to all the PLBD motors, terminate all drive commands, and generate a fault message PBD SEQ FAIL with an SM alert. These safety devices prevent door and latch damage.

To open the doors using the auto mode, the crew first sets the *PL BAY DOOR* switch on panel R13L to *STOP*. Then, using the PL BAY DOORS display, item 1, AC POWER ON, is executed to apply ac power to the latch and door drives. Item 3, AUTO MODE SEL, is executed to select the auto mode of operation. The auto sequence is initiated by placing the *PL BAY DOOR SYS 1* and *SYS 2* switches on panel R13L to *ENABLE*. (The auto sequence can also be initiated by selecting item 14 (PBD SW BYPASS) and then item 15 (OPEN). This can be used in the event of a switch failure or if the crew does not want to go to the aft station). The status of the doors is displayed on the OP/CL STATUS line of the display.

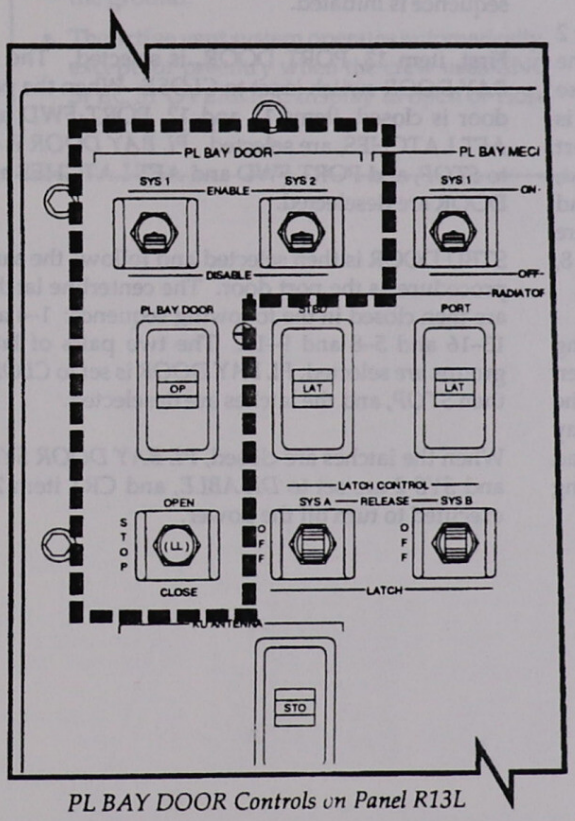

PL BAY DOOR Controls on Panel R13L

If item 14 is not selected, the *PL BAY DOOR* switch on panel R13L is set to *OPEN*, which initiates the auto sequence, centerline latches first. The status of the sequence as it proceeds can be monitored on the display. When OP/CL status of the door shows OP, the panel R13L *PL BAY DOOR* switch is set to *STOP*, *PL BAY DOOR SYS 1* and *SYS 2* are set to *DISABLE*, item 2 on the CRT (AC POWER OFF) is executed, and the payload bay floodlights are turned off.

Opening Doors in Manual Mode

The software does not monitor the latch and door opening during the manual mode as it does with the auto mode. The crew must monitor the limit-switch indications and motor drive times very carefully to determine if the doors and latches are opening properly. Any latch or door can be driven out of sequence (i.e., the bulkhead latches can be opened first). The crew should verify that the two gold bands are showing on each of the six push rods on the port and starboard doors. This indicates the doors are open, and no warping or jamming has occurred.

To open the doors using the manual mode, the crew sets the *PL BAY DOOR* switch on panel R13L to *STOP*, executes item 1, AC POWER ON, of the PL BAY DOORS display, and sets panel R13L *PL BAY DOOR SYS 1* and *SYS 2* switches to *ENABLE*. Then the manual sequence is initiated.

First, the centerline latches are opened. Using the display, items 4 and 5 are executed in sequence to open centerline latches 5 through 8 and 9 through 12. The *PL BAY DOOR* switch on panel R13L is set to *OPEN*. When the display indicates OP for centerline latches 5–8 and 9–12, the *PL BAY DOOR* switch is set to *STOP*. Centerline latches 5–8 and 9–12 are deselected on the CRT, and then centerline latches 1–4 and 13–16 are selected. The *PL BAY DOOR* switch is set to *OPEN*. When the display indicates that centerline latches 1–4 and 13–16 are open, the *PL BAY DOOR* switch is set to *STOP*. Centerline latches 1–4 and 13–16 are deselected on the CRT.

Next, the starboard forward and aft latches and door are opened. Items 8 and 9, STB FWD LATCHES and AFT LATCHES, are selected on the CRT. The *PL BAY DOOR* switch is set to *OPEN*. When the display indicates the latches are open, *PL BAY DOOR* is set to *STOP*. The latches are deselected, and item 10, STBD DOOR, is selected. The *PL BAY DOOR* switch is set to *OPEN* and then to *STOP* when the display shows OP. STBD DOOR is deselected on the CRT.

Finally, the port forward and aft latches and door are opened, using items 11, 12, and 13 to follow a sequence nearly identical to the one described above for the starboard door. The exception is that after the door is opened, and *PL BAY DOOR* switch is set to *STOP*, *PL BAY DOOR SYS 1* and 2 switches are set to *DISABLE* before deselecting PORT DOOR. Item 2 is then executed to turn AC POWER OFF, and the payload bay floods are also turned off.

Payload Bay Doors: Closing

The payload bay doors are closed approximately 2 hours and 45 minutes before the deorbit burn. The sequence for closing the doors is the direct reverse of the sequence for opening them. The port door is closed first, followed by the port forward and port aft bulkheads. The starboard door is closed next, followed by the starboard forward and aft bulkhead latches. Finally, the centerline latch groups are closed in the following order: 1 to 4, 13 to 16, 5 to 8, and 9 to 12.

The crew can use an auto or manual mode for closing the doors. The difference in monitoring between the two modes is the same as it is for opening the doors. Panel R13L and the PL BAY DOORS display are also used for closing the doors. The payload bay doors are normally opened and closed using the auto mode.

Closing Doors in Auto Mode

To close the doors using the auto mode, the crew sets the *PL BAY DOOR* switch on panel R13L to *STOP*. Item 1 on the PL BAY DOORS display is executed to turn ac power on, and item 3, AUTO MODE SEL, is executed. The auto sequence is initiated by placing the *PL BAY DOOR SYS 1* and *SYS 2* switches on panel R13L to *ENABLE* and then setting the *PL BAY DOOR* switch to *CLOSE*. The status of the sequence is displayed on the CRT. When the sequence is complete, the *PL BAY DOOR* switch is set to *STOP*, *PL BAY DOOR SYS 1* and *SYS 2* are set to *DISABLE*, and item 2 on the CRT is executed to turn ac power off.

Closing Doors in Manual Mode

To close the doors using the manual mode, the crew sets the *PL BAY DOOR* switch to *STOP*, executes item 1 on the display, and sets *PL BAY DOOR SYS 1* and *SYS 2* switches to *ENABLE*. Then the manual sequence is initiated.

First, item 13, PORT DOOR, is selected. The *PL BAY DOOR* switch is set to *CLOSE*. When the port door is closed, items 11 and 12, PORT FWD and AFT LATCHES, are selected. *PL BAY DOOR* is set to *STOP*, and PORT FWD and AFT LATCHES and DOOR are deselected.

STBD DOOR is then selected and follows the same procedure as the port door. The centerline latches are then closed in the following sequence: 1–4 and 13–16 and 5–8 and 9–12. The two pairs of latch groups are selected, *PL BAY DOOR* is set to *CLOSE*, then *STOP*, and the latches are deselected.

When the latches are closed, *PL BAY DOOR SYS 1* and *SYS 2* are set to *DISABLE*, and CRT item 2 is executed to turn off the power.

Mechanical Systems Summary Data

- Orbiter mechanical systems are those components that must be deployed, stowed, opened, or closed. Each is physically moved by an electrical or hydraulic actuator.
- All orbiter electromechanical actuators contain two three-phase ac motors, brakes, a differential, a gearbox, and limit switches. With the exception of the vent doors and ET door centerline latches, all actuator assemblies also contain torque limiters.
- Power for actuator motors and limit switches is provided by motor control assemblies that are controlled by panel MA73C.
- The active vent system equalizes the unpressurized orbiter compartments and controls the orbiter's internal environment by opening and closing vent doors in orbit or on the ground.
- The active vent system operates automatically, except for preentry when the crew uses GNC SPEC 51 OVERRIDE display to open or close the vent doors.
- The external tank umbilical doors shield the two aft umbilical openings on the underside of the orbiter. The doors are closed post-OMS 1 burn after MPS vacuum inerting.
- ET umbilical doors are controlled by the flight crew with switches on panel R2 or item entry on the GNC SPEC 51 OVERRIDE display.
- The payload bay doors provide an opening for payload deployment from and retrieval into the payload bay.
- Two doors, port and starboard, are connected to the midfuselage. They are held closed by groups of centerline and bulkhead latches.
- Payload bay doors are opened approximately 1 hour and 25 minutes into a nominal flight and closed about 2 hours and 45 minutes before the deorbit burn.
- Payload bay doors displays and controls are on panel R13L and the PL BAY DOORS display.

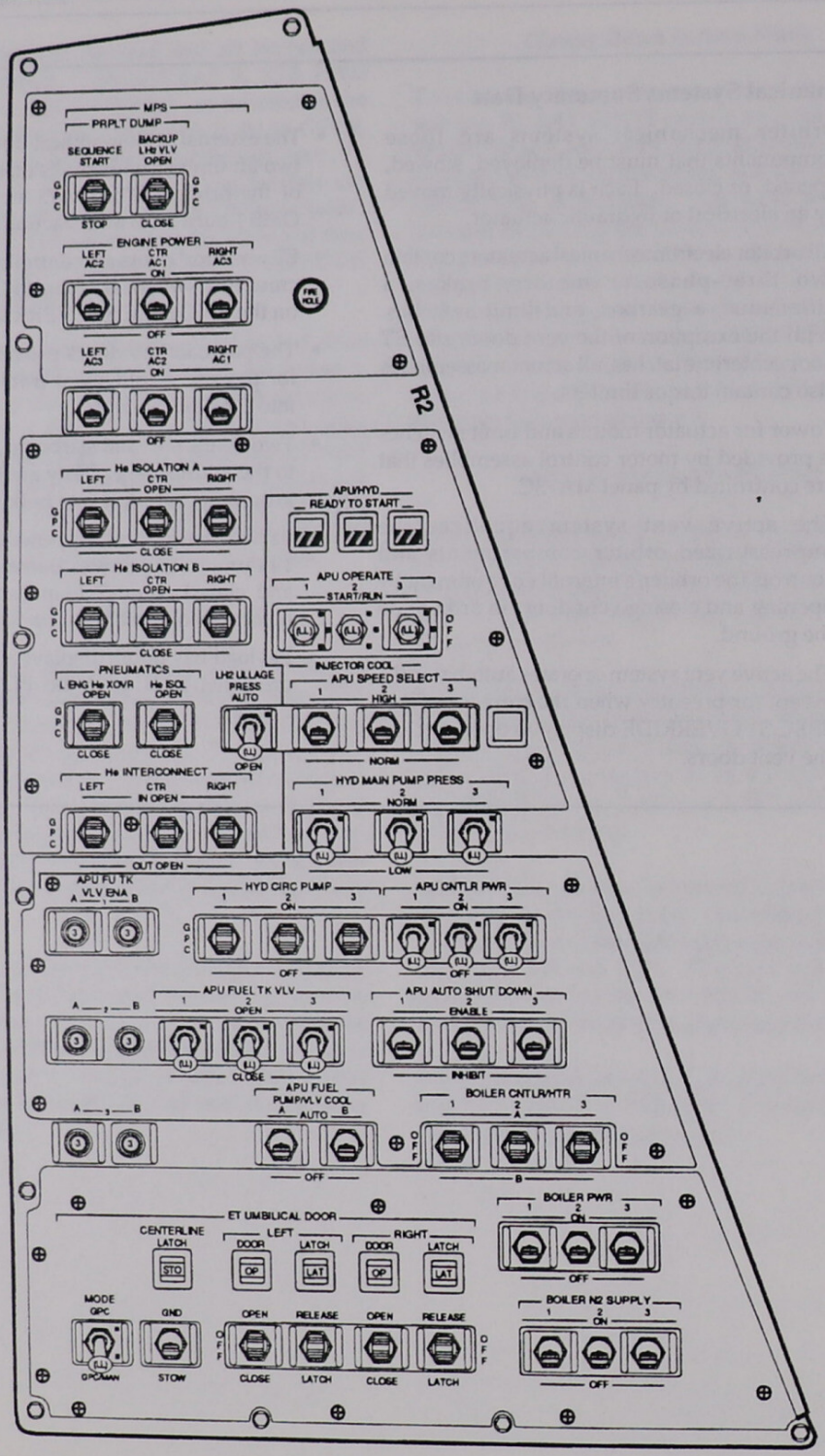
MPS
PRPLT DUMP
SEQUENCE START
BACKUP LH2 VLV OPEN
GPC
STOP
CLOSE
ENGINE POWER
LEFT AC2
CTR AC1
RIGHT AC3
ON
OFF
LEFT AC3
CTR AC2
RIGHT AC1
ON
OFF
R2
He ISOLATION A
LEFT
CTR
RIGHT
OPEN
CLOSE
He ISOLATION B
LEFT
CTR
RIGHT
OPEN
CLOSE
PNEUMATICS
L ENG He XOVR OPEN
He ISOL OPEN
CLOSE
CLOSE
LH2 ULLAGE PRESS
AUTO
OPEN
He INTERCONNECT
LEFT
CTR
RIGHT
IN OPEN
OUT OPEN
APU/HYD
READY TO START
APU OPERATE
START/RUN
OFF
INJECTOR COOL
APU SPEED SELECT
HIGH
NORM
HYD MAIN PUMP PRESS
NORM
LOW
APU FU TK VLV ENA
A
B
HYD CIRC PUMP
ON
OFF
APU CNTLR PWR
ON
OFF
APU FUEL TK VLV
OPEN
CLOSE
APU AUTO SHUT DOWN
ENABLE
INHIBIT
APU FUEL PUMP/VLV COOL
A
AUTO
B
OFF
BOILER CNTLR/HTR
A
B
OFF
OFF
ET UMBILICAL DOOR
CENTERLINE LATCH
LEFT DOOR
LEFT LATCH
RIGHT DOOR
RIGHT LATCH
STO
OP
LAT
OP
LAT
MODE
GPC
GND
OPEN
RELEASE
OPEN
RELEASE
OFF
OFF
GPC/MAN
STOW
CLOSE
LATCH
CLOSE
LATCH
BOILER PWR
ON
OFF
BOILER N2 SUPPLY
ON
OFF

Panel R2

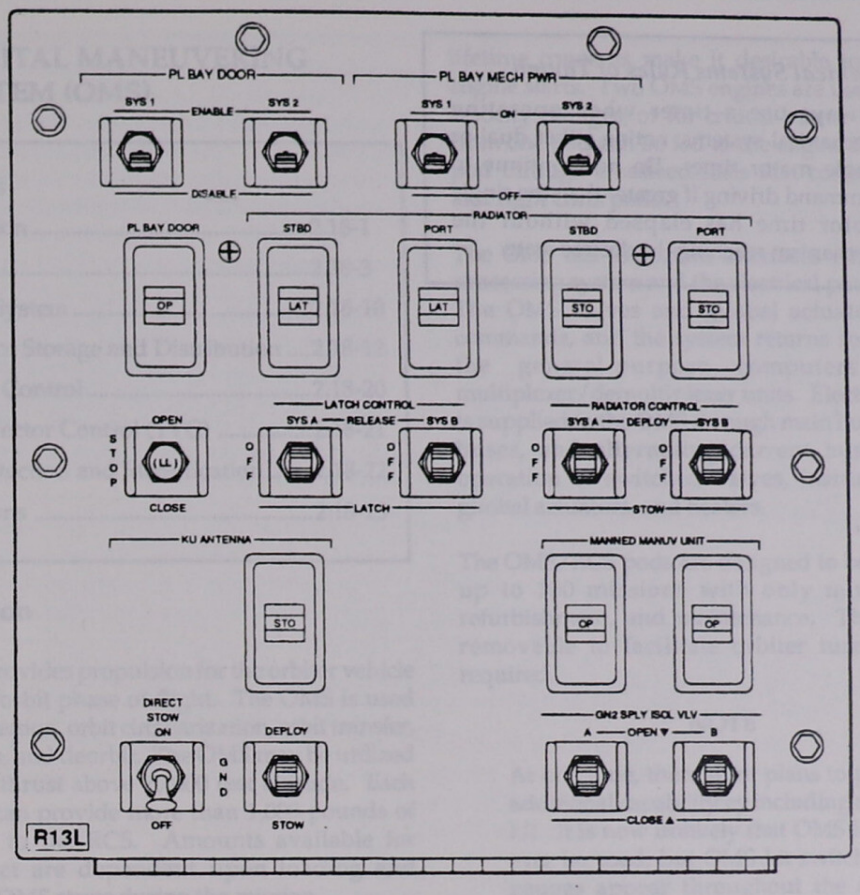

Panel R13L

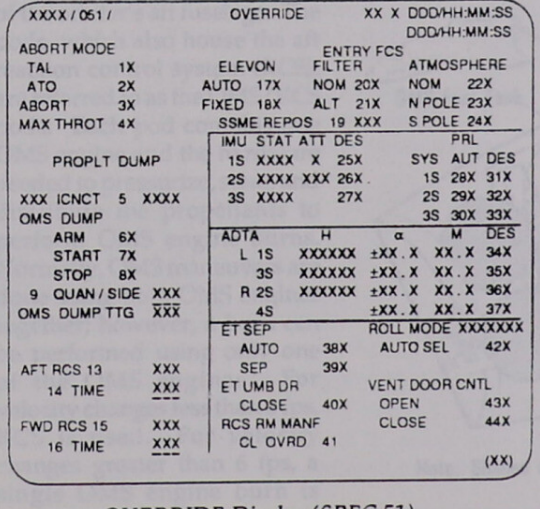

OVERRIDE Display (SPEC 51)

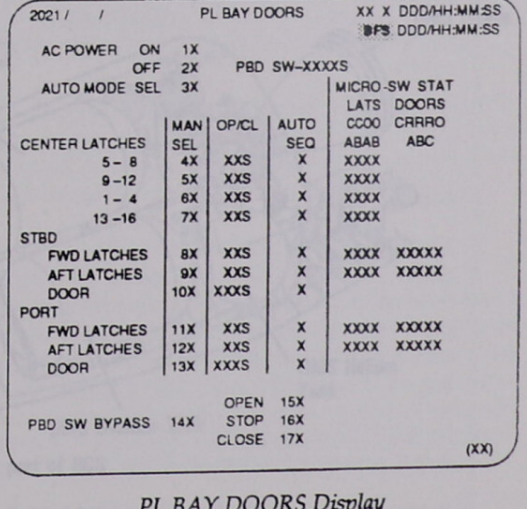

PL BAY DOORS Display

Mechanical Systems Rules of Thumb

- Always use a timer when operating mechanical systems, noting either dual or single motor time. Do not continue to command driving if greater than the single motor time has elapsed without the mechanism reaching the desired state.

2.18 ORBITAL MANEUVERING SYSTEM (OMS)

CONTENTS

Description 2.18-1
Engines 2.18-3
Helium System 2.18-10
Propellant Storage and Distribution 2.18-12
Thermal Control 2.18-20
Thrust Vector Control (TVC) 2.18-21
Fault Detection and Identification 2.18-22
Operations 2.18-23

Description

The OMS provides propulsion for the orbiter vehicle during the orbit phase of flight. The OMS is used for orbit insertion, orbit circularization, orbit transfer, rendezvous, and deorbit. The OMS may be utilized to provide thrust above 70,000 feet altitude. Each OMS pod can provide more than 1,000 pounds of propellant to the RCS. Amounts available for interconnect are dependent upon loading and number of OMS starts during the mission.

The OMS is housed in two independent pods on each side of the orbiter's aft fuselage. The pods, which also house the aft reaction control system (RCS), are referred to as the OMS/RCS pods. Each pod contains one OMS engine and the hardware needed to pressurize, store, and distribute the propellants to perform OMS engine burns. Normally, OMS maneuvers are done using both OMS engines together; however, a burn can be performed using only one of the OMS engines. For velocity changes less than 6 fps, RCS is used. For velocity changes greater than 6 fps, a single OMS engine burn is preferred, because engine lifetime concerns make it desirable to minimize engine starts. Two OMS engines are used for large velocity changes, or for critical burns. Propellant from one pod can be fed to the engine in the other pod through crossfeed lines that connect the left and right OMS pods.

The OMS has important interfaces with the data processing system and the electrical power system. The OMS valves and gimbal actuators receive commands, and the system returns some data to the general-purpose computers through multiplexer/demultiplexer units. Electrical power is supplied to the OMS through main buses, control buses, and alternating current buses for the operation of switches, valves, instrumentation, gimbal actuators, and heaters.

The OMS/RCS pods are designed to be reused for up to 100 missions with only minor repair, refurbishment, and maintenance. The pods are removable to facilitate orbiter turnaround, if required.

NOTE

At one time, there were plans to provide additional capability by including an OMS kit. It is now unlikely that OMS kits will ever be used, but OMS kit switches and gauges appear throughout the orbiter. These switches and gauges are currently inoperative and are likely to remain so.

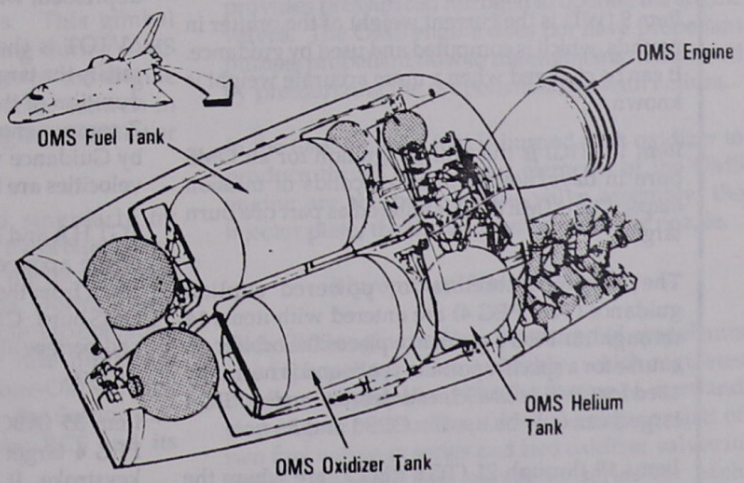

Note: Shaded areas part of RCS

Orbital Maneuvering System

Maneuver Display

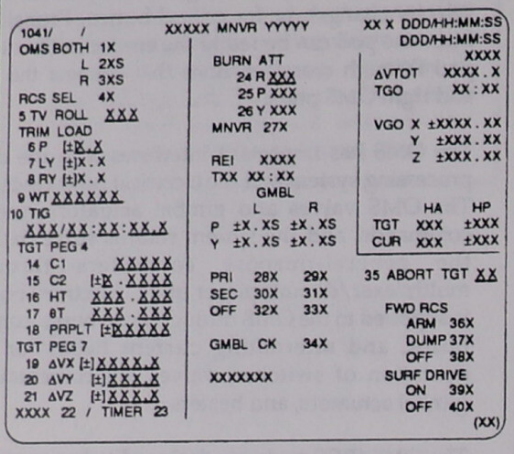

Items 1 through 4 (OMS BOTH, L, R, and RCS SEL) are used to select both OMS engines, one engine, or RCS jets for an OMS burn and are mutually exclusive item entries. This information is used by guidance and the OMS software.

Item 5 (TV ROLL) is the roll attitude for OMS burns. Normally, it is 180 degrees, which corresponds to a heads-down attitude. A different number can be entered in MM 202 only, but it is seldom changed.

Items 6 through 8 (TRIM LOAD P, LY, RY) are used to enter gimbal trim angles for OMS burns.

Item 9 (WT) is the current weight of the orbiter in pounds, which is computed and used by guidance. It can be changed when a more accurate weight is known.

Item 10 (TIG) is the time of ignition for an OMS burn in days/hours:minutes:seconds of mission elapsed time (MET). It is entered as part of a burn target.

The target parameters for powered explicit guidance (TGT PEG 4) are entered with items 14 through 18. PEG 4 guidance places the orbiter on course for a specific point in space and is normally used for OMS 1, OMS 2, and deorbit burns. PEG 4 targets can only be used in OPS 1 and 3.

Items 19 through 21 (TGT PEG 7) are where the target parameters are entered for another type of guidance, which is known as PEG 7 or External ΔV guidance. It is used to add or subtract orbital velocity and does not target the vehicle for a specific point in space. PEG 7 targets can be used in OPS 1, 2, or 3. PEG 7 delta velocities are in the LVLH coordinate frame.

Executing item 22 (LOAD) causes guidance to compute a burn solution on the basis of the target parameters that have been entered under PEG 4 or PEG 7. Executing item 23 (TIMER) sets up a timer, which counts down to time of ignition and is displayed on the second line at the upper right corner of the display.

Items 24 through 26 (BURN ATT) are the desired inertial attitude for the OMS burn, which guidance computes as part of the burn solution. Executing item 27 (MNVR) causes an automatic maneuver to this attitude.

The GMBL L, R items on the display are the actual gimbal position angles. Items 28 through 33 (PRI, SEC, OFF) permit selection of primary or secondary gimbal motors or turn off both gimbal motors.

Executing item 34 (GMBL CK) starts an automatic gimbal check sequence.

The EXEC item flashes on the screen 15 seconds before TIG and remains there until the EXEC key is depressed, which enables OMS burn ignition.

ΔVTOT is the total change in velocity needed to satisfy the target requirements. TGO is the expected duration of the burn. Below that are the X, Y, and Z components of ΔVTOT. All of this is computed by Guidance when a target is loaded. These delta velocities are in the body axis coordinate frame.

TGT HA and HP are the altitudes in nautical miles of the apogee and perigee for the orbit that will result from the successful completion of the targeted OMS burn. CUR HA and HP are the current apogee and perigee altitudes. Mileages are from the Earth's surface.

Item 35 (ABORT TGT) permits entry of a stored PEG 4 target for OMS 1 or OMS 2 with a single keystroke. It is used primarily for calling up ATO and AOA targets.

Flight software is divided into operational sequences (OPS) that are subdivided into major modes (MM). Operational sequences and major modes are discussed in detail in Section 2.6; however, it should be noted that OMS burns can only be performed in MM 104, 105, 202, and 302. OMS dumps can be performed in MM 102, 103, 304, 601, and 602.

The maneuver (MNVR) display appears automatically in MM 104, 105, 106, 202, 301, 302, and 303. The title has a prefix and a suffix that vary according to major mode. The BFS version of the display is identical to the primary display. Items on the display are numbered from 1 to 40.

Major mode	Title	Mission phase
MM 104	OMS 1 MNVR EXEC	OMS 1 burn
105	OMS 2 MNVR EXEC	OMS 2 burn
106	OMS 2 MNVR COAST	Post-OMS 2 coast
202	ORBIT MNVR EXEC	Orbital maneuvers
301	DEORB MNVR COAST	Pre-deorbit coast
302	DEORB MNVR EXEC	Deorbit burn
303	DEORB MNVR COAST	Post-deorbit coast

Maneuver Display Titles Associated With Major Modes

Engines

The OMS engines are designated left and right, descriptive of location. The engines are located in gimbal mounts that allow the engine to pivot left and right and up and down under the control of two electromechanical actuators. This gimbal system provides for vehicle steering during OMS burns by controlling the direction of the engine thrust in pitch and yaw (thrust vector control) in response to commands from the digital autopilot or from the manual controls.

The OMS engines can be used singularly by directing the thrust vector through the orbiter center of gravity or together by directing the thrust vector of both engines parallel to the X axis. During a two-OMS-engine burn, the RCS will come into operation only if the attitude or attitude rate limits are exceeded. However, during a one-OMS-engine burn, RCS roll control is required. See Section 2.20 for further information about the RCS and its interaction with the OMS.

Each of the two OMS engines produces 6,000 pounds of thrust. The oxidizer-to-fuel ratio is 1.65:1. The expansion ratio of the nozzle exit to the throat is 55:1. The chamber pressure of the engine is 131 psia. The dry weight of each engine is 260 pounds. For a typical orbiter weight, both engines together create an acceleration of approximately 2 ft/sec^2 or 0.06 g's. Using up a fully loaded tank, the OMS can provide a total velocity change of approximately 1,000 ft/sec. Orbital insertion burns and deorbit burns each typically require a velocity change of about 100–500 ft/sec. The velocity change required for orbital adjustment is approximately 2 ft/sec for each nautical mile of altitude change.

Each OMS engine is capable of 1,000 starts and 15 hours of cumulative firing. The minimum duration of an OMS engine firing is 2 seconds.

The OMS engines use monomethyl hydrazine as the fuel and nitrogen tetroxide as the oxidizer. These propellants are hypergolic, which means that they ignite when they come in contact with each other; therefore, no ignition device is needed. Both propellants remain liquid at the temperatures normally experienced during a mission. However, electrical heaters are located throughout the OMS pods to prevent any freezing of propellants during long periods in orbit when the system is not in use.

Each OMS engine has a gaseous nitrogen tank that provides pressurized nitrogen to operate the engine valves. The OMS engine does not have propellant pumps; propellant flow to the engines is maintained by pressurizing the propellant tanks with helium.

In the OMS engine, fuel is burned with oxidizer to produce thrust. The major elements of the OMS engine are the bipropellant valve assembly, the injector plate, the thrust chamber, and the nozzle.

Bipropellant Valve Assembly

Each OMS engine receives pressure-fed propellants at a bipropellant valve assembly, which regulates the flow of propellants to the engine to start and stop engine burns. The valve assembly consists of two fuel valves in series and two oxidizer valves in series. Having two valves in series for each

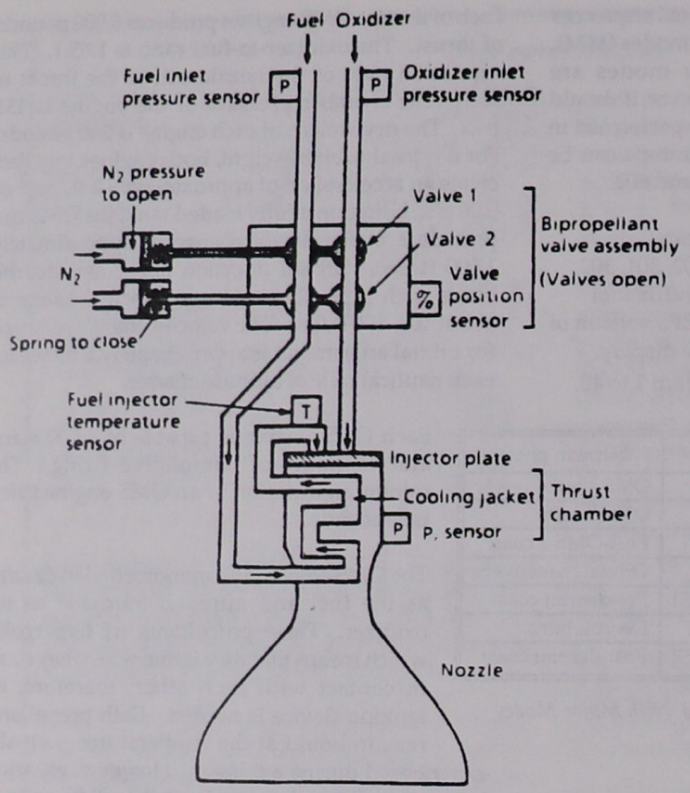

Orbital Maneuvering System Engine

propellant provides redundant protection against leakage, but it also means that both valves must open to allow propellant flow to the engine.

Each fuel valve is mechanically linked to an oxidizer valve so that they open and close together. The name bipropellant valve comes from the fact that each linked set of valves controls the flow of both propellants.

The bipropellant valves are ball valves that rotate from fully closed (0 percent) to fully open (100 percent). The valve position in percent for each set can be read by the crew on the GNC SYS SUMM 2 display. The VLV 1 and 2 position indicators on the display should read approximately 100 percent for both valve 1 and valve 2 at the start of an OMS burn and remain there throughout the burn. If the valve position is less than 70 percent for either valve, there will probably be insufficient propellant flow, and ignition may not occur. Also, ignition may occur with the possibility of engine hard start or combustion instability resulting in structural failure and/or chamber burnthrough.

The bipropellant valves are driven open and closed by pneumatic pistons. There is one piston for each set of bipropellant valves. The pistons are normally held in the closed position by springs. Pressurized nitrogen is used to fill the piston, which then mechanically opens the bipropellant valves. The engine control valves regulate the flow of nitrogen to the pistons and thereby control the opening and closing of the bipropellant valves. The engine control valve is a solenoid valve that responds to commands from the GPCs. Both engine control valves must operate in order for the bipropellant valves to open.

The engine control valves are discussed in more detail in the next section on the nitrogen system.

Injector Plate

After passing through the bipropellant valves, the oxidizer line runs directly to the engine injector plate. The fuel, however, is used to cool the engine, and so it is routed through a cooling jacket around the thrust chamber before it reaches the injector plate. A temperature sensor is located near the fuel inlet to the injector, and the reading from this sensor can be viewed by the crew in the FU INJ T entry on the BFS GNC SYS SUMM 2 display. This parameter does not appear on the PASS GNC SYS SUMM 2 display, but can be found on SM DISP 89 PRPLT THERMAL in OPS 2.

Since the fuel injector temperature is the temperature of the fuel after it has passed through the chamber cooling jacket, it provides an indirect indication of the temperature of the thrust chamber walls. A high fuel injector temperature indicates that the engine may be sustaining thermal damage. The fuel normally flows to the engine at a temperature between 30° and 125° F. During engine operation, when the fuel is cooling the chamber,

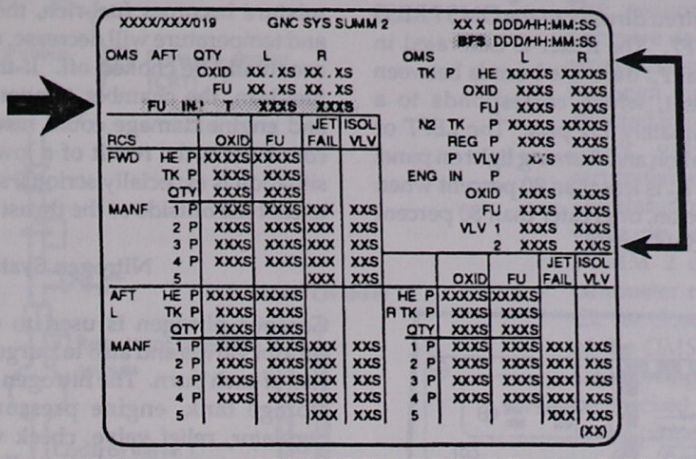

OMS Parameters on BFS GNC SYS SUMM 2 Display (DISP 19)

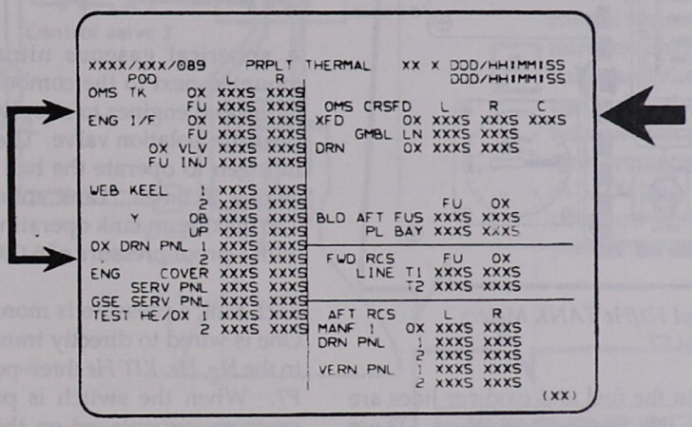

OMS Parameters on SM DISP 89 PRPLT THERMAL Display

the fuel injector temperature should be approximately 218° F. The temperature limit for safe operation is 260° F.

Thrust Chamber

The fuel and oxidizer are mixed at the injector plate in the thrust chamber. When the fuel reaches the thrust chamber, it is directed through 120 cooling channels in the combustion chamber walls, providing regenerative cooling to the combustion chamber walls, and then to the injector of the engine. The oxidizer is routed directly to the injector. The platelet injector assembly consists of a stack of plates, each with an etched pattern that provides proper distribution and propellant injection velocity vector. The stack is diffusion-bonded and welded to the body of the injector.

The fuel and oxidizer orifices are positioned so that the propellants will impinge and atomize, causing the fuel and oxidizer to ignite because of hypergolic reaction. The resulting hot gas creates thrust as it exits the chamber and expands through the engine nozzle. The contoured nozzle extension is bolted to the aft flange of the combustion chamber. The nozzle extension is made of a columbium alloy and is radiantly cooled.

The pressure in the thrust chamber (P_c) is measured by a sensor that is wired directly to the OMS PRESS P_c meter on panel F7. The meter is calibrated in percent. The normal P_c during a burn is between 100 and 105 percent, which corresponds to a pressure of approximately 131 psia. The *LEFT* or *RIGHT OMS* red caution and warning light on panel F7 will illuminate if P_c is less than 80 percent when the engine should be on, or greater than 80 percent when the engine should be off.

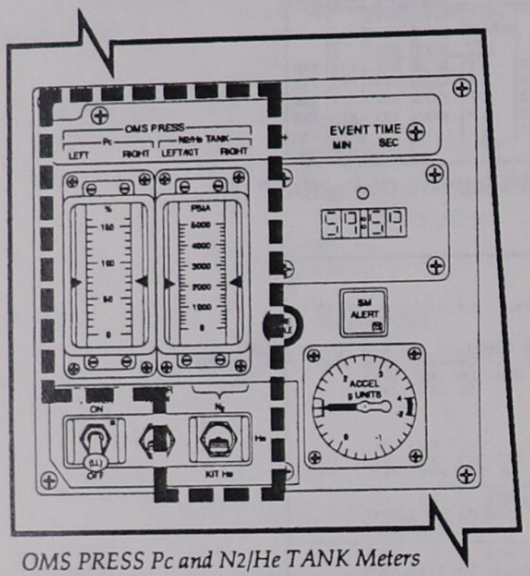

OMS PRESS Pc and N2/He TANK Meters and Switch on Panel F7

Pressure sensors in the fuel and oxidizer lines are located just above the bipropellant valves. These inlet pressures for each engine are shown on the GNC SYS SUMM 2 display as ENG IN P, one for oxidizer, one for fuel. When the OMS engines are not burning, the inlet pressures should match the propellant tank pressures, which are normally 254 psi. During OMS burns, propellant flow into the thrust chamber causes the inlet pressure to drop to approximately 220 to 235 psi for the fuel and to 200 to 206 psi for the oxidizer, but the propellant tank pressures remain higher. The exact inlet pressures are engine dependent.

The inlet pressures are an indirect indication of propellant flow rates. If they are abnormal, problems should be anticipated. An imbalance in the flow rates for fuel and oxidizer will result in an incorrect mixture ratio in the thrust chamber. If the mixture becomes fuel-rich, the chamber pressure and temperature will decrease, and combustion will eventually be choked off. If the mixture becomes fuel-lean, the chamber temperature will increase, and engine damage could result. If the fuel-lean condition is the result of a low fuel flow rate, the situation is especially serious, since the fuel is used to cool the outside of the thrust chamber.

Nitrogen System

Gaseous nitrogen is used to operate the engine control valves and also to purge the fuel lines at the end of each burn. The nitrogen system consists of a storage tank, engine pressure isolation valve, regulator, relief valve, check valve, accumulator, engine purge valves, bipropellant solenoid control valves, and actuators that control the bipropellant ball valves.

A spherical gaseous nitrogen storage tank is mounted next to the combustion chamber in each of the two engines to supply pressure to its engine pressure isolation valve. The tank contains enough nitrogen to operate the ball valves and purge the engine 10 times. Tank volume is 60 cubic inches. The maximum tank operating pressure is 3,000 psi, with a proof pressure of 6,000 psig.

Each tank's pressure is monitored by two sensors. One is wired to directly transmit the tank pressure to the *N_2, He, KIT He* three-position switch on panel F7. When the switch is positioned to N_2, tank pressure is displayed on the OMS PRESS N_2/He TANK LEFT/KIT, RIGHT meter on panel F7. The other sensor displays on the GNC SYS SUMM 2 display (N2 TK P, L and R). Both pressures are downlisted by telemetry.

A dual-coil, solenoid-operated nitrogen pressure isolation valve (sometimes called the engine pressure valve) is located in each gaseous nitrogen system. The valve is energized open and spring-loaded closed. It must be open for nitrogen to reach the OMS engines. The valve permits gaseous nitrogen flow from the tank to the regulator, accumulator, bipropellant ball valve control valves, and purge valves 1 and 2 when energized open and isolates the nitrogen tank from the gaseous nitrogen supply system when closed.

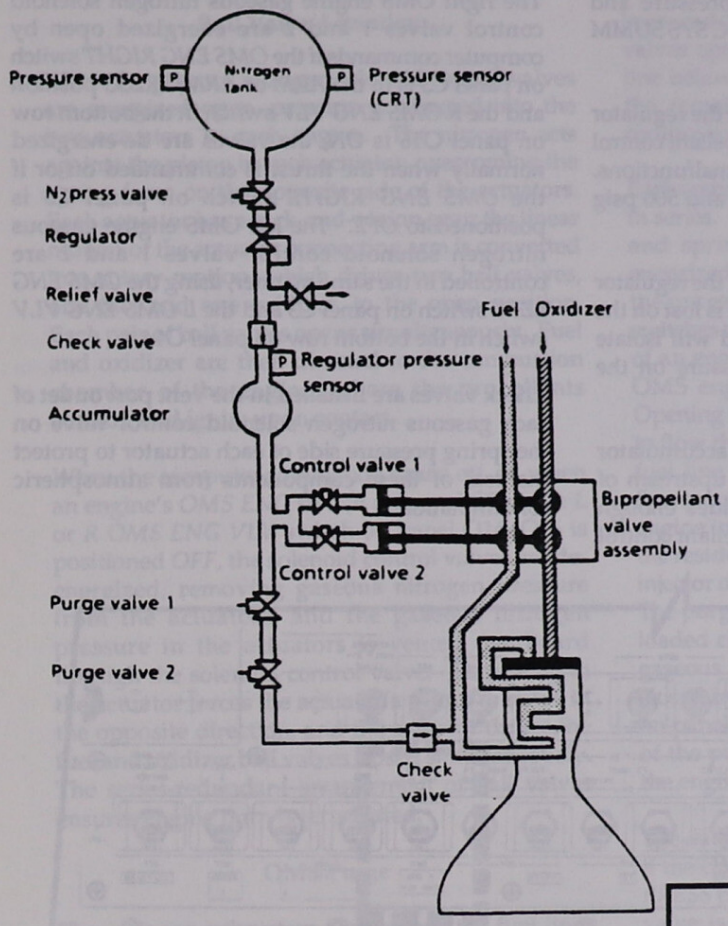

Nitrogen System

The nitrogen pressure valves in each system are controlled by the *OMS ENG LEFT, RIGHT* switches on panel C3. Placing the switch in the *ARM/PRESS* position opens the nitrogen pressure valve. The switch is placed in the *ARM/PRESS* position by the crew before each OMS burn and is left in the *OFF* position at all other times. When the *OMS ENG LEFT* switch is placed in the *ARM/PRESS* position, the left OMS engine pod's pressure isolation valve is energized open. When the *OMS ENG RIGHT* switch is placed in the *ARM/PRESS* position, the right OMS engine pod's pressure isolation valve is energized open. When the switches are in any other position (*ARM* or *OFF*), the valve remains closed, and no tank nitrogen reaches the OMS engines.

The gaseous nitrogen engine pressure isolation valve, when energized open, allows gaseous nitrogen supply pressure to be directed into a regulator, through a check valve and an in-line accumulator, and to a pair of valves. The status of the nitrogen pressure valve can be seen on the GNC SYS SUMM 2 display: the P VLV parameter reads OP for open and CL for closed. When the position of the *OMS ENG* switch on panel C3 is changed, the display should be checked to see that the valve is in the proper position.

A single-stage regulator is installed in each gaseous nitrogen pneumatic control system between the gaseous nitrogen engine pressure isolation valve and the engine bipropellant control valves. The regulator reduces nitrogen pressure from its tank pressure, which can be as high as 3,000 psig, to a desired working pressure of 315 to 360 psig. A pressure sensor downstream of the

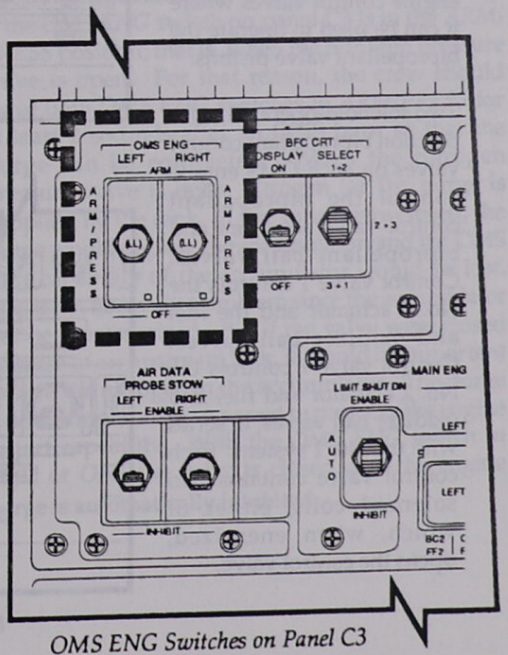

OMS ENG Switches on Panel C3

regulator monitors the regulated pressure and transmits it to telemetry and to the GNC SYS SUMM 2 display (REG P).

A pressure relief valve downstream of the regulator limits the pressure to the engine bipropellant control valves and actuators if a regulator malfunctions. The relief valve relieves between 450 and 500 psig and reseats at 400 psig minimum.

The check valve located downstream of the regulator will close if gaseous nitrogen pressure is lost on the upstream side of the check valve and will isolate the remaining gaseous nitrogen pressure on the downstream side of the check valve.

The 19-cubic-inch gaseous nitrogen accumulator downstream of the check valve and upstream of the bipropellant control valves provides enough pressure to operate the engine bipropellant control valves one time with the engine pressure isolation valve closed, or in the event of loss of pressure on the upstream side of the check valve. The accumulator is protected from upstream leaks by a one-way check valve. From the accumulator, the nitrogen flows to the engine control valves where it can be used to operate the bipropellant valve pistons.

Two solenoid-operated, two-position bipropellant control valves on each OMS engine control the bipropellant control valve actuators and bipropellant ball valves. Control valve 1 controls the No. 1 actuator and the fuel and oxidizer ball valves. Control valve 2 controls the No. 2 actuator and fuel and oxidizer ball valves, in series with the No. 1 system. Each control valve contains two solenoid coils, either of which, when energized, opens the control valve.

The right OMS engine gaseous nitrogen solenoid control valves 1 and 2 are energized open by computer commands if the *OMS ENG RIGHT* switch on panel C3 is in the *ARM* or *ARM/PRESS* position and the *R OMS ENG VLV* switch in the bottom row on panel O16 is *ON*; the valves are de-energized normally when the thrust is commanded off or if the *OMS ENG RIGHT* switch on panel C3 is positioned to *OFF*. The left OMS engine gaseous nitrogen solenoid control valves 1 and 2 are controlled in the same manner, using the *OMS ENG LEFT* switch on panel C3 and the *L OMS ENG VLV* switch in the bottom row on panel O14.

Check valves are installed in the vent port outlet of each gaseous nitrogen solenoid control valve on the spring pressure side of each actuator to protect the seal of these components from atmospheric contamination.

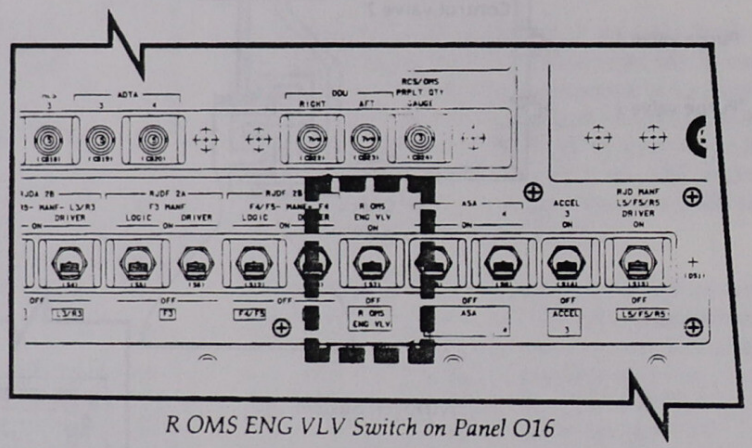

R OMS ENG VLV Switch on Panel O16

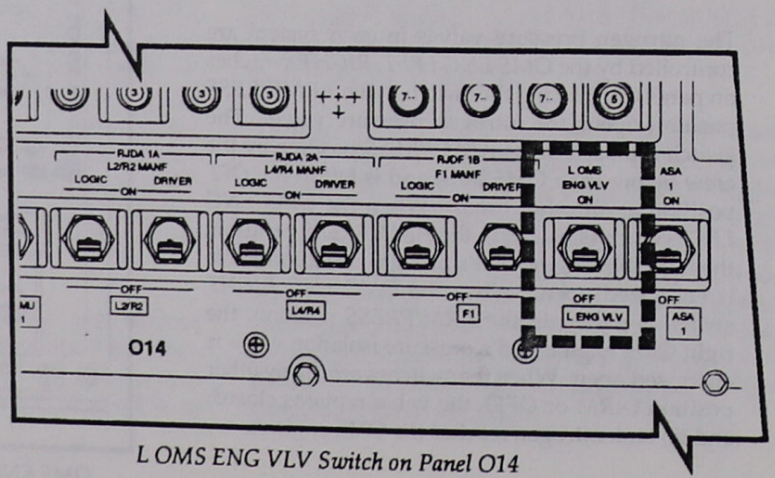

L OMS ENG VLV Switch on Panel O14

Ball Valve Actuation

When the gaseous nitrogen solenoid control valves are energized open, pressure is directed into the two actuators in each engine. The nitrogen acts against the piston in each actuator, overcoming the spring force on the opposite side of the actuators. Each actuator has a rack-and-pinion gear; the linear motion of the actuator connecting arm is converted into rotary motion, which drives two ball valves, one fuel and one oxidizer, to the open position. Each pair of ball valves opens simultaneously. Fuel and oxidizer are then directed to the combustion chamber of the engine, where the propellants atomize and ignite upon contact.

When the computer commands thrust off, or when an engine's *OMS ENG* switch on panel C3 or the *L* or *R OMS ENG VLV* switch on panel O14/O16 is positioned *OFF*, the solenoid control valves are de-energized, removing gaseous nitrogen pressure from the actuators, and the gaseous nitrogen pressure in the actuators is vented overboard through the solenoid control valve. The spring in the actuator forces the actuator's piston to move in the opposite direction, and the actuator drives the fuel and oxidizer ball valves closed simultaneously. The series-redundant arrangement of ball valves ensures engine burn is terminated.

OMS Purge

The nitrogen subsystem also purges the fuel lines following OMS burns. After an OMS burn, some fuel and oxidizer will be left in the engine inlet lines and will be subject to cold temperatures. The oxidizer does not present a problem, but the fuel, which has a higher freezing point, could freeze, especially in the cooling jacket around the thrust chamber. The frozen fuel will eventually sublimate. But for the first 10 minutes or so following a burn, it might be dangerous to start another, since forcing more fuel into already frozen lines could cause damage.

This situation is avoided by forcing nitrogen through the fuel lines immediately after the engine shuts down. This purge is part of the automatic OMS burn sequence and takes about 2 seconds. When a burn ends, the control valves close, and the purge valves open. Nitrogen can then flow into the fuel line below the bipropellant valves where it forces the remaining fuel through the inlet lines and cooling jacket and out through the engine.

Each engine has two gaseous nitrogen purge valves in series. These valves are solenoid-operated open and spring-loaded closed. They are normally energized open by the GPCs after each burn unless the purge is inhibited by having the *OMS ENGINE* switches on panel C3 in *ARM*. The two purge valves of an engine are energized open 0.36 second after OMS engine thrust has been commanded off. Opening the purge valves permits gaseous nitrogen to flow through the valves and check valve into the fuel line downstream of the ball valves. It then flows out through the combustion chamber and engine injector to space for 2 seconds. This purges the residual fuel from the combustion chamber and injector of the engine, permitting safe engine restart. The purge valves are then de-energized and spring-loaded closed. When the purge is completed, the gaseous nitrogen tank pressure isolation valve is closed by placing the respective *OMS ENG* switch on panel C3 to *OFF*. The check valve downstream of the purge valves prevents fuel from flowing to the engine purge valves during engine burns.

The automatic software will perform the purge only if the *OMS ENG* switch on panel C3 is in the *ARM/PRESS* position; that is, when the nitrogen pressure valve is open. For that reason, the crew should leave both *OMS ENG* switches in *ARM/PRESS* for at least 2 seconds after an OMS burn so that the purge can be completed. When the nitrogen pressure valve is open, nitrogen for the purge is supplied by the tank. If the valve were closed, the purge would deplete the accumulator, and the OMS start capability of the accumulator would be lost. This is not normally a problem since the accumulator can be repressurized. But if the valve were closed because of an upstream leak, it would be important to save the nitrogen in the accumulator. The purge is not as important as the need to preserve the engine restart capability. With the *OMS ENG* switch in *ARM* or *OFF*, the valve is closed, and the engine purge is automatically inhibited.

Helium System

Each OMS pod helium pressurization system consists of a high-pressure gaseous helium storage tank, two helium pressure isolation valves, two dual pressure regulator assemblies, parallel vapor isolation valves on the regulated helium pressure to the oxidizer tank only, dual series-parallel check valve assemblies, and pressure relief valves.

Helium Tanks

Oxidizer and fuel are supplied to each OMS engine by separate sets of propellant tanks. The OMS engine does not have fuel or oxidizer pumps; propellant flow must be maintained by keeping the tanks pressurized with helium. A single helium tank provides pressurization to both fuel and oxidizer tanks. One advantage to having a single helium tank in each pod is that it helps ensure that the two propellant tanks remain at the same pressure and thus avoids incorrect mixture ratios.

The tank contains a supply of gaseous helium at a high pressure. Each helium storage tank in each pod has a titanium liner with a fiberglass structural overwrap. This increases safety and decreases the weight of the tank to 32 percent less than conventional tanks. The helium tank is 40.2 inches in diameter and has a minimum volume of 17.03 cubic feet. Its dry weight is 272 pounds. The helium tank's operating pressure range is 4,800 to 390 psia with a maximum operating limit of 4,875 psia at 200° F.

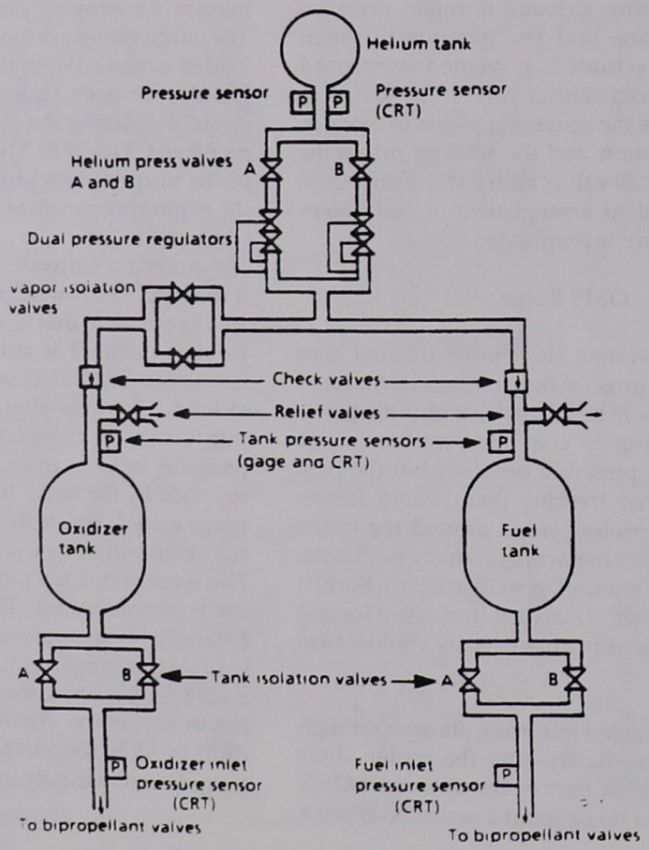

Propellant and Helium Supply

Two pressure sensors downstream of each helium tank in each pod monitor the helium source pressure. One transmits it to the OMS PRESS N_2/He meter on panel F7. When the switch below the meter is positioned to *He*, helium pressure of the left and right OMS is displayed. The reading from the other sensor appears on the GNC SYS SUMM 2 display (OMS TK P HE).

NOTE

Below a certain propellant quantity, there is enough residual helium pressure in the propellant tank to effectively extract the maximum amount of velocity from that tank. That is referred to as "max blowdown." Max blowdown for an OMS tank is approximately 39 percent.

Helium Pressure Valves

Two helium pressure valves in each pod permit helium source pressure to the propellant tanks or isolate the helium from the propellant tanks. The valves are in a parallel arrangement: the A helium pressure valve and B helium pressure valve. This arrangement provides redundant paths for the helium to reach the propellant tanks. These valves are held closed by springs and are opened by electrical solenoids.

The valves are controlled by the *LEFT* and *RIGHT OMS He PRESS/VAPOR ISOL* switches (one for valve A and one for valve B) on panel O8. The switches have manual *OPEN* and *CLOSE* positions and also a *GPC* position that allows the GPCs to control the valves automatically. These valves are normally closed at all times except during OMS burns. If the switches are in the *GPC* position, the automatic OMS burn sequence opens the helium pressure valves at the start of a burn and closes them at the end of a burn.

NOTE

When manually opening the *He PRESS/VAPOR ISOL* switches, delay 2 seconds between opening the A and B valves. This will prevent a possible water hammer effect.

Helium Pressure Regulators

Below each helium pressure valve is a pressure regulator that reduces the helium source pressure from its value in the tank, which can be as high as 4,800 psi (at launch), to the desired working pressure of approximately 250 psig. Each pressure regulator assembly contains a flow limiter and primary and secondary regulators in series. Normally, the primary regulator is the controlling regulator. The secondary regulator is normally open during a dynamic flow condition. It will not become the controlling regulator until the primary regulator allows a higher pressure than normal.

All regulator assemblies are in reference to a bellows assembly that is vented to ambient. The primary regulator outlet pressure at normal flow is 252 to 262 psig and 247 psig minimum at high abort flow, with lockup at 266 psig maximum. The secondary regulator outlet pressure at normal flow is 259 to

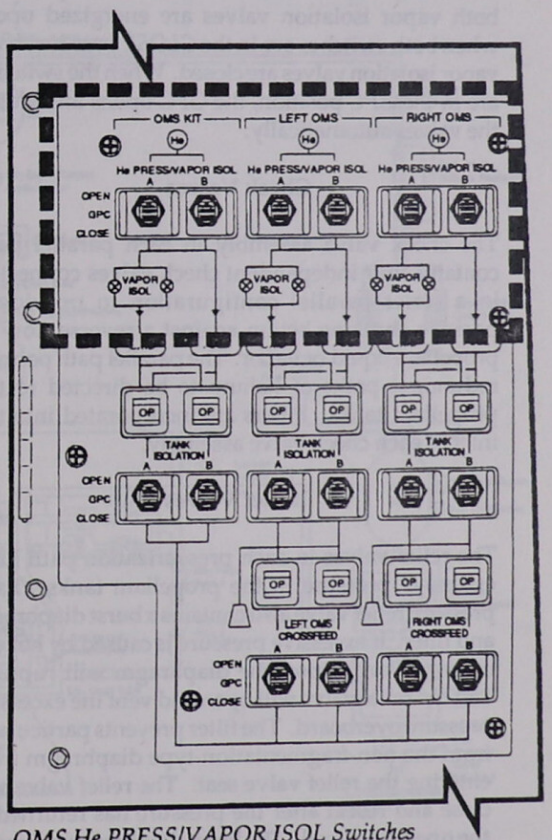

OMS He PRESS/VAPOR ISOL Switches on Panel O8

269 psig and 254 psig minimum at high abort flow, with lockup at 273 psig maximum. The flow limiter restricts the flow to a maximum of 1,040 standard cubic feet per minute and to a minimum of 304 standard cubic feet per minute.

Vapor Isolation Valves

Over a long period of time, it is possible for small amounts of propellant vapors to diffuse through the check valves and into the helium lines. The vapor isolation valves in the oxidizer pressurization line to the oxidizer tank prevent oxidizer vapor from migrating upstream and over into the fuel system and causing a hypergolic reaction. The upper isolation valves are low-pressure, two-position, solenoid-operated valves that are energized open and spring-loaded closed. They can be commanded automatically or manually by the positioning of the *LEFT* and *RIGHT OMS He PRESS/VAPOR ISOL* switches on panel O8. When either the *A* or *B* switch is in the *OPEN* position, both vapor isolation valves are energized open; when both switches are in the *CLOSE* position, both vapor isolation valves are closed. When the switches are in the *GPC* position, the GPC opens and closes the valves automatically.

Check Valves

The check valve assembly in each parallel path contains four independent check valves connected in a series-parallel configuration to provide a positive checking action against a reverse flow of propellant liquid or vapor. The parallel path permits redundant paths of helium to be directed to the propellant tanks. Filters are incorporated into the inlet of each check valve assembly.

Relief Valves

The relief valves in each pressurization path limit excessive pressure in the propellant tanks. Each pressure relief valve also contains a burst diaphragm and filter. If excessive pressure is caused by helium or propellant vapor, the diaphragm will rupture, and the relief valve will open and vent the excessive pressure overboard. The filter prevents particulates from the non-fragmentation-type diaphragm from entering the relief valve seat. The relief valve will close and reseat after the pressure has returned to the operating level. The burst diaphragm is used to provide a more positive seal of helium and propellant vapors than the relief valve. The diaphragm ruptures between 303 and 313 psig. The relief valve opens at a minimum of 286 psig and a maximum of 313 psig The relief valve's minimum reseat pressure is 280 psig. The maximum flow capacity of the relief valve at 60° F and 313 psig is 520 cubic feet per minute.

Propellant Storage and Distribution

The OMS propellant storage and distribution system consists of one fuel tank and one oxidizer tank in each pod. It also contains propellant feed lines, crossfeed lines, isolation valves, and crossfeed valves.

Propellant Tanks

The OMS propellant tanks of both pods enable the orbiter to perform a 1,000-foot-per-second velocity change with a 65,000-pound payload in the payload bay. An OMS pod crossfeed line allows the propellants in the pods to be used to operate either OMS engine.

Fuel (monomethyl hydrazine) and oxidizer (nitrogen tetroxide) are stored in domed cylindrical titanium tanks within each pod. Each propellant tank is 96.38 inches long with a diameter of 49.1 inches and a volume of 89.89 cubic feet unpressurized. The dry weight of each tank is 250 pounds. The propellant tanks are pressurized by the helium system. The nominal flow rate of oxidizer and fuel to each engine is 11.93 pounds per second and 7.23 pounds per second respectively, producing 6,000 pounds of thrust at a vacuum specific impulse of 313 seconds.

The tanks are divided into forward and aft compartments. Each tank contains a propellant acquisition and retention assembly in the aft end. The propellant acquisition and retention assembly consists of an intermediate bulkhead with communication screen and an acquisition system. The propellant in the tank is directed from the forward compartment through the intermediate bulkhead through the communication screen into the aft compartment during OMS burns. The communication screen retains propellant in the aft compartment during zero-gravity conditions.

The acquisition assembly consists of four stub galleries and a collector manifold. The stub galleries acquire wall-bound propellant at OMS start and during RCS burns to prevent gas ingestion. The stub galleries have screens that allow propellant flow and prevent gas ingestion. The collector manifold is connected to the stub galleries and also contains a gas arrestor screen to further prevent gas ingestion, which permits OMS engine ignition without the need of a propellant-settling maneuver employing RCS engines. The propellant tank's nominal operating pressure is 250 psi, with a maximum operating pressure limit of 313 psia.

Each propellant tank has one pressure sensor wired directly to the RCS/OMS/PRESS meters on panel O3. Selecting the *OMS PRPLT* position of the rotary switch below the bank of meters enables the crew to read fuel and oxidizer pressures. The same measurement is also displayed on the GNC SYS SUMM 2 display (TK P OXID, FU entries). If the tank pressure is lower than 232 psia or higher than 284 psia, the *LEFT* or *RIGHT OMS* red caution and warning light on panel F7 will be illuminated.

OMS Quantity Gauging

A capacitance gauging system in each OMS propellant tank measures the propellant in the tank. The system consists of a forward and aft probe and a totalizer. The forward and aft fuel probes use fuel (a conductor) as one plate of the capacitor and a glass tube that is metallized on the inside as the other. The forward and aft oxidizer probes use two concentric nickel tubes as the capacitor plates and oxidizer as the dielectric. (Helium is also a dielectric, but has a different dielectric constant than the oxidizer.) The aft probes in each tank contain a

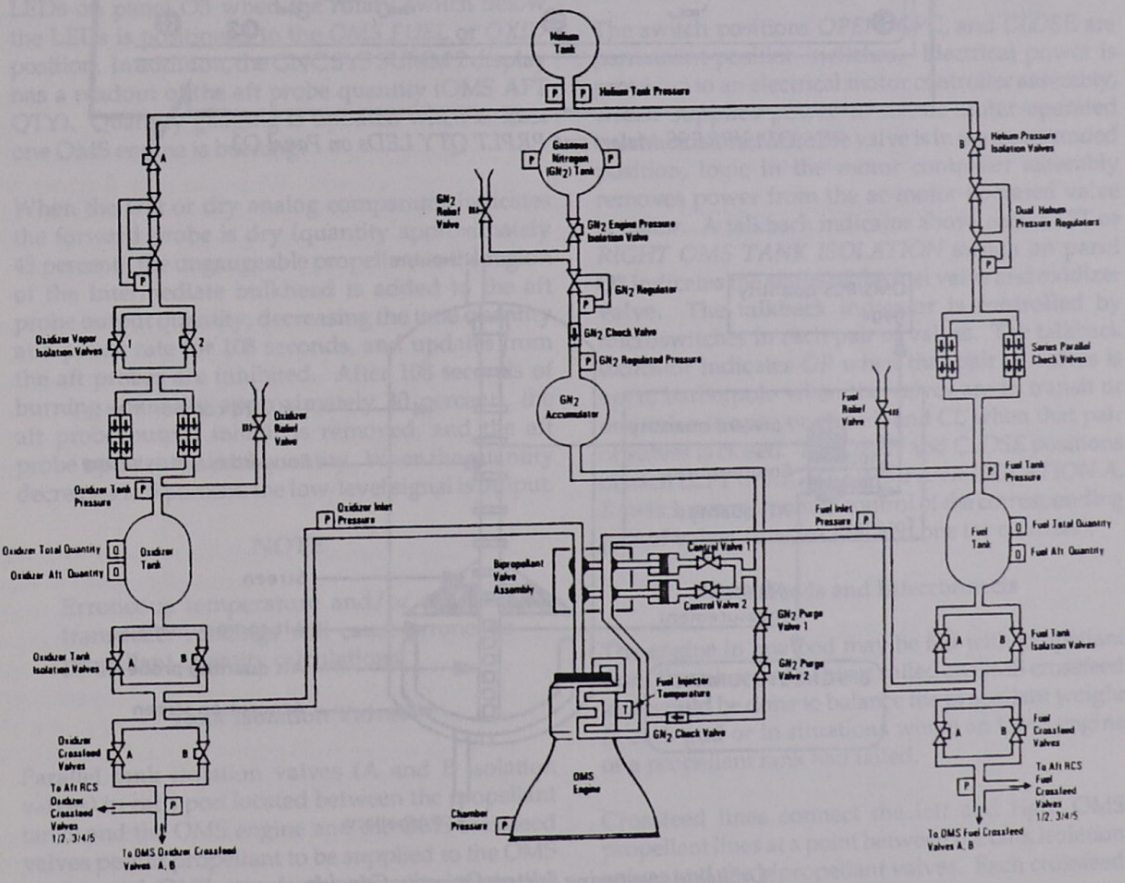

Orbital Maneuvering System Pressurization and Propellant Feed System for One Engine (Other Engine Identical)

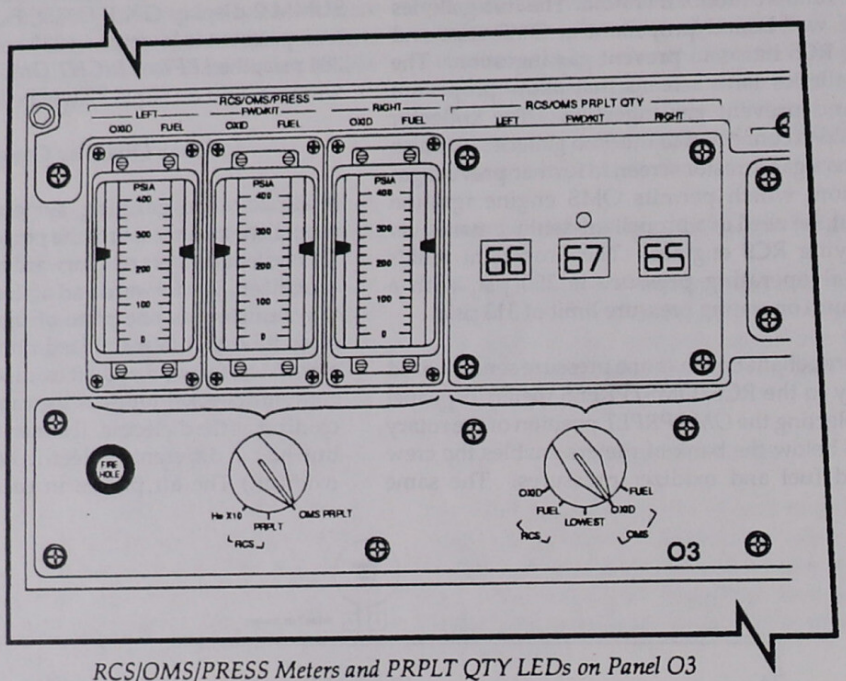

RCS/OMS/PRESS Meters and PRPLT QTY LEDs on Panel O3

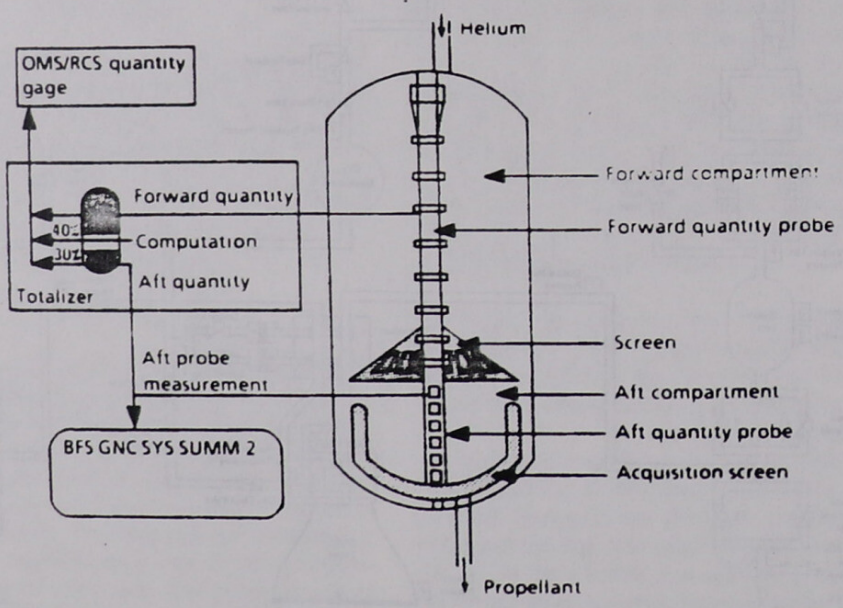

Orbital Maneuvering System Quantity Gauging

resistive temperature-sensing element to correct variations in fluid density. The fluid in the area of the communication screens cannot be measured.

The totalizer receives OMS valve operation information and inputs from the forward and aft probes in each tank and outputs total and aft quantities and a low level quantity. The inputs from the OMS valves allow control logic in the totalizer to determine when an OMS engine is burning and which tanks are being used. The totalizer begins an engine flow rate/time integration process at the start of the OMS burn, which reduces the indicated amount of propellants by a preset estimated rate for the first 14.8 seconds. After 14.8 seconds of OMS burn, which settles the propellant surface, the probe capacitance gauging system outputs are enabled, which permits the quantity of propellant remaining to be displayed. The totalizer outputs are displayed on the RCS/OMS PRPLT QTY LEDs on panel O3 when the rotary switch below the LEDs is positioned to the *OMS FUEL* or *OXID* position. In addition, the GNC SYS SUMM 2 display has a readout of the aft probe quantity (OMS AFT QTY). Quantity gauging is updated when at least one OMS engine is burning.

When the wet or dry analog comparator indicates the forward probe is dry (quantity approximately 45 percent), the ungaugeable propellant in the region of the intermediate bulkhead is added to the aft probe output quantity, decreasing the total quantity at a preset rate for 108 seconds, and updates from the aft probes are inhibited. After 108 seconds of burning (quantity approximately 30 percent), the aft probe output inhibit is removed, and the aft probe updates the total quantity. When the quantity decreases to 5 percent, the low-level signal is output.

NOTE

Erroneous temperature and/or pressure transducer readings will cause erroneous propellant quantity calculations.

Tank Isolation Valves

Parallel tank isolation valves (A and B isolation valves) in each pod located between the propellant tanks and the OMS engine and the OMS crossfeed valves permit propellant to be supplied to the OMS engine and OMS crossfeed valves or isolate the propellant. The valves are driven open and closed by ac motors that normally use 3-phase ac power but can operate on 2-phase power.

The *LEFT* and *RIGHT OMS TANK ISOLATION A* switches on panel O8 control the A fuel and A oxidizer valve in that pod, and the *B* switches control the B fuel and B oxidizer valve in that pod. The switches have manual *OPEN* and *CLOSE* positions and a *GPC* position that enables automatic control of the valves. When the *LEFT* or *RIGHT OMS TANK ISOLATION* switches in a pod are positioned to *GPC*, pairs of valves are automatically opened or closed upon command from the orbiter computer. When a pair of valves is opened, fuel and oxidizer from the corresponding propellant tanks are allowed to flow to that OMS engine and OMS crossfeed valves. When that pair of valves is closed, fuel and oxidizer are isolated from the OMS engine and OMS crossfeed valves.

The switch positions *OPEN*, *GPC*, and *CLOSE* are permanent-position switches. Electrical power is provided to an electrical motor controller assembly, which supplies power to the ac-motor-operated valve actuators. Once the valve is in the commanded position, logic in the motor controller assembly removes power from the ac-motor-operated valve actuator. A talkback indicator above each *LEFT* or *RIGHT OMS TANK ISOLATION* switch on panel O8 indicates the status of the fuel valve and oxidizer valve. The talkback indicator is controlled by microswitches in each pair of valves. The talkback indicator indicates *OP* when that pair of valves is open, barberpole when the valves are in transit or one valve is open or closed, and *CL* when that pair of valves is closed. The *OPEN* and *CLOSE* positions of each *LEFT* or *RIGHT OMS TANK ISOLATION A, B* switch permit manual control of the corresponding pair of valves (one for fuel and one for oxidizer).

Crossfeeds and Interconnects

The engine in one pod may be fed with propellant from the other pod. This is called an OMS crossfeed and would be done to balance the propellant weight in each pod or in situations where an OMS engine or a propellant tank had failed.

Crossfeed lines connect the left and right OMS propellant lines at a point between the tank isolation valves and the bipropellant valves. Each crossfeed

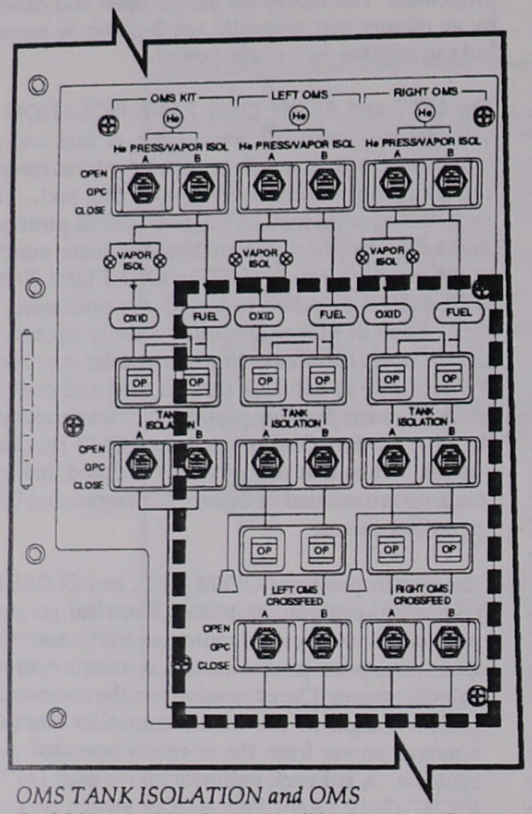

OMS TANK ISOLATION and OMS CROSSFEED Switches and Talkbacks on Panel O8

line has two crossfeed valves arranged in parallel to provide redundant paths for propellant flow. The *LEFT* and *RIGHT OMS CROSSFEED* switches are on panel O8, and each controls a valve in the fuel and oxidizer crossfeed lines.

When a crossfeed is set up, the tank isolation valves on the receiving side are closed. (The OMS propellant tanks on each side should not be directly connected in most cases.) The OMS crossfeed valves are then opened for the feeding and receiving side to establish a flow path from the OMS propellant tanks on one side to the engine on the other side.

OMS propellant can also be fed to the aft RCS jets using OMS propellant from either OMS pod in orbit. This is called an OMS-to-RCS interconnect, and it provides the capability to operate the aft RCS using OMS propellant for orbital maneuvers. The RCS has its own crossfeed valves, similar to the OMS crossfeed valves, that are used to connect the RCS propellant lines to the crossfeed lines. The same crossfeed lines are used for OMS crossfeeds, RCS crossfeeds, and OMS-to-RCS interconnects.

When an OMS-to-RCS interconnect is set up, the RCS tank isolation valves are closed with *AFT LEFT RCS* and *AFT RIGHT RCS TANK ISOLATION* switches on panel O7. The OMS crossfeed valves on the feeding side are opened, and then the RCS crossfeed valves are opened. The OMS crossfeed valves on the non-feeding side are kept closed. This sequence prevents a direct connection between the OMS and RCS tanks. Normally, an interconnect involves one OMS pod feeding the RCS on both sides. This type of interconnect is used during orbit operations and is set up manually. The most important use of an OMS-to-RCS interconnect would be during an ascent abort, when the interconnect setup is automatic.

In each pod, parallel left or right OMS crossfeed valves are controlled by the *LEFT* and *RIGHT OMS CROSSFEED A, B* switches on panel O8. The *A* switch controls the A fuel and A oxidizer ac-motor-operated valve actuators in the pod selected, and the *B* switch controls the B fuel and B oxidizer valve in the pod selected. When the *A* or *B* switch in a pod is positioned to *GPC*, the A or B pair of fuel and oxidizer valves is automatically opened or closed upon command from the orbiter computer.

For example, when the A or B pair of crossfeed valves in the left pod is opened, fuel and oxidizer from the left pod are routed to the OMS crossfeed valves of the right pod; thus, a pair of A or B crossfeed valves in the right pod must be opened to permit the left pod fuel and oxidizer to be directed to the right OMS pod engine.

A talkback indicator above the crossfeed switches on panel O8 indicates the status of the selected pair's fuel and oxidizer valves. The talkback indicator indicates *OP* when both valves are open, barberpole when the valves are in transit or one valve is open and one closed, and *CL* when both valves are closed. The *LEFT* and *RIGHT OMS CROSSFEED A* and *B* switches on panel O8 permit manual control of the corresponding pair of fuel and oxidizer valves.

The *LEFT* and *RIGHT OMS CROSSFEED A* and *B* switches also provide the capability to supply OMS propellants to the left and right aft RCS engines.

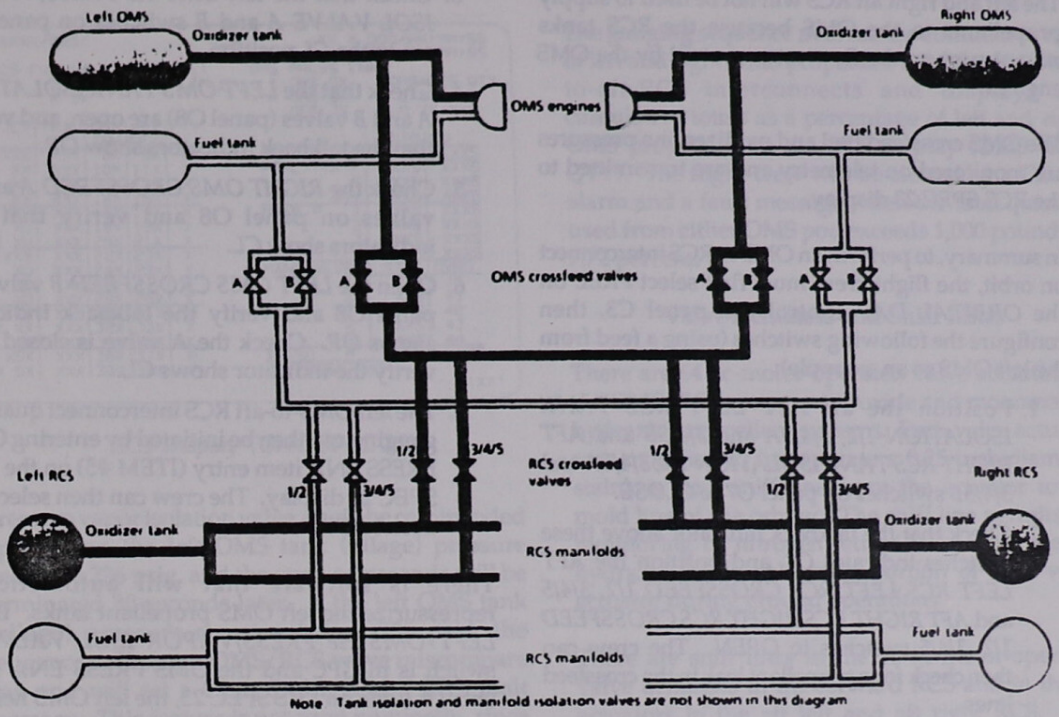

Orbital Maneuvering System and Reaction Control System Crossfeed Valves (OMS and RCS Tank Isolation Valves Not Shown)

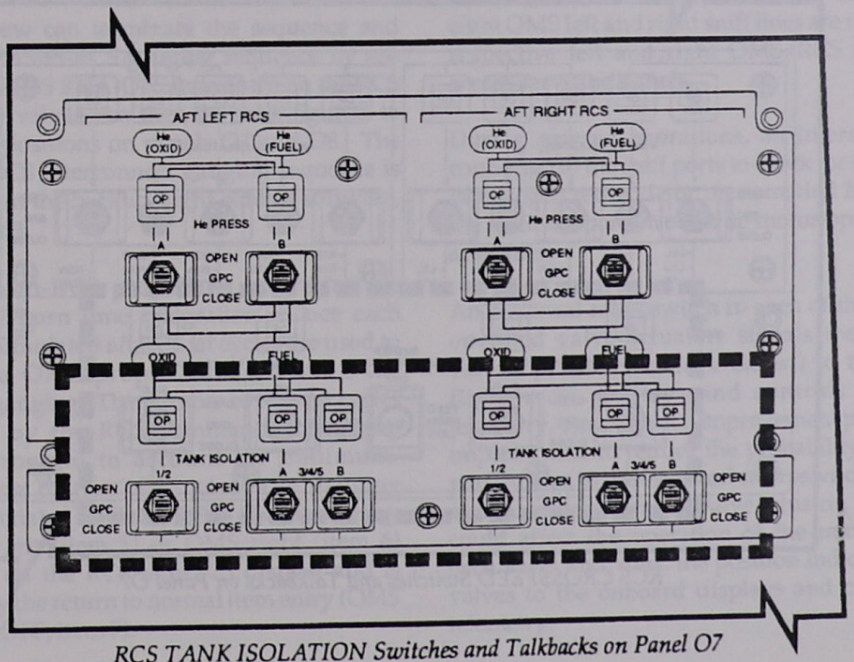

RCS TANK ISOLATION Switches and Talkbacks on Panel O7

The left and right aft RCS will not be used to supply propellants to the OMS because the RCS tanks cannot support the flow rate required by the OMS engines.

The OMS crossfeed fuel and oxidizer line pressures are monitored on telemetry and are transmitted to the RCS SPEC 23 display.

In summary, to perform an OMS to RCS interconnect on orbit, the flight crew must first select *FREE* on the *ORBITAL DAP* controls on panel C3, then configure the following switches (using a feed from the left OMS as an example):

1. Position the aft *AFT LEFT RCS TANK ISOLATION 1/2, 3/4/5A* and *3/4/5B* and *AFT RIGHT RCS TANK ISOLATION 1/2, 3/4/5A* and *3/4/5B* switches on panel O7 to *CLOSE*.
2. Check that the talkback indicator above these switches indicates *CL*, and position the *AFT LEFT RCS LEFT RCS CROSSFEED 1/2, 3/4/5* and *AFT RIGHT RCS RIGHT RCS CROSSFEED 1/2, 3/4/5* switches to *OPEN*. The crew can then check for a propellant leak in the crossfeed lines.
3. Check that the left *OMS He PRESS/VAPOR ISOL VALVE A* and *B* switches on panel O8 are in the *CL* position.
4. Check that the *LEFT OMS TANK ISOLATION A* and *B* valves (panel O8) are open, and verify that the talkback indicators show *OP*.
5. Check the *RIGHT OMS CROSSFEED A* and *B* valves on panel O8 and verify that the indicators show *CL*.
6. Open the *LEFT OMS CROSSFEED B* valve on panel O8 and verify the talkback indicator shows *OP*. Check the A valve is closed and verify the indicator shows CL.
7. The left OMS-to-aft RCS interconnect quantity gauging can then be initiated by entering OMS PRESS ENA item entry (ITEM #5) on the RCS SPEC 23 display. The crew can then select the desired DAP.

There is software that will automatically repressurize the left OMS propellant tanks. If the *LEFT OMS He PRESS/VAPOR ISOL VALVE A* switch is in *GPC* and the OMS PRESS ENA item entry is done on RCS SPEC 23, the left OMS helium

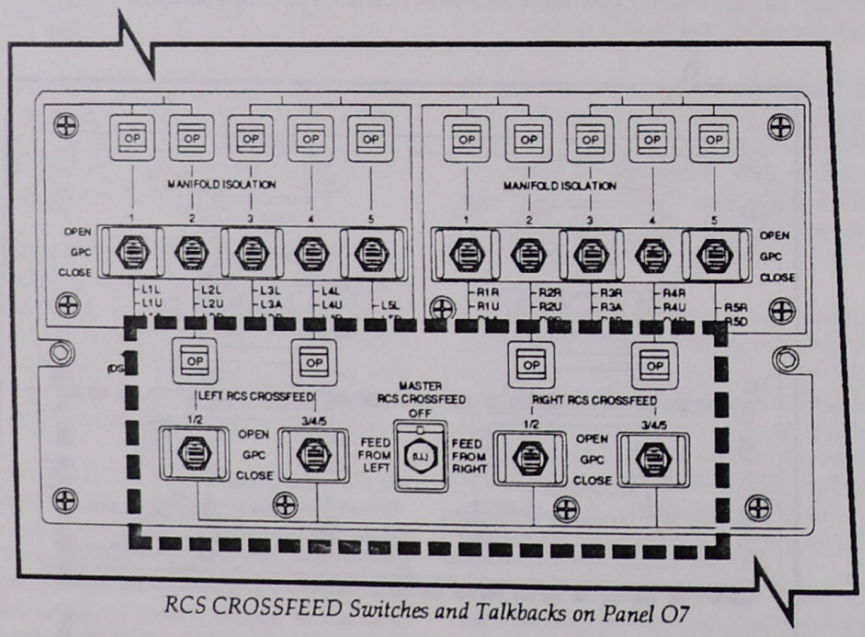

RCS CROSSFEED Switches and Talkbacks on Panel O7

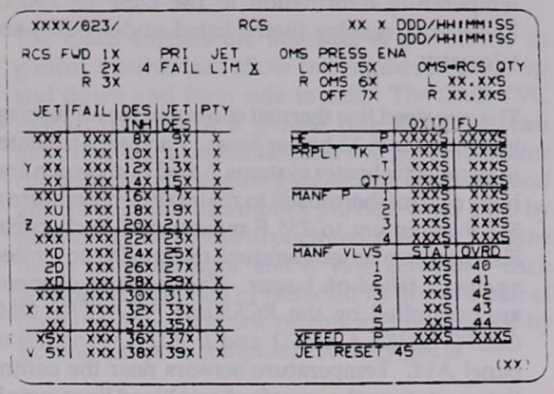

RCS Display (GNC SPEC 23)

pressure vapor isolation valve A will be commanded open when the left OMS tank (ullage) pressure decays to 236 psig, and the open commands will be terminated 30 seconds later. If the left OMS tank (ullage) pressure remains below 236 psia, the sequence will set an OMS/RCS valve miscompare flag and will set a Class 3 alert and a CRT fault message. This feature is not used nominally, since it would feed any OMS or RCS leaks. The sequence also will enable the OMS-to-RCS gauging sequence at the same time. This feature is used nominally.

The flight crew can terminate the sequence and inhibit the OMS-to-RCS gauging sequence by use of the OMS PRESS ENA-OFF item entry on the RCS display. The valves can then be reconfigured to their normal positions on panels O7 and O8. The OMS-to-aft-RCS interconnect gauging sequence is not available in the backup flight control software, or in OPS 1 or 3.

The OMS-to-aft-RCS propellant quantities are calculated by burn time integration. Once each cycle, the accumulated aft RCS jet cycles are used to compute the OMS propellant used since the initiation of gauging. The number of RCS jet cycles is provided by the RCS command subsystem operating program to account for minimum-impulse firing of the RCS jets. The gauging sequence is initiated by OMS PRESS ENA item entry of the OMS left (item 5) or OMS right (item 6) interconnect on the RCS SPEC 23 display and is terminated by the return to normal item entry (OMS PRESS ENA-OFF, item 7).

The gauging sequence maintains a cumulative total of left and right OMS propellant used during OMS-to-aft-RCS interconnects and displays the cumulative totals as a percentage of left and right OMS propellant on the RCS display (OMS→RCS QTY). The flight crew will be alerted by a Class 3 alarm and a fault message when the total quantity used from either OMS pod exceeds 1,000 pounds or 7.72 percent.

Valve Actuators and Sniff Lines

There are 64 ac-motor-operated valve actuators in the OMS/RCS nitrogen tetroxide and monomethyl hydrazine propellant systems. Each valve actuator was modified to incorporate a 0.25-inch-diameter stainless steel sniff line from the actuator to the mold line of the orbiter. The sniff line permits the monitoring of nitrogen tetroxide or monomethyl hydrazine in the electrical portion of each valve actuator during ground operations.

There are sniff lines in the 12 ac-motor-operated valve actuators in the forward RCS and in the 44 actuators in the aft left and aft right RCS. The remaining 0.25-inch-diameter sniff lines are in the eight OMS tank isolation and crossfeed ac-motor-operated valve actuators in the left and right OMS. The 44 aft left and right RCS sniff lines and the eight OMS left and right sniff lines are routed to the respective left and right OMS/RCS pod Y web access servicing panels.

During ground operations, an interscan can be connected to the sniff ports to check for the presence of nitrogen tetroxide or monomethyl hydrazine in the electrical portion of the ac-motor-operated valve actuators.

An electrical microswitch in each of the ac-motor-operated valve actuators signals the respective valves' position (open or closed) to the onboard flight crew displays and controls as well as telemetry. An extensive improvement program was implemented to reduce the probability of floating particulates in the electrical microswitch portion of each ac-motor-operated valve actuator. Particulates could affect the operation of the microswitch in each valve and, thus, the position indication of the valves to the onboard displays and controls and telemetry.

Thermal Control

OMS thermal control is achieved by the use of strip heaters and insulation on the interior surface of the pods that enclose the OMS hardware components. Wraparound heaters and insulation condition the crossfeed lines. The heaters prevent propellant from freezing in the tank and lines. The OMS heaters are divided into three segments: left pod, right pod, and crossfeed lines.

Each OMS/RCS pod is divided into eight heater areas. Each of the heater areas in the pods contains an A and B element, and each element has a thermostat that controls the temperature from 55° to 75° F. These heater elements are controlled by the *RCS/OMS HEATERS LEFT POD* and *RIGHT POD A AUTO* and *B AUTO* switches on panel A14.

Sensors located throughout the pods supply temperature information to the DISP 89 PRPLT THERMAL display (items listed under POD) and telemetry.

The crossfeed line thermal control in the aft fuselage is divided into 11 heater areas. Each area is heated in parallel by heater systems A and B, and each area has a control thermostat to maintain temperature at 55° F minimum to 75° F maximum. Each circuit also has an overtemperature thermostat to protect against a failed-on heater. These heater elements are controlled by the *RCS/OMS HEATERS OMS CRSFD LINES A AUTO* and *B AUTO* switches on panel A14. Temperature sensors near the control thermostats on the crossfeed and bleed lines supply temperature information on the DISP 89 PRPLT THERMAL display (OMS CRSFD items) and telemetry.

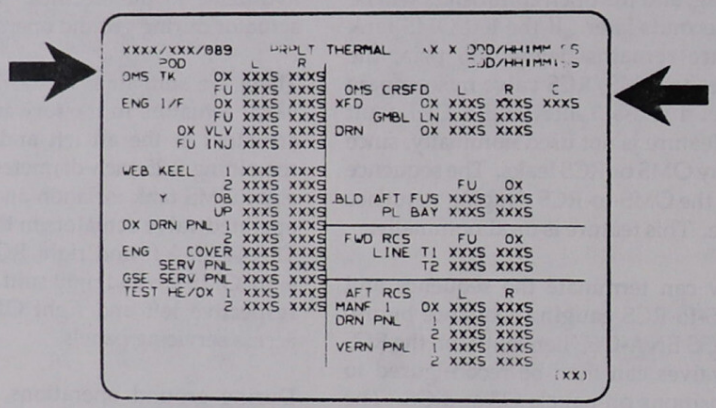

SM DISP 89 PRPLT THERMAL Display

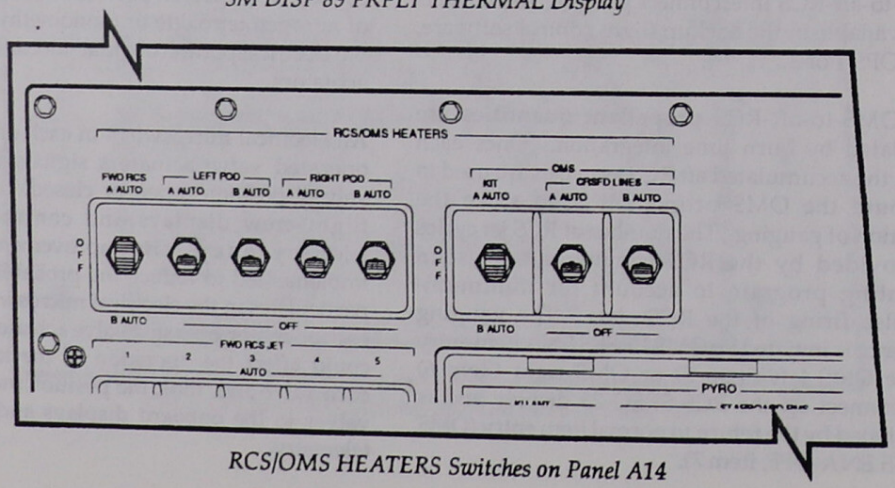

RCS/OMS HEATERS Switches on Panel A14

Thrust Vector Control (TVC)

The OMS engines are attached to the orbiter in gimbal mounts that allow the engines to pivot up and down and from side to side. The OMS TVC system consists of a gimbal ring assembly, two gimbal actuator assemblies, and two gimbal actuator controllers. The engine gimbal ring assembly and gimbal actuator assemblies provide OMS TVC by gimbaling the engines in pitch and yaw. Each engine has a pitch actuator and a yaw actuator. Each actuator is extended or retracted by one of a pair of dual-redundant electric motors and is actuated by general-purpose computer control signals.

The gimbal ring assembly contains two mounting pads to attach the engine to the gimbal ring and two pads to attach the gimbal ring to the orbiter. The ring transmits engine thrust to the pod and orbiter.

The pitch and yaw gimbal actuator assembly for each OMS engine provides the force to gimbal the engines. Each actuator contains a primary and secondary motor and drive gears. The primary and secondary drive systems are isolated and are not operated concurrently. Each actuator consists of two redundant brushless dc motors and gear trains, a single jackscrew and nut-tube assembly, and redundant linear position feedback transducers. A GPC position command signal from the primary electronic controller energizes the primary dc motor, which is coupled with a reduction gear and a no-back device.

The output from the primary power train drives the jackscrew of the drive assembly, causing the nut-tube to translate (with the secondary power train at idle), which causes angular engine movement. If the primary power train is inoperative, a GPC position command from the secondary electronic controller energizes the secondary dc motor, providing linear travel by applying torque to the nut-tube through the spline that extends along the nut-tube for the stroke length of the unit. Rotation of the nut-tube about the stationary jackscrew causes the nut-tube to move along the screw. A no-back device in each drive system prevents backdriving of the standby system.

The electrical interface, power, and electronic control elements for active and standby control channels are assembled in separate enclosures designated the active actuator controller and standby actuator controller. These are mounted on the OMS/RCS pod structure. The active and standby actuator controllers are electrically and mechanically interchangeable.

The gimbal assembly provides control angles of plus or minus 6 degrees in pitch, and plus or minus 7 degrees in yaw with clearance provided for an additional 1 degree for snubbing and tolerances. The engine null position is with the engine nozzles up 15 degrees 49 seconds (as projected in the orbiter XZ plane) and outboard 6 degrees 30 seconds (measured in the 15-degree 49-second plane).

The thrust vector control command subsystem operating program (SOP) processes and outputs pitch and yaw OMS engine actuator commands and the actuator power selection discretes. The OMS TVC command SOP is active during the following operational sequences: orbit insertion (OMS-1 and OMS-2), orbit coast, deorbit, deorbit coast, and return-to-launch-site abort (major modes 104, 105, 201, 301, 302, 303, and 601).

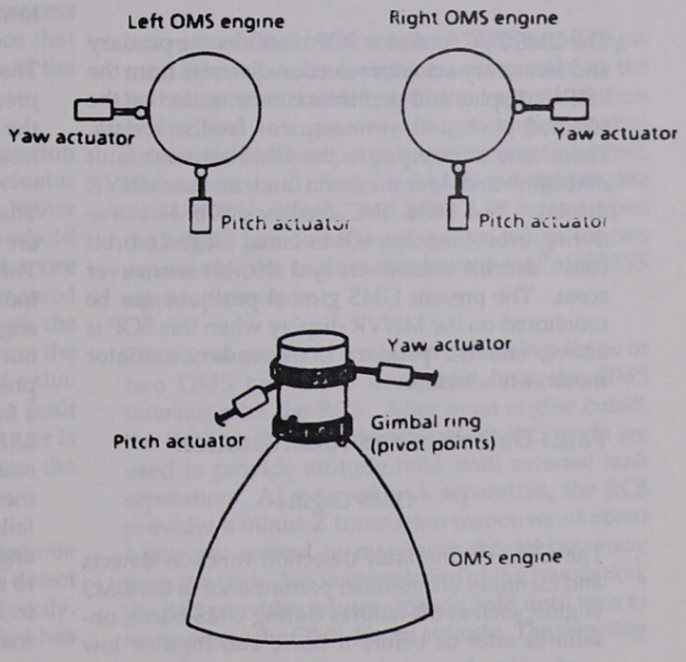

Orbital Maneuvering System Gimbal Actuators

The flight crew can select either the primary or secondary motors of the pitch and yaw actuators by item entry (PRI 28,29 and SEC 30,31 on the MNVR display), or they can turn the actuator motors off. The actuator command outputs are selected by the TVC command SOP, depending on the flag that is present; i.e., major modes, deorbit maneuver, orbit coast, RTLS abort, center-of-gravity trim, and gimbal check. The deorbit maneuver coast flag causes the TVC command SOP to output I-loaded values to command the engines to the entry stowed position.

The presence of the RTLS abort and center-of-gravity trim flags causes the engines to be commanded to a predefined position with the thrust vector through the center of gravity. The major mode RTLS flag by itself will cause the engines to be commanded to a stowed position for return-to-launch-site entry.

The gimbal check flag causes the engines to be commanded to plus 7 degrees yaw and 6 degrees pitch, then to minus 7 degrees yaw and 6 degrees pitch, and back to zero degrees yaw and pitch. In the absence of these flags, the TVC command SOP will output the digital autopilot gimbal actuator commands to the engine actuators. The backup flight control system allows only manual TVC during a burn, but it is otherwise similar.

The OMS TVC feedback SOP monitors the primary and secondary actuator selection discretes from the MNVR display and performs compensation on the selected pitch and yaw actuator feedback data. These data are output to the OMS actuator fault detection and identification and to the MNVR display. The OMS TVC feedback SOP is active during orbit insertion (OMS-1 and OMS-2), orbit coast, deorbit maneuver, and deorbit maneuver coast. The present OMS gimbal positions can be monitored on the MNVR display when this SOP is active, and the primary or secondary actuator motors are selected.

Fault Detection and Identification

OMS Engine

The OMS engine fault detection function detects and identifies off-nominal performance of the OMS engine, such as off-failures during OMS burns, on-failures after or before a burn, and high or low engine chamber pressures.

Redundancy management software performs OMS engine fault detection and identification. It is assumed that the flight crew arms only the OMS engine to be used; the OMS engine not armed cannot be used for burns. Fault detection is initialized at solid rocket booster ignition and terminated after the OMS-1 burn or, in the case of an RTLS abort, at the transition from RTLS entry to the RTLS landing sequence program. Fault detection also is initiated before each OMS burn and terminated after the OMS burn is complete.

The PASS OMS engine fault detection uses both a velocity comparison and a chamber pressure comparison method to determine a failed-on or failed-off engine. The velocity comparison is used only after MECO since the OMS thrust is small compared to MPS thrust before MECO. The BFS OMS engine fault detection uses only a chamber pressure comparison method.

The measured velocity increment is compared to a predetermined one-engine and two-engine acceleration threshold value by the redundancy management software to determine the number of engines actually firing. This information, along with the assumption that an armed engine is to be used, allows the software to determine if the engine has low thrust or has shut down prematurely.

The chamber pressure comparison test compares a predetermined threshold chamber pressure level to the measured chamber pressure to determine a failed engine (on, off, or low thrust).

The engine-on command and the chamber pressure are used before MECO to determine a failed engine. The velocity indication and the chamber pressure indication are used after MECO to determine a failed engine. If the engine fails the chamber pressure test but passes the velocity test after MECO, the chamber pressure transducer will be considered failed. Such a failure would illuminate the red *RIGHT OMS* or *LEFT OMS* caution and warning light on panel F7, sound the master alarm, and produce a fault message, but the engine is still burning. If an engine fails the chamber pressure and velocity tests, the engine is considered failed, and a down arrow next to the failed engine appears on the MNVR display, in addition to illumination of the light on F7 and master alarm.

When the flight crew disarms a failed engine by turning the appropriate *ARM/PRESS* switch on panel C3 to *OFF*, a signal is sent to the OMS burn sequence to shut down the engine and to signal guidance to reconfigure. Guidance reconfigures and downmodes from two OMS engines, to one OMS engine, to four plus X RCS jets.

OMS Gimbal Fault Detection

The OMS gimbal actuator fault detection indicator detects and identifies off-nominal performance of the pitch and yaw gimbal actuators of the OMS engines.

The OMS gimbal actuator fault detection is divided into two processes. The first determines if the actuators should move from their present position. If the actuators must move, the second part determines how much they should move and whether the desired movement has occurred.

The first part checks the actuators' gimbal deflection error (the difference between the commanded new position and the actuators' last known position) and determines whether the actuators should extend or retract or if they are being driven against a stop. If the actuators are in the desired position or being driven against a stop, the first part of the process will be repeated. If the first part determines that the actuator should move, the second part of the process is performed.

The second part of the actuator fault detection process checks the present position of each actuator against its last known position to determine whether the actuators have moved more than a threshold amount. If the actuators have not moved more than this amount, an actuator failure is incremented by one. Each time an actuator fails this test, the failure is again incremented by one. When the actuator failure counter reaches an I-loaded value of four, the actuator is declared failed, and a fault message is output. The actuator failure counter is reset to zero any time the actuator passes the threshold test.

The first and second parts of the process continue to perform in this manner. The process can detect full-off gimbal failures and full-on failures indirectly. The full-on failure determines that the gimbal has extended or retracted too far and commands reverse motion. If no motion occurs, the actuator will be declared failed. The flight crew's response to a failed actuator is to select the secondary actuator electronics by item entry on the MNVR display. Gimbal failure on the left or right OMS will illuminate the red *OMS TVC* caution and warning light on panel F7.

Operations

The OMS burn sequence commands the OMS engines on or off and commands the engine purge function. The flight crew can select, via item entry on the MNVR display, a one or two-engine burn.

The sequence determines which engines are selected and then provides the necessary computer commands to open the appropriate helium vapor isolation valves and the engine gaseous nitrogen solenoid control valves and sets an engine-on indicator. The sequence will monitor the OMS engine fail flags and, if one or both engines have failed, issue the appropriate OMS shutdown commands as soon as the crew has confirmed the failure by placing the *OMS ENG* switch on panel C3 in the *OFF* position. This will then terminate the appropriate engine's control valve commands.

In a normal OMS burn, when the OMS cutoff flag is true, the sequence terminates commands to the helium pressurization, helium vapor isolation valves, and two gaseous nitrogen engine control valves. If the engine purge sequence is not inhibited, the sequence will check for the left and right engine *ARM/PRESS* signals, and after 0.36 second open the engine gaseous nitrogen purge valves for two seconds for the engines that have the *ARM/PRESS* signals present.

The ascent profile of a mission determines if one or two OMS burns are used, and how the OMS interacts with the RCS. After main engine cutoff, the RCS jets in the forward and aft RCS pods are used to provide attitude hold until external tank separation. At external tank separation, the RCS provides a minus Z translation maneuver of about 4 feet per second to maneuver the orbiter away from the tank. Upon completion of the translation, the RCS provides orbiter attitude hold until time to maneuver to the OMS-1 burn attitude. The targeting

data for the OMS-1 burn are selected before launch; however, the target data in the GPCs can be modified by the flight crew via the CRT keyboard, if necessary, before the OMS burn.

During the first OMS burn, both OMS engines are used to raise the orbiter to a predetermined elliptical orbit. During the burn, vehicle attitude is maintained by gimbaling the OMS engines. The RCS will not normally come into operation during an OMS burn. If, during an OMS burn, the vehicle attitude rate or attitude deadbands are exceeded, RCS attitude control is required. If only one OMS engine is used during an OMS burn, RCS roll control is required.

Upon completion of the OMS-1 burn, the RCS is used to null any residual velocities, if required. The flight crew uses the translational hand controller to command the applicable RCS engines to null the residual velocities. The RCS then provides attitude hold until time to maneuver to the OMS-2 burn attitude.

The second OMS burn using both OMS engines occurs near the apogee of the orbit established by the OMS-1 burn and is used to circularize the predetermined orbit for that mission. The targeting data for the OMS-2 burn are selected before launch; however, the target data in the onboard GPCs can be modified by the flight crew via the CRT keyboard, if necessary, before the OMS burn.

Upon completion of the OMS-2 burn, the RCS is used to null any residual velocities, if required, in the same manner as after OMS-1. The RCS is then used to provide attitude hold and minor translation maneuvers as required for on-orbit operations. The flight crew can select primary or vernier RCS jets for attitude control on orbit. Normally, the vernier RCS jets are selected for on-orbit attitude hold.

If the ascent profile for a mission uses a single OMS burn, it is referred to as direct insertion. In a direct-insertion ascent profile, the OMS-1 burn after main engine cutoff is eliminated. The OMS-2 burn is then used to achieve orbit circularization. The direct-insertion ascent profile allows the main propulsion system to provide more energy for orbit insertion.

Additional OMS burns using one or both OMS engines are performed on orbit according to the mission's requirements to modify the orbit for rendezvous, payload deployment, or transfer to another orbit.

The two OMS engines are used to deorbit. Target data for the deorbit maneuver are computed by the ground and loaded in the onboard GPCs via uplink. These data are also voiced to the flight crew for verification of loaded values. After verification of the deorbit data, the flight crew initiates an OMS gimbal test on the CRT keyboard unit.

Before the deorbit burn, the flight crew maneuvers the spacecraft to the desired deorbit burn attitude manually using the rotational hand controller, or automatically with an item entry on the MNVR display. Upon completion of the OMS burn, the RCS is used to null any residual velocities, if required.

The aft RCS plus X jets can be used to complete any planned OMS burn in the event of an OMS engine failure. In this case, the OMS-to-aft-RCS interconnect would feed OMS propellants to the aft RCS.

OMS Caution and Warning Summary

- There are class 2 and class 3 alerts for the OMS.
- Class 2 alerts can occur in all OPS and generate a *MASTER ALARM* light and tone and a light on the caution and warning matrix on panel F7.
- A class 3 alert is generated by the primary GNC or SM software in OPS 2 and 8 or by the BFS software in other OPS. Class 3 alerts include an *SM ALERT* light and tone and a fault message.
- The red *LEFT OMS* and *RIGHT OMS* lights on panel F7 will illuminate under the following conditions:
  - Left or right OMS oxidizer tank pressure is less than 232 or greater than 288 psi
  - Left or right OMS fuel tank pressure is less than 232 or greater than 288 psi
  - Left or right OMS engine P_c is less than 80 percent when the engine should be on or greater than 80 percent when the engine should be off.
- The red *OMS TVC* light will illuminate when there is gimbal failure on the left or right OMS.
- An L (R) OMS GMBL fault message will be displayed when there is a 2-degree difference between command and feedback position for an OMS gimbal actuator.
- An L (R) OMS PC fault message will be displayed when OMS engine Pc is less than 80 percent.
- An L (R) OMS QTY fault message will be displayed when OMS propellant tank quantity is less than 5 percent.
- An L (R) OMS TK P fault message will be displayed when OMS oxidizer or fuel tank pressure is below 234 or above 288 psi; when OMS helium tank pressure is below 1,500 psi; OMS N_2 tank pressure is below 1,200 psi; or OMS N_2 regulator pressure is above 434 or below 299 psi.
- An L (R) OMS VLV fault message will be displayed when OMS helium pressure valve and vapor isolation valve positions do not agree.
- An L (R) OMS TEMP fault message will be displayed when OMS engine fuel injector temperature is above 260° F.
- A G23 OMS RCS QTY fault message will be displayed when more than 7.72 percent (1,000 lb) of left or right OMS propellant is used during an orbit interconnect.

O_2 PRESS	H_2 PRESS	FUEL CELL REAC (R)	FUEL CELL STACK TEMP	FUEL CELL PUMP
CABIN ATM (R)	O_2 HEATER TEMP	MAIN BUS UNDERVOLT (R)	AC VOLTAGE	AC OVERLOAD
FREON LOOP (R)	AV BAY/ CABIN AIR	IMU	FWD RCS (R)	RCS JET
H_2O LOOP	RGA/ACCEL	AIR DATA (R)	LEFT RCS (R)	RIGHT RCS (R)
———	LEFT RHC (R)	RIGHT/AFT RHC (R)	LEFT OMS (R)	RIGHT OMS (R)
PAYLOAD WARNING (R)	GPC	FCS SATURATION (R)	OMS KIT	OMS TVC (R)
PAYLOAD CAUTION	PRIMARY C/W	FCS CHANNEL	MPS (R)	———
BACKUP C/W ALARM (R)	APU TEMP	APU OVERSPEED	APU UNDERSPEED	HYD PRESS

OMS Caution and Warning Lights on Panel F7

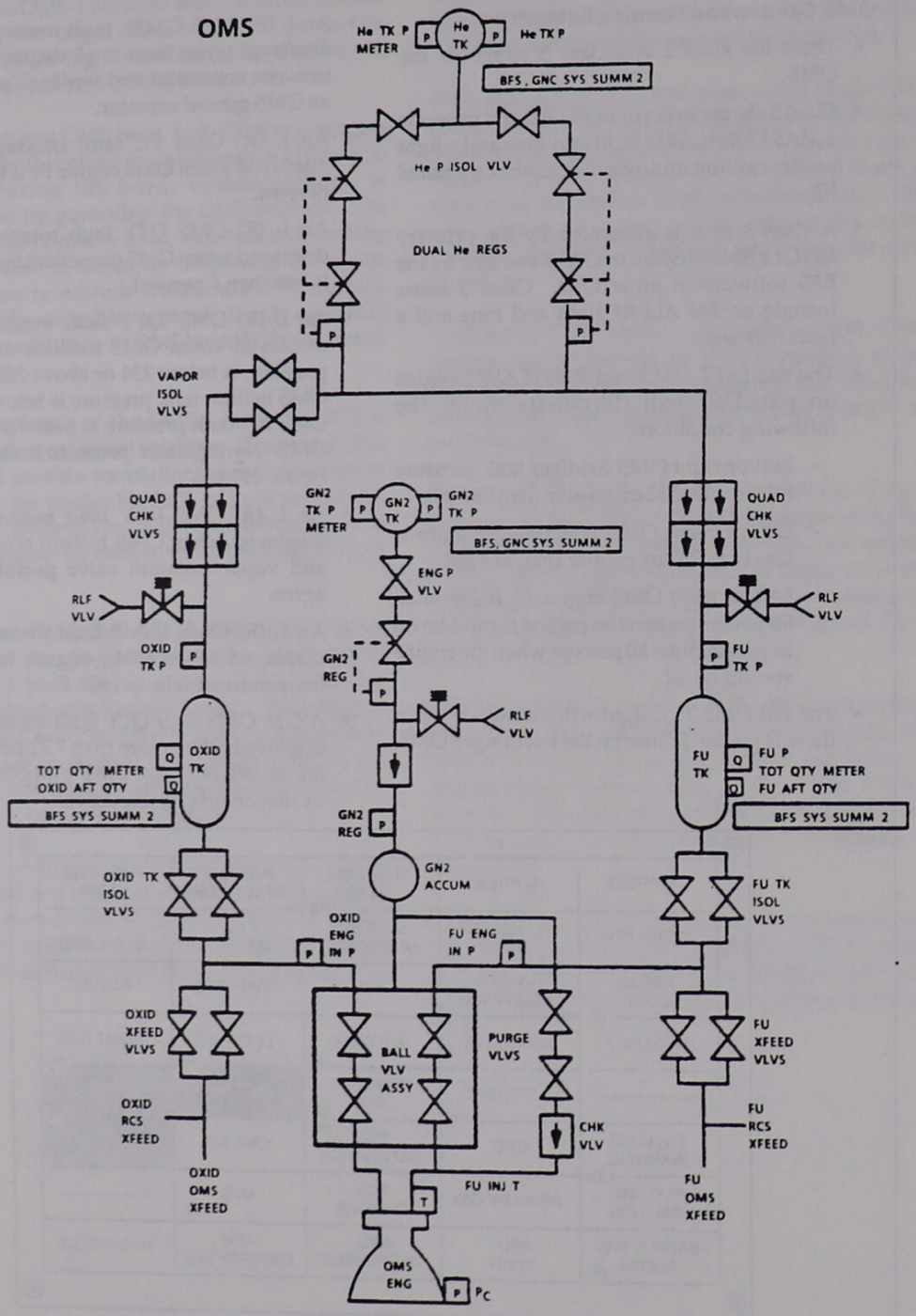

Orbital Maneuvering System

RCS/OMS/PRESS
LEFT
OXID
FUEL
FWD/AFT
OXID
FUEL
RIGHT
OXID
FUEL
PSIA
400
300
200
100
0
RCS/OMS PRPLT QTY
LEFT
FWD/AFT
RIGHT
66
67
65
MISSION TIME
DAY
HR
MIN
SEC
365:23:59:59
GMT
MET
TEST
FUEL
OXID
FUEL
OXID
LOWEST
RCS
OMS
O3

Panel O3

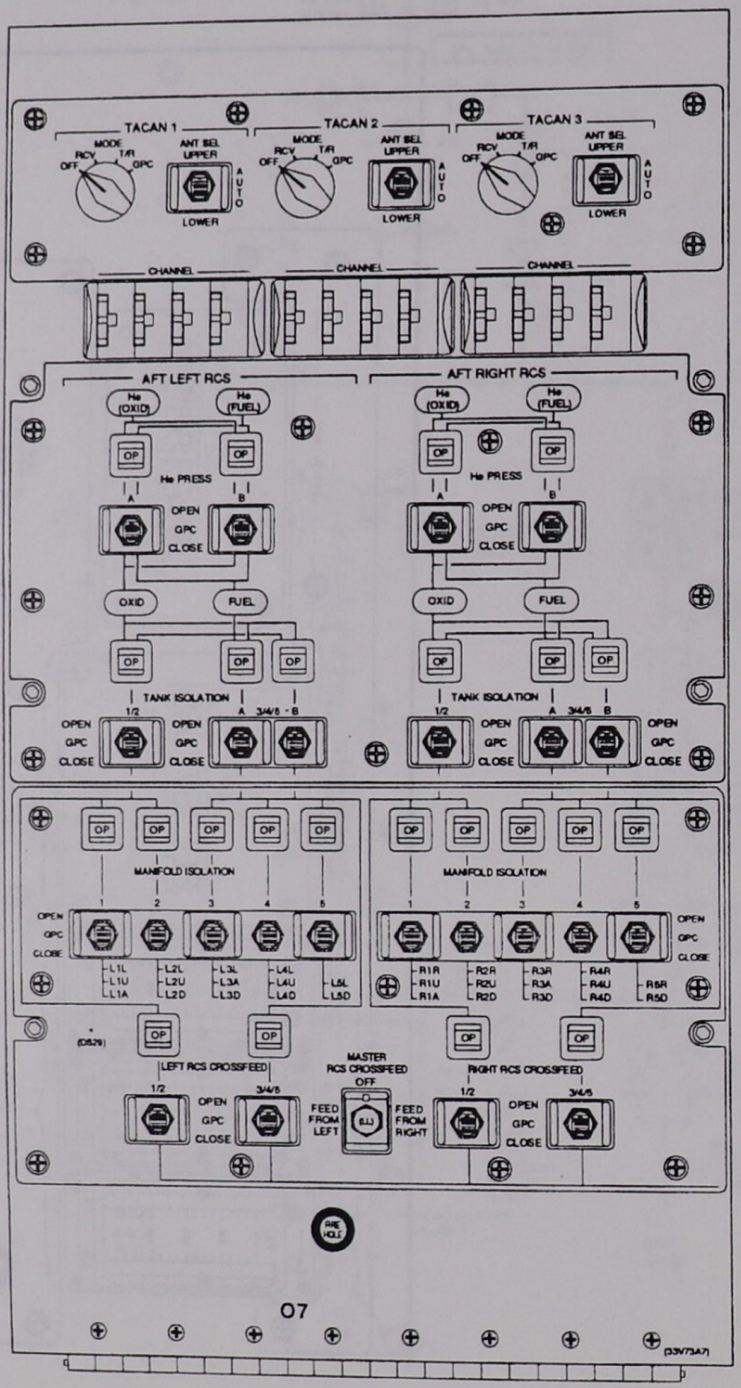
TACAN 1
TACAN 2
TACAN 3
MODE
RCV
T/R
OFF
GPC
ANT SEL
UPPER
LOWER
AUTO
CHANNEL
AFT LEFT RCS
AFT RIGHT RCS
He (OXID)
He (FUEL)
OP
He PRESS
A
B
OPEN
GPC
CLOSE
OXID
FUEL
TANK ISOLATION
1/2
3/4/5
MANIFOLD ISOLATION
1
2
3
4
5
L1L
L1U
L1A
L2L
L2U
L2D
L3L
L3A
L3D
L4L
L4U
L4D
L5L
L5D
R1R
R1U
R1A
R2R
R2U
R2D
R3R
R3A
R3D
R4R
R4U
R4D
R5R
R5D
LEFT RCS CROSSFEED
MASTER
RCS CROSSFEED
OFF
FEED
FROM
LEFT
FEED
FROM
RIGHT
RIGHT RCS CROSSFEED
O7

Panel O7

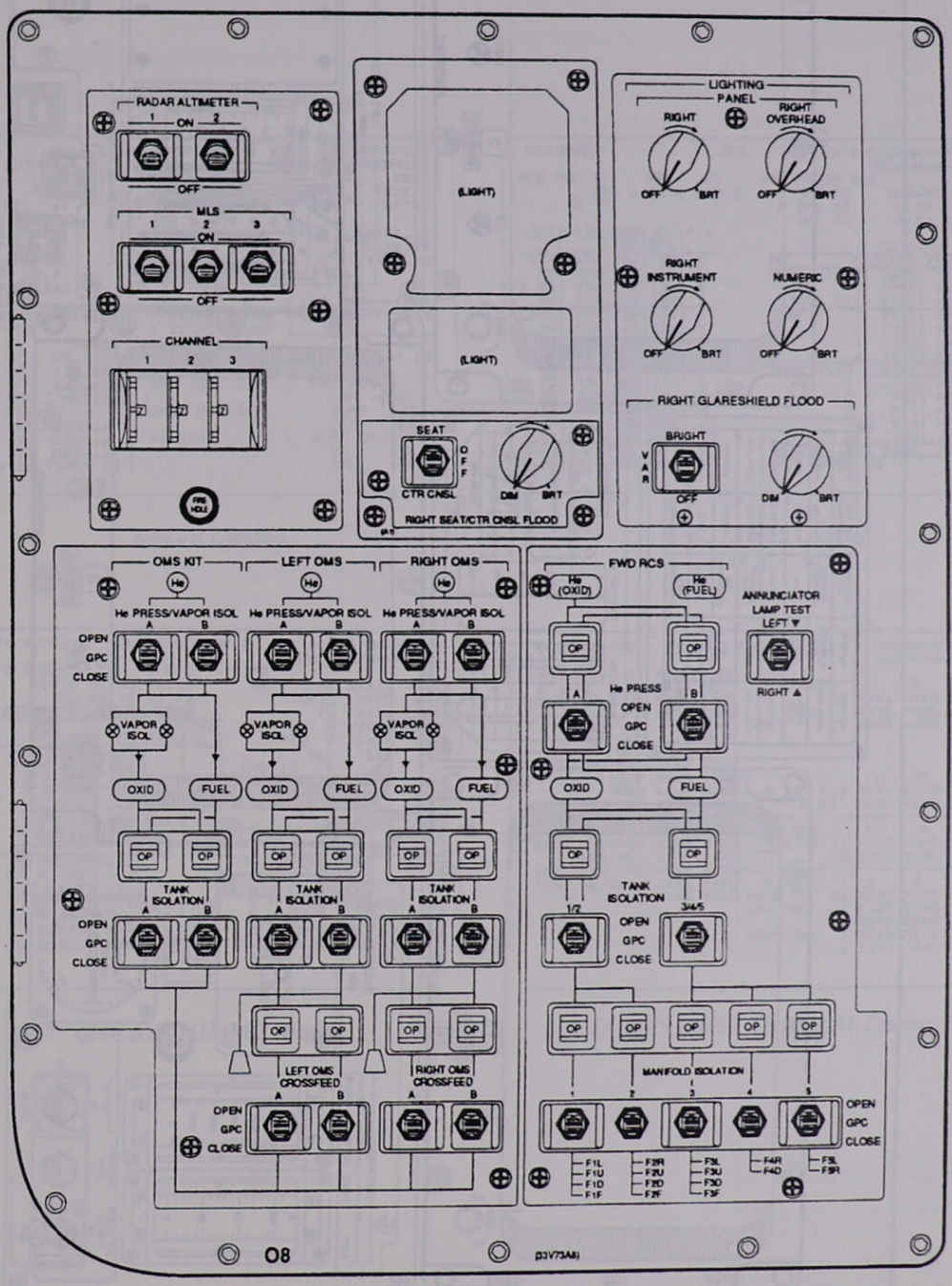
RADAR ALTIMETER
1 ON 2
OFF
MLS
1 2 3
ON
OFF
CHANNEL
1 2 3
(LIGHT)
(LIGHT)
SEAT
OFF
CTR CNSL
DIM BRT
RIGHT SEAT/CTR CNSL FLOOD
LIGHTING
PANEL
RIGHT
RIGHT OVERHEAD
OFF BRT
OFF BRT
RIGHT INSTRUMENT
NUMERIC
OFF BRT
OFF BRT
RIGHT GLARESHIELD FLOOD
BRIGHT
VAR
OFF
DIM BRT
OMS KIT
LEFT OMS
RIGHT OMS
He
He PRESS/VAPOR ISOL
A B
OPEN
GPC
CLOSE
VAPOR ISOL
OXID
FUEL
OP
TANK ISOLATION
LEFT OMS CROSSFEED
RIGHT OMS CROSSFEED
FWD RCS
He (OXID)
He (FUEL)
ANNUNCIATOR LAMP TEST
LEFT
RIGHT
He PRESS
TANK ISOLATION
1/2
3/4/5
MANIFOLD ISOLATION
1 2 3 4 5
F1L F1U F1D F1F
F2R F2U F2D F2F
F3L F3U F3D F3F
F4R F4D
F5L F5R
O8

Panel O8

CRT 1
CRT 2
BAT
DU
DEU
MNA-AB1
MNB-BC2
MNC-CA1
ELEVONS DEG
BODY FLAP %
RUDDER DEG
AILERON DEGREES
SPEEDBRAKE %
COMMAND
OFF
OMS PRESS
N2/He TANK
LEFT
RIGHT
EVENT TIME
MIN
SEC
59:59
PSIA
RM ALERT
ACCEL G UNITS
FLT CNTLR POWER ON
RADAR ALTM
MPS PRESS
ENG MANF
HELIUM
MAIN ENGINE STATUS
TANK
CTR
FUEL
REG

Panel F7

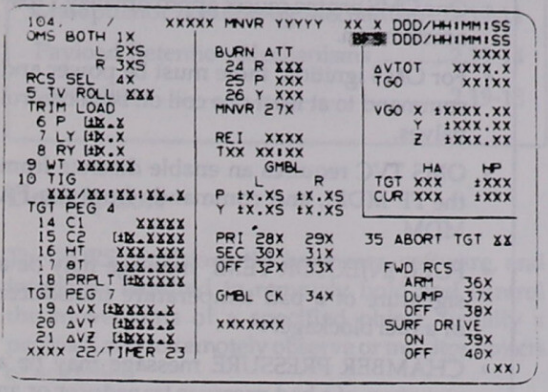

MNVR Display

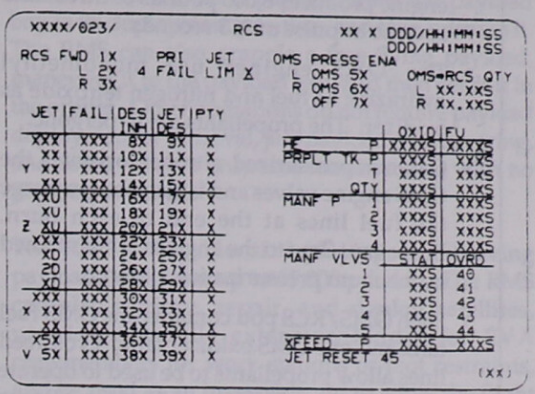

SPEC 23 RCS Display

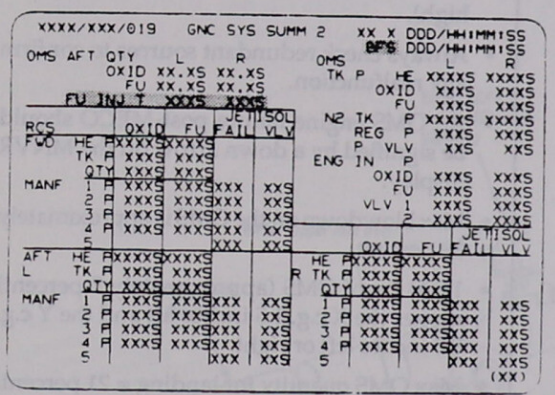

GNC SYS SUMM 2 Display

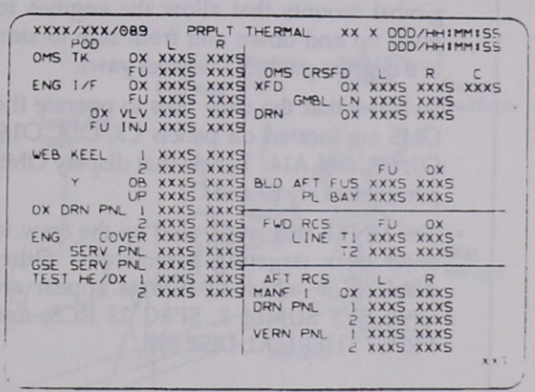

DISP 89 PRPLT THERMAL Display

OMS Summary Data

- The OMS provides propulsion for orbit insertion, orbit circularization, orbit transfer, rendezvous, and deorbit.
- The OMS engines are collocated with the aft RCS in two independent OMS/RCS pods on each side of the orbiter's aft fuselage. Each engine produces 6,000 pounds of thrust and specific impulse of 313 seconds.
- The OMS engines use monomethyl hydrazine as fuel and nitrogen tetroxide as oxidizer. The propellants are hypergolic.
- Gaseous pressurized nitrogen operates the OMS engine valves and is also used to purge the fuel lines at the end of each burn. Propellant flow to the engines is maintained by a helium pressurization system.
- Each OMS/RCS pod contains one OMS fuel tank and one OMS oxidizer tank. Crossfeed lines allow propellants to be used to operate either engine. OMS propellant can also be fed to aft RCS jets in orbit using OMS propellant from either pod.
- OMS engines are attached to the orbiter in gimbal mounts that allow the engines to pivot up and down and from side to side (± 6 degrees pitch, ± 7 degrees yaw).
- Switches that the crew uses to operate the OMS are located on panels C3, O14, O16, O7, O8, and A14. Panels that display OMS parameters are F7 and O3.
- The MNVR display is used by the crew to enter burn targeting parameters. Other displays on which OMS data appear are GNC SYS SUMM 2, SPEC 23 RCS, and PRPLT THERMAL DISP 89.

OMS Rules of Thumb

- 1 percent of OMS propellant
  = 6 fps ΔV
  3 n.m. Δ Hp
  130 lbs (80 lbs oxidizer, 50 lbs fuel)
  uses 40 psi of helium for long burns.
- One OMS engine causes approximately 1 fps^2 acceleration.
- For OMS ignition, there must be power and command to at least one coil on both control valves.
- OMS TVC requires an enable discrete from the FF MDM, and commands from the FA MDM.
- FUEL INJECTOR TEMP message may be a signature of a bad temperature transducer or a fuel blockage.
- CHAMBER PRESSURE message may be a signature of a bad pressure transducer or an oxidizer blockage.
- There are several failures that inop OMS FDI (FA MDM commfault or Pc transducer failed high).
- Always check redundant sources to confirm any malfunction.
- An OMS engine failure post-MECO should be signified by a down arrow on the MNVR display.
- Max blowdown on the OMS is approximately 39 percent.
- 1,000 lbs of OMS (approximately 8 percent) moves the X c.g. 1.5 inches aft and the Y c.g. 0.5 inches left or right.
- Max OMS quantity for landing = 21 percent.

2.19 PAYLOAD DEPLOYMENT AND RETRIEVAL SYSTEM (PDRS)

CONTENTS

Description 2.19-1
Remote Manipulator System (RMS) 2.19-1
Manipulator Positioning Mechanism ... 2.19-11
Payload Retention Mechanisms 2.19-14
Operations 2.19-18

Description

The PDRS consists of the hardware, software, and interfaces required to remotely hold and control the movements of a specified object, usually a payload, and to remotely observe or monitor objects or activities.

The PDRS includes the remote manipulator system, the manipulator positioning mechanisms, and manipulator retention latches. The PDRS also interfaces with other orbiter systems, such as the SM GPC, the payload retention latch assemblies, and the closed-circuit television.

Remote Manipulator System (RMS)

The RMS is the mechanical arm portion of the PDRS. The arm maneuvers a payload from the payload bay to its deployment position, and then releases it. The RMS can also grapple a free-flying payload, maneuver it to the payload bay, and then berth it in the orbiter. Other operations do not require payload deployment or retrieval, just payload maneuvering, and some involve only arm maneuvering with no payload attached.

The RMS is capable of deploying or retrieving payloads weighing up to 65,000 pounds. The RMS can also retrieve, repair, and deploy satellites, provide a mobile extension ladder for EVA crewmembers for work stations or foot restraints, and be used as an inspection aid to allow the flight crewmembers to view the orbiter or payload surfaces through one or two television cameras on the RMS.

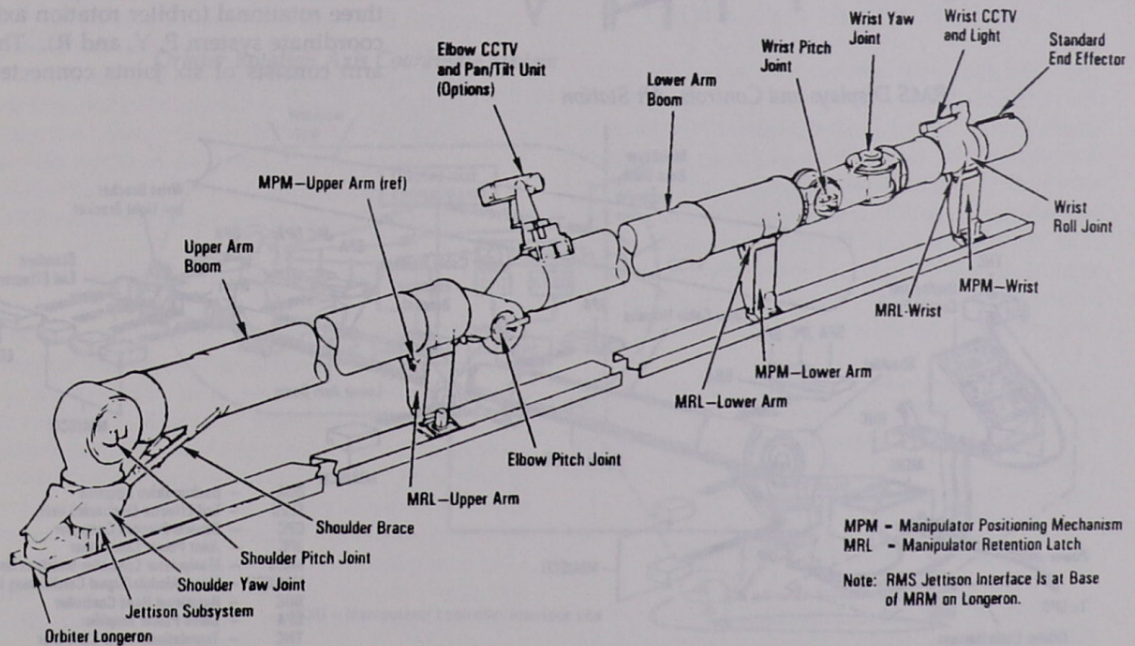

RMS–Stowed Position and General Arrangement

The basic RMS configuration consists of a manipulator arm, an RMS display and control panel, including rotational and translational hand controllers at the orbiter port aft flight deck crew station, and a manipulator controller interface unit that interfaces with the orbiter SM GPC. The RMS itself is installed on the port longeron of the payload bay for those missions requiring it. Some payloads carried aboard the orbiter for deployment do not require the RMS.

NOTE

Original concepts called for an optional second arm to be placed along the starboard longeron. It is no longer under consideration; however, residual references to the starboard arm still exist on orbiter panels and controls.

The RMS structure is attached to a manipulator positioning mechanism (MPM) that attaches to the orbiter longeron. When cradled, the arm rests on three MPM pedestals that contain manipulator retention latches (MRLs) for securing the arm during launch, entry, and periods of arm inactivity. During launch, entry, and any other times the payload bay doors are closed, the MPM is in the rolled in, or stowed, position. After the doors are opened on orbit, the MPM must be rolled out, or deployed, so as to not interfere with payload clearances.

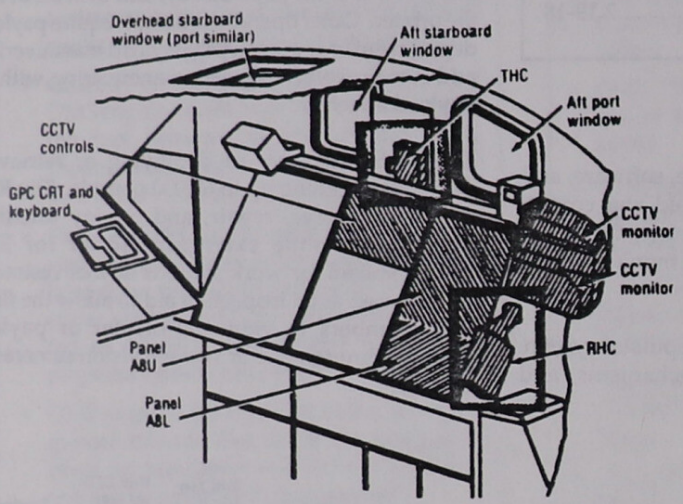

RMS Displays and Controls, Aft Station

The RMS arm is 50 feet 3 inches long and 15 inches in diameter. The arm has 6 degrees of freedom: three translational (orbiter body axis coordinate system X, Y, and Z) and three rotational (orbiter rotation axis coordinate system P, Y, and R). The arm consists of six joints connected

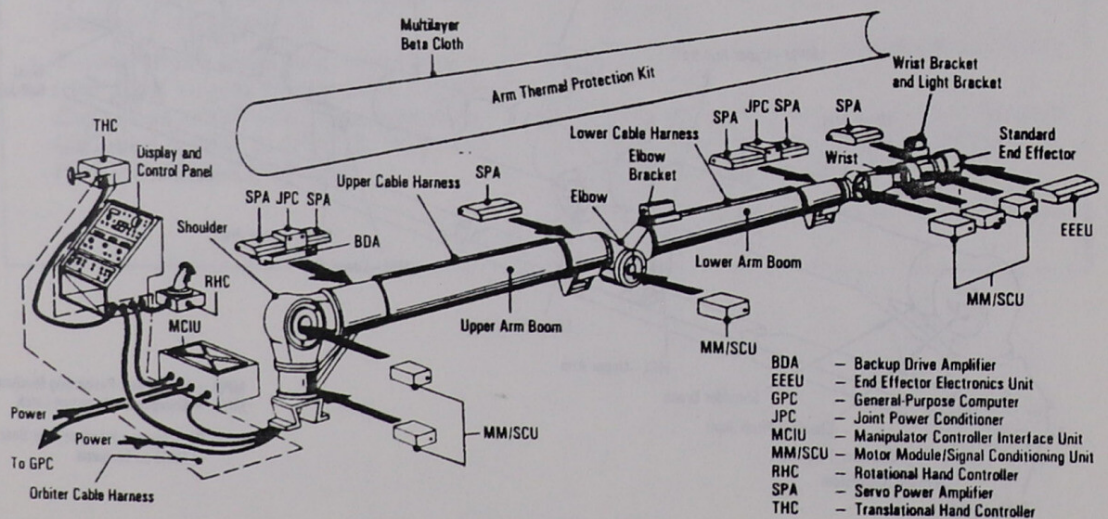

RMS Components

via structural members and has a payload capturing device on the end. It weighs 905 pounds, and the total system weighs 994 pounds.

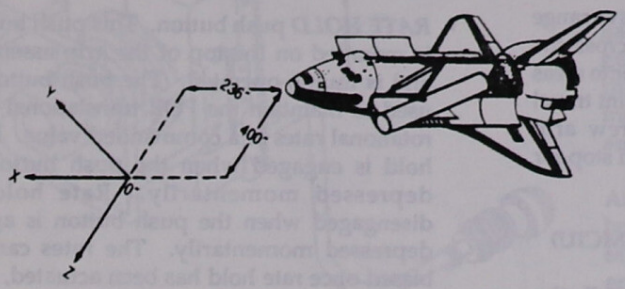

Orbiter Body Axis Coordinate System

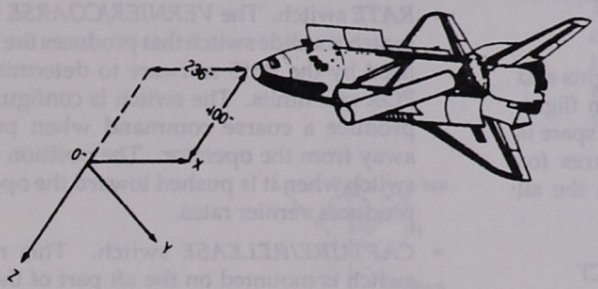

Orbiter Rotation Axis Coordinate System

On-orbit RMS operations are always performed by a team of two arm operators who equally divide each RMS task. The arm operator who controls the actual RMS trajectories is stationed on the port aft flight deck. The other operator is stationed on the starboard aft flight deck and controls CRT inputs, payload retention latch assemblies (PRLAs), and cameras.

The RMS has a built-in test capability to detect and display critical failures. It monitors the arm-based electronics (ABE), displays and controls, and the manipulator controller interface unit (MCIU) software checks. Failures are displayed on a light matrix on panel A8U and on the CRT and are available for downlink through orbiter telemetry.

All the major systems of the arm-based electronics are monitored. The MCIU checks the integrity of the communications link between itself and the arm-based electronics, displays and controls, and the orbiter SM GPC. The MCIU also monitors end effector functions, thermistor circuit operation, and its own internal integrity. The computer checks include an overall check of each joint's behavior through the consistency

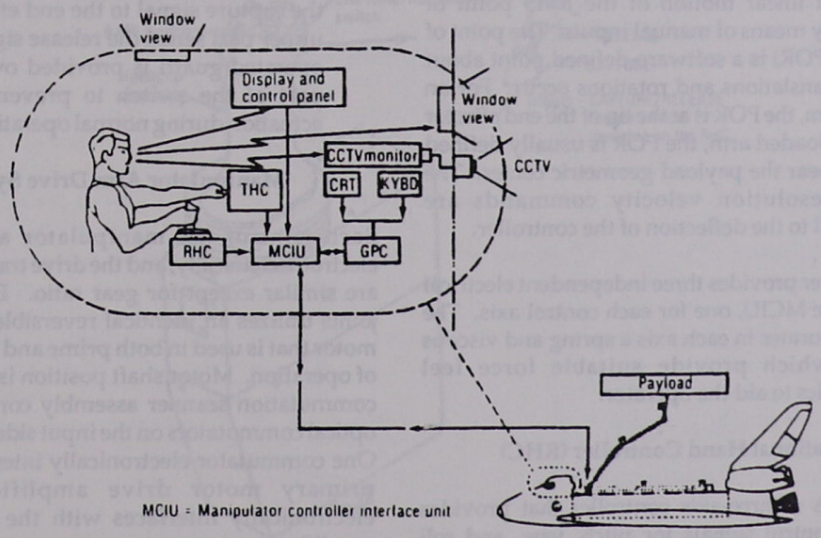

Shuttle RMS

check, encoder data validity, and the proximity of the arm to reach limits, soft stops, and singularities.

The RMS can only be operated in a weightless environment, since the arm dc motors are unable to move the arm's weight under the influence of Earth's gravity. Each of the six joints has an extensive range of motion, allowing the arm to reach across the payload bay, over the crew compartment, or to areas on the undersurface of the orbiter. Arm joint travel limits are annunciated to the flight crew arm operator before the actual mechanical hard stop for a joint is reached.

Manipulator Controller Interface Unit (MCIU)

The principal function of the MCIU is to handle the exchange of information between the SM GPC and the RMS. The MCIU manipulates data and controls the end effector auto capture/rigidization sequence logic.

A spare MCIU is usually flown on RMS flights and can be changed out with a failed MCIU in flight. The MCIU is located behind panel L17; the spare is stowed in a middeck locker. Procedures for changing out the MCIU are contained in the all vehicle IFM Checklist.

Translational Hand Controller (THC)

The THC allows an operator to control the three-dimensional linear motion of the RMS point of resolution by means of manual inputs. The point of resolution (POR) is a software-defined point about which all translations and rotations occur. For an unloaded arm, the POR is at the tip of the end effector (EE). For a loaded arm, the POR is usually defined to be at or near the payload geometric center. The point of resolution velocity commands are proportional to the deflection of the controller.

The controller provides three independent electrical inputs to the MCIU, one for each control axis. The THC incorporates in each axis a spring and viscous damper, which provide suitable force feel characteristics to aid the operator.

Rotational Hand Controller (RHC)

The RHC is a three-axis controller that provides electrical control signals for pitch, yaw, and roll control of the RMS. Control signals are proportional to manual input displacements in each of the three mutually perpendicular axes. The RHC also provides additional RMS controls through three switches located on the handgrip. The three switches are:

- *RATE HOLD* push button. This push button is mounted on the top of the grip assembly and is thumb-operated. The push button is used to maintain the POR translational and rotational rates at a commanded value. Rate hold is engaged when the push button is depressed momentarily. Rate hold is disengaged when the push button is again depressed momentarily. The rates can be biased once rate hold has been actuated, and the hand controllers have been returned to detent by deflecting a hand controller a second time.
- *RATE* switch. The *VERNIER/COARSE RATE* switch is a slide switch that produces the signal used by the RMS software to determine the POR rate limits. The switch is configured to produce a coarse command when pushed away from the operator. The position of the switch when it is pushed toward the operator produces vernier rates.
- *CAPTURE/RELEASE* switch. This rocker switch is mounted on the aft part of the grip assembly and is used to capture and release payloads. The lower part of the switch sends the capture signal to the end effector, and the upper part sends the release signal. A finger-operated guard is provided over the release part of the switch to prevent inadvertent actuation during normal operation of the RHC.

Manipulator Arm Drive System

Each joint of the manipulator arm is driven electromechanically, and the drive trains for all joints are similar except for gear ratio. Each of the six joints utilizes an identical reversible, brushless dc motor that is used in both prime and backup modes of operation. Motor shaft position is provided by a commutation scanner assembly consisting of two optical commutators on the input side of each motor. One commutator electronically interfaces with the primary motor drive amplifier, and one electronically interfaces with the backup drive amplifier.

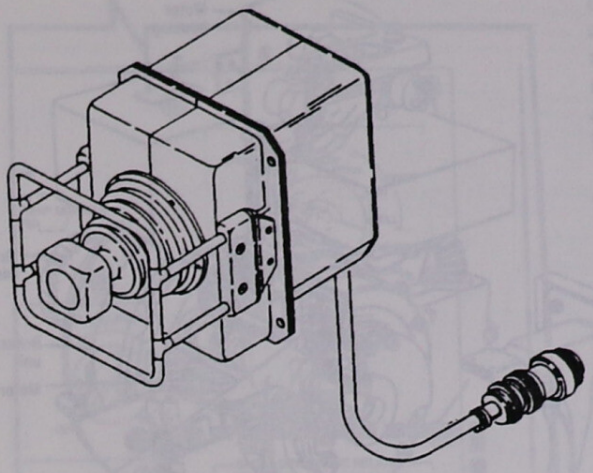

Translational Hand Controller

The drive motor is held in a quiescent state by the brakes, which apply a brake pad to a contact surface on the motor shaft. Continuous application of 28 V dc to the brake is required to disengage the brake.

Each joint contains a gear train that differs in gearing ratios. Dry lubrication is used throughout the gear trains. Backlash is minimized by the use of close tolerance gears and a backlash control device.

An electro-optical encoder is fitted to the gear box output of each joint. The encoder is used to sense the angular position of the joint. The encoder uses an LED light source and a single disk. The encoder in the wrist roll-joint has a hole in the center to allow cables to pass through.

The manipulator arm contains six servo power amplifiers (SPAs), one for each joint. Each SPA is associated with a motor module and a position encoder. The major function of the SPA is to provide a drive signal to the motor in response

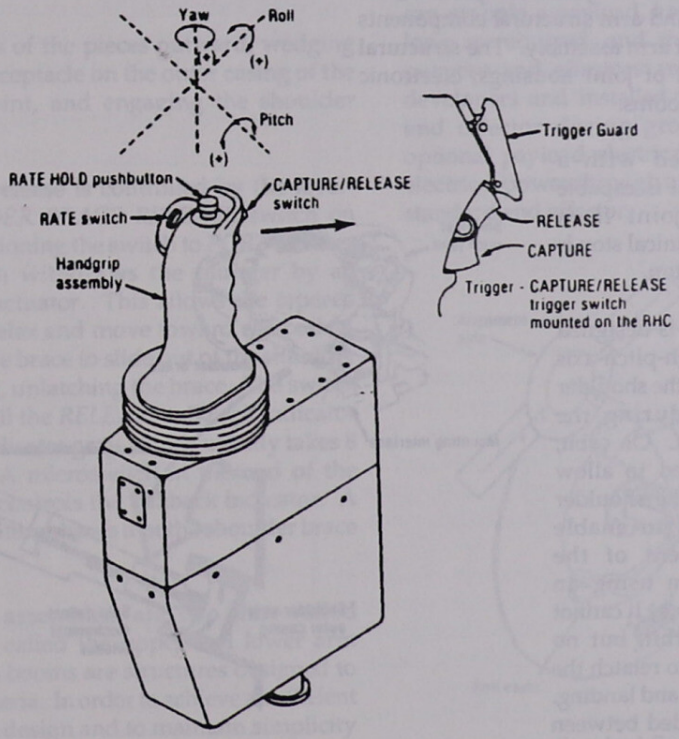

Rotational Hand Controller

to digital control signals generated by the GPC and supplied through the MCIU or to a direct drive command signal from the control panel.

The arm contains two joint power conditioners. One is located in the shoulder and serves the shoulder and elbow joints. The second is located in the wrist and serves the three wrist joints. The function of the conditioner is to convert the MN A +28 V dc to provide secondary regulated supply voltages at ± 15 V, + 10 V, and +5.1 V dc to the SPA, motor commutators, and position encoders.

One backup drive amplifier is located in the shoulder. The backup drive amplifier conditions +28 V dc MN B power for arm use and provides drive signals to the selected joint motor.

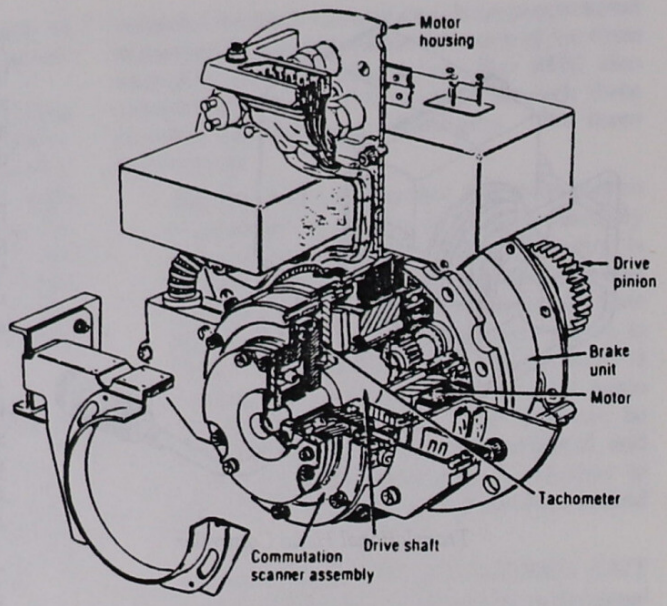

Motor Module

Mechanical Arm Assembly

The manipulator arm drive system components, the arm cable harness, and arm structural components form the mechanical arm assembly. The structural components consist of joint housings, electronic housings, and arm booms.

Each joint is fitted with a mechanical stop that is capable of stopping the joint from moving. This mechanical stop is known as the hard stop.

The shoulder brace is designed to minimize the high-pitch-axis moment loading on the shoulder pitch gear train during the launch environment. On orbit, the brace is released to allow RMS operations. The shoulder brace is designed to enable ground engagement of the release mechanism using an external power source. It cannot be relatched on orbit, but no requirement exists to relatch the brace before reentry and landing. A plunger is extended between two pieces of tapered metal,

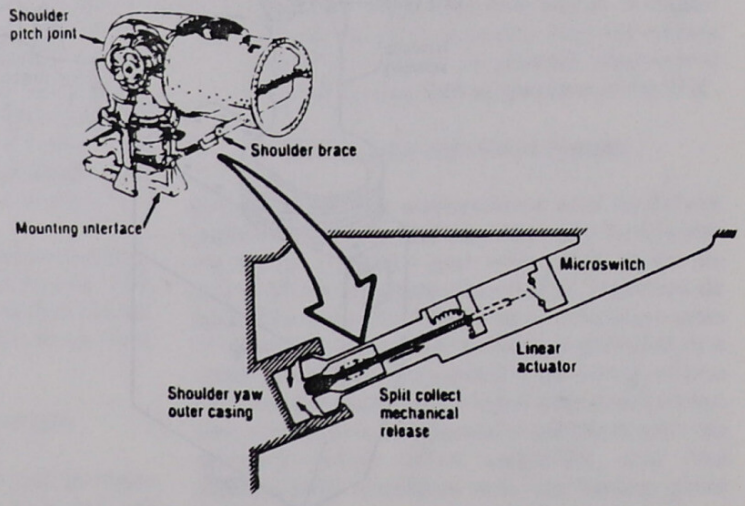

Shoulder Brace

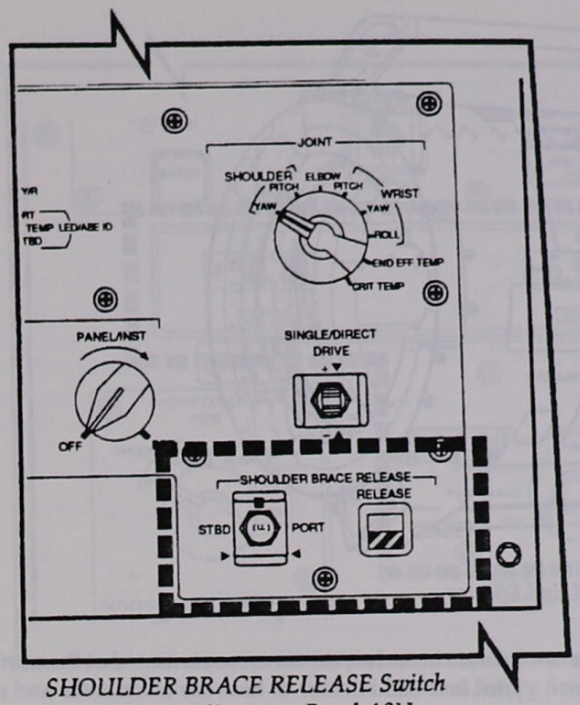

SHOULDER BRACE RELEASE Switch and Talkback Indicator on Panel A8U

pushing the ends of the pieces outward, wedging the ends of the receptacle on the outer casing of the shoulder yaw joint, and engaging the shoulder brace.

Shoulder brace release is controlled by the lever-locked *SHOULDER BRACE RELEASE* switch on panel A8U. Positioning the switch to *PORT* releases the brace, which withdraws the plunger by an electrical linear actuator. This allows the tapered metal pieces to relax and move toward each other, which permits the brace to slide out of the shoulder yaw outer casing, unlatching the brace. The switch must be held until the *RELEASE* talkback indicator on panel A8U indicates gray, which usually takes 8 to 10 seconds. A microswitch at the end of the plunger's travel controls the talkback indicator. A barberpole indication shows that the shoulder brace is not released.

The arm boom assemblies are two thin-walled tubular sections called the upper and lower arm booms. The arm booms are structures designed to meet stiffness criteria. In order to achieve an efficient stiffness/weight design and to maintain simplicity of construction, a circular section graphite/epoxy composite design is implemented. End flanges are made of aluminum alloy and are bonded and bolted to the graphite/epoxy tubular sections. Provisions are made for the installation of electrical cable harness assemblies along the length of each arm.

On top of the lower arm and immediately below the elbow joint interface is a mount for installation of an optional elbow CCTV camera and pan/tilt unit.

Wire arm cable harnesses are designed to minimize electrical cross-talk and electromagnetic interference. They are of a weight-efficient design and are installed on the outside of the upper and lower arm booms, utilizing a lightweight mounting technique with adhesive Kapton tape. Sufficient slack is allowed for relative thermal expansion and contraction between the cables and arm booms and for movement of the joints.

End Effectors

The RMS can operate with standard or special-purpose end effectors. The standard end effector can grapple a payload, keep it rigidly attached as long as required, and then release it. Special-purpose end effectors are designed by payload developers and installed instead of the standard end effector during ground turnaround. An optional payload electrical connector can receive electrical power through a connector located in the standard end effector.

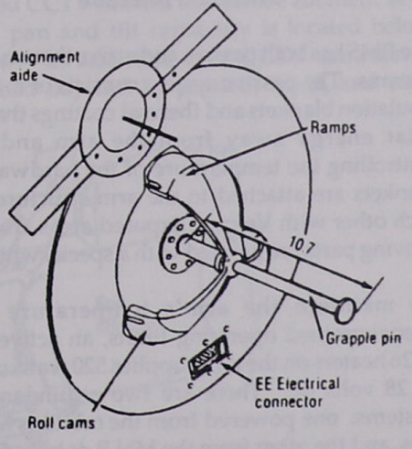

Standard Grapple Fixture

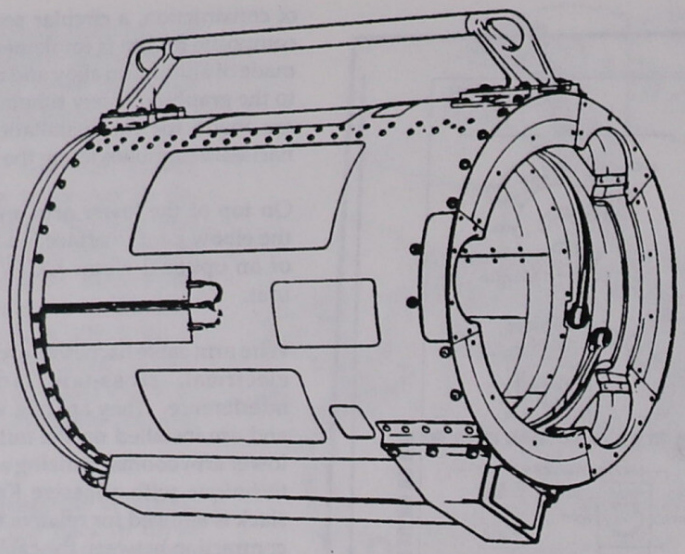

Standard End Effector

The standard end effector drive system captures or releases a payload using a rotating ring at the open end of the unit to close three wire snares around the payload-mounted grapple fixture. The entire snare ring is then pulled into the end effector until the grapple fixture base plate is flush against the tip of the end effector. This process is called rigidizing the end effector. To release a payload, the carriage is extended or derigidized to a point where there is no axial tension on the grapple fixture-probe, and the snares are then opened.

Thermal Protection

The RMS has both passive and active thermal control systems. The passive system consists of multilayer insulation blankets and thermal coatings that reflect solar energy away from the arm and aid in controlling the temperature of the hardware. The blankets are attached to the arm structure and to each other with Velcro. Exposed areas around the moving parts are painted with a special white paint.

To maintain the arm's temperature within predetermined operating limits, an active system of 26 heaters on the arm supplies 520 watts of power at 28 volts dc. There are two redundant heater systems: one powered from the orbiter's MN A dc bus, and the other from the MN B dc bus. Only one system is required for proper thermal control. The heaters in each system are concentrated at the arm's joint and end effector to heat the electronics and ac motor modules. The heaters are enabled by the *PORT RMS HEATER A* and *B* guarded switches on panel A8L. When the switches are positioned to

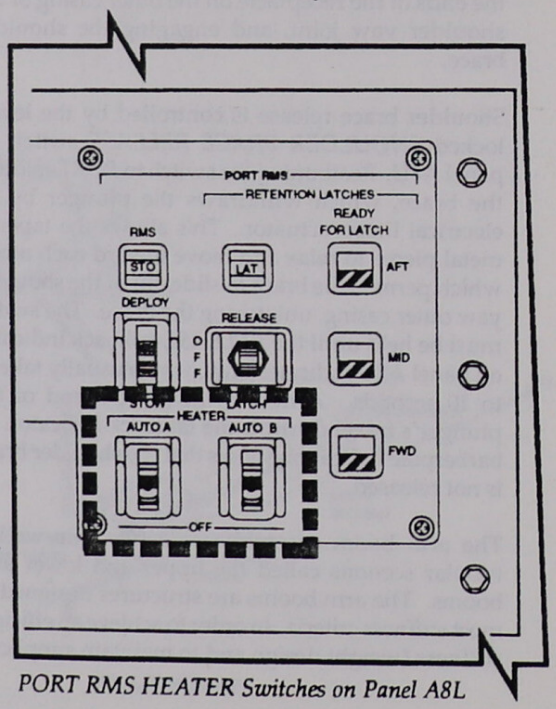

PORT RMS HEATER Switches on Panel A8L

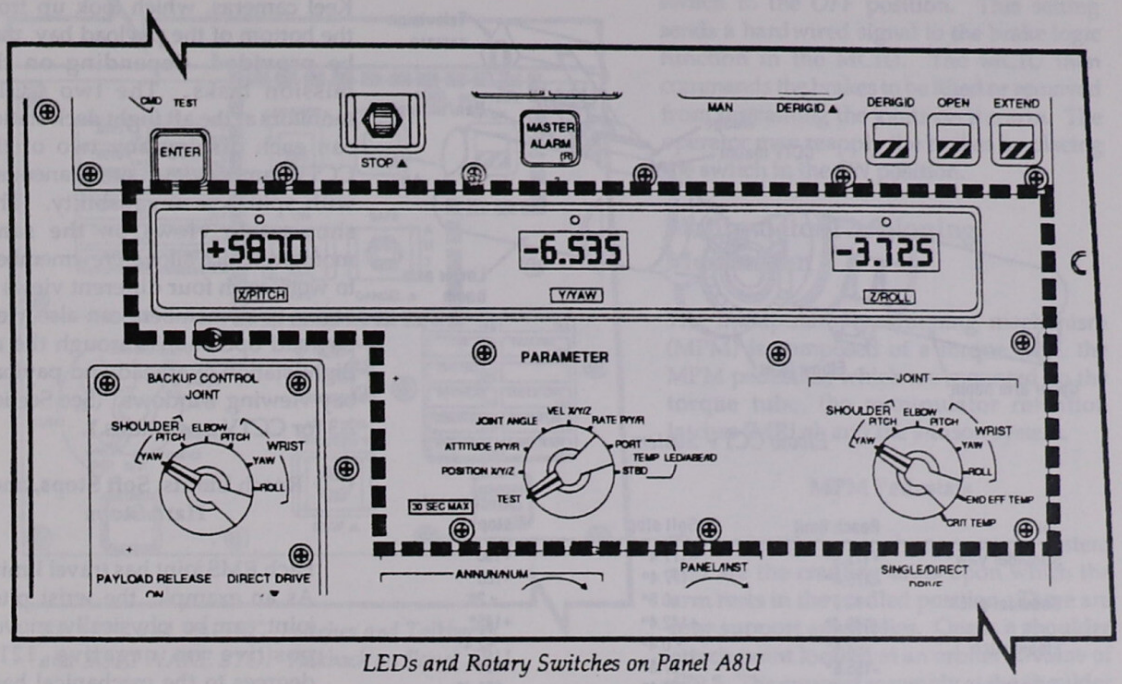

LEDs and Rotary Switches on Panel A8U

AUTO, the heaters are thermostatically controlled by 12 thermistors located along the arm. The heaters are automatically turned on at 14° F and off at 43° F.

LEDs 1, 2, and 3 in the middle of panel A8U can be used in conjunction with the *JOINT* and *PARAMETER* rotary switches to display arm temperatures in degrees Fahrenheit along with identification numbers. When the *JOINT* switch is positioned to *END EFF TEMP*, and the *PARAMETER* switch is positioned to *PORT TEMP*, LED 1 displays the commutator's temperature, LED 2 displays the end effector electronics' temperature, and LED 3 identifies the location of the thermistor to be in the end effector.

CCTV

The orbiter's CCTV aids the flight crew in monitoring PDRS operations. The arm has provisions on the wrist joint for a viewing light and a fixed CCTV camera that can be zoomed. A CCTV with pan and tilt capability is located below the elbow. In addition, four CCTV cameras in the payload bay can be panned, tilted, and zoomed.

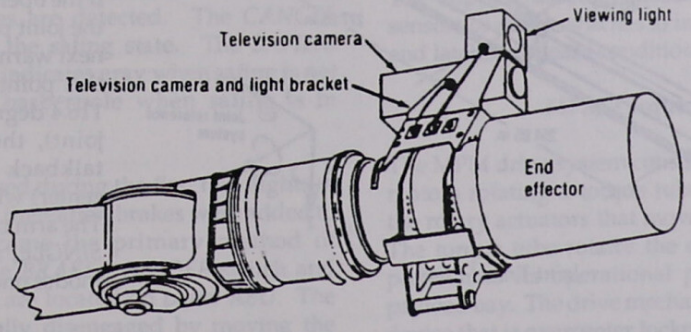

Wrist CCTV and Light Configuration

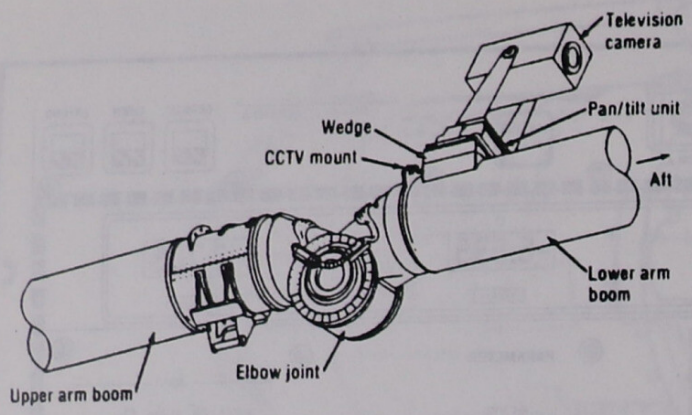

Elbow CCTV System

Joint	Reach limit	Soft stop	Mechanical stop
Shoulder yaw	+175.4°	+177.4°	+180°
	-175.4°	-177.4°	-180°
Shoulder pitch	+2.6°	+0.6°	-2°
	+140.4°	+142.4°	+145°
Elbow pitch	-2.4°	-0.4°	+2.4°
	-155.6°	-157.6°	-161°
Wrist pitch	-114.4°	-116.4°	-121.4°
	+114.4°	+116.4°	+121.4°
Wrist yaw	-114.6°	-116.6°	-121.3°
	+114.6°	+116.6°	+121.3°
Wrist roll	-440.0°	-442°	-447°
	+440.0°	+442°	+447°

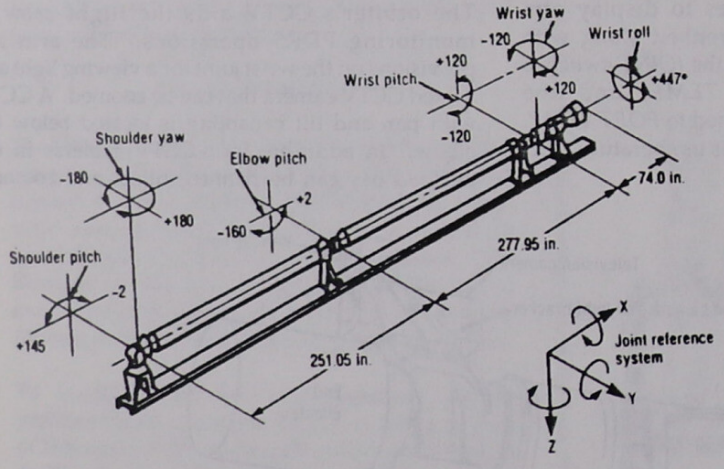

Joint Travel Limits

Keel cameras, which look up from the bottom of the payload bay, may be provided, depending on the mission tasks. The two CCTV monitors at the aft flight deck station can each display any two of the CCTV camera views simultaneously with split screen capability. This shows two views on the same monitor, which allows crewmembers to work with four different views at once. Crewmembers can also view payload operations through the aft flight station overhead and payload bay viewing windows. (See Section 2.3 for CCTV operations.)

Reach Limits, Soft Stops, and Hard Stops

Each RMS joint has travel limits. As an example, the wrist pitch joint can be physically moved positive or negative 121.4 degrees to the mechanical hard stop. At positive or negative 114.4 degrees, software warns the RMS operator that the arm is approaching its end of travel by activating the yellow *REACH LIM* light and the red *MASTER ALARM* push button indicator on panel A8U, sounding the master alarm, displaying a computer fault message, sounding an SM tone, and displaying a REACH LIMIT indication on the CRT.

If the operator continues driving the joint past the reach limit, the next warning is the soft stop. At this point (positive or negative 116.4 degrees for the wrist pitch joint), the *SOFTWARE STOP* talkback on panel A8U (top center) will indicate barberpole. The arm can only be operated in *SINGLE*, *DIRECT*, or *BACKUP* modes once it reaches a soft stop.

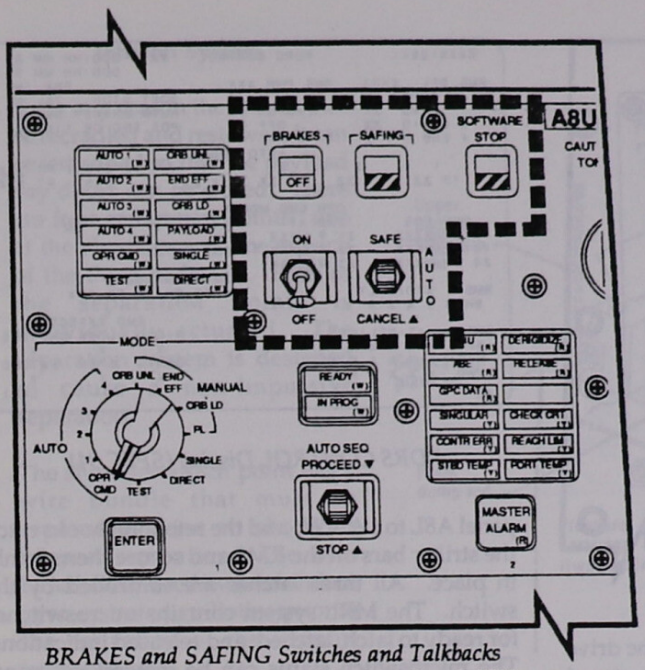

BRAKES and SAFING Switches and Talkbacks and SOFTWARE STOP Talkback on Panel A8U

If the operator continues to drive the joint in this direction, motion will stop at positive or negative 121.4 degrees. All joint angles equal 0 degrees when the arm is cradled.

Safing and Braking

Safing and braking are the two methods available for bringing the arm to rest. Safing can be accomplished by positioning the *SAFING* switch at the top of panel A8U to *SAFE*, which brings the arm to rest using the servocontrol loops. When the switch is positioned to *AUTO*, safing is initiated by the MCIU when certain critical built-in test equipment failures are detected. The *CANCEL* position removes the safing state. The *SAFING* talkback indicator indicates gray when safing is not in progress and barberpole when safing is in progress.

Safing was only used during the first few flights of the PDRS. Shortly thereafter, brakes were added to the arm and became the primary method of restraining it. The *BRAKES ON/OFF* switch and talkback indicator are located on panel A8U. The brakes are manually disengaged by moving the switch to the *OFF* position. This setting sends a hardwired signal to the brake logic function in the MCIU. The MCIU then commands the brakes to be lifted or removed from restraining the joints on the arm. The operator may reapply the brakes by placing the switch in the *ON* position.

Manipulator Positioning Mechanism

The manipulator positioning mechanism (MPM) is composed of a torque tube, the MPM pedestals, which are mounted on the torque tube, the manipulator retention latches (MRLs), and the jettison system.

MPM Pedestals

The pedestals house the separation system and are the cradling units upon which the arm rests in the cradled position. There are four support assemblies. One is a shoulder attach point located at an orbiter X-value of 679.5. The support assembly at the shoulder attach point is unique. Since the RMS is attached to the orbiter at this point, it does not contain an MRL, but does contain a separation system that is part of the MPM.

Three pedestals are located at X-values of 911.05, 1189, and 1256.5. The three pedestals are similar. Each contains two 45 degree saddle interfaces for cradling the arm and a retention latch to lock the arm in place. The mating hardware for the arm consists of two 45 degree mating plates to rest on the support saddle and a latch striker held by the retention latch.

The support assembly also contains redundant sensors or microswitches to indicate ready-to-latch and latched/release conditions.

MPM Torque Tube

The MPM drive system consists of dual redundant motors rotating a torque tube that in turn drives the rotary actuators that move the RMS pedestals. The torque tube rotates the arm from its stowed position to its operational position outside the payload bay. The drive mechanism is an overcenter device that is overcenter locked when the arm is in

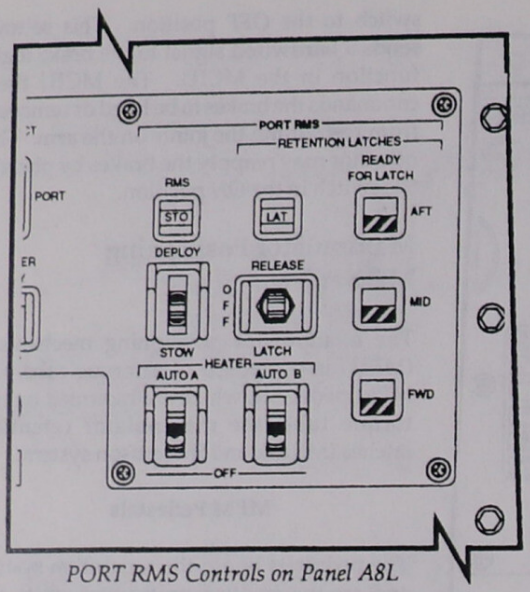

PORT RMS Controls on Panel A8L

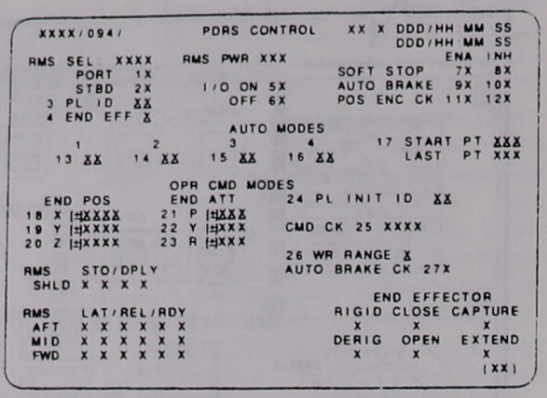

PDRS CONTROL Display (SPEC 94)

either the stowed or deployed positions. The drive system contains microswitches needed for stow/deploy indications. Current flight rules prohibit loaded arm operations from the stowed configuration.

The *PORT RMS DEPLOY/STOW* switch is located on panel A8L. The talkback above the switch indicates *STO* when the MPMs are in the stowed position, *DEP* when they are deployed, and barberpole in transit. Status of the shoulder MPM can be monitored on the SPEC 94 PDRS CONTROL display (RMS STO/DPLY SHLD).

Manipulator Retention Latches

The arm is latched in three locations (aft, mid, and forward) along the orbiter longeron to secure it for launch and entry loads. The retention latches are dual rotating surfaces that are driven by redundant motors. When the three ready-to-latch indications are received, the operator positions the *PORT RMS RETENTION LATCHES* switch on panel A8L to *LATCH*, and the retention hooks catch the striker bars on the RMS and secure them firmly in place. All three latches are controlled by the switch. The MRL system contains microswitches for ready to latch, latched, and released indications. The microswitch status can be viewed via panel A8L (*AFT, MID, FWD*) talkbacks and the SPEC 94 PDRS CONTROL CRT display (RMS LAT/REL/RDY).

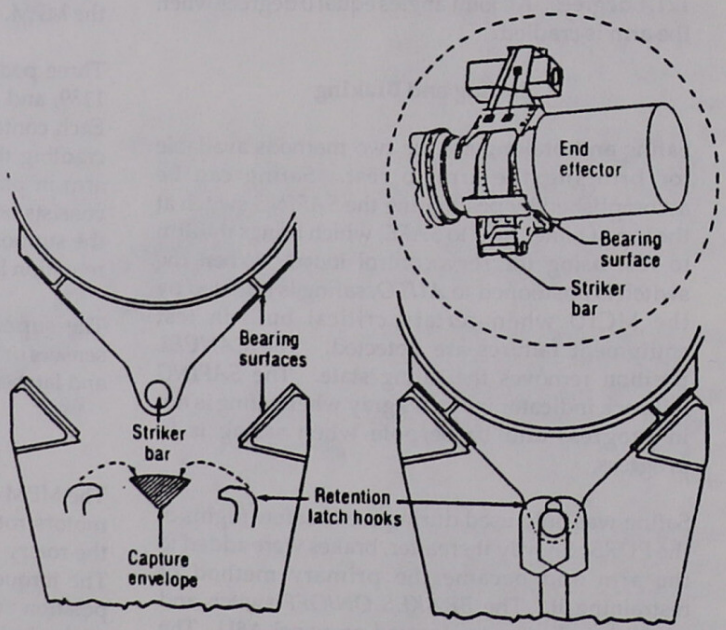

RMS Retention Mechanism

Jettison System

If for any reason the arm cannot be recradled and restowed, it can be jettisoned so that the payload bay doors can be closed. There are four separation points: one at the shoulder and one at each of the three pedestals. Each of the separation points is individually actuated. The separation system is designed to cause a non-impulsive separation.

The shoulder attach point has a wire bundle that must be separated prior to shoulder support separation. The wire bundle is severed by a redundant pyro-operated guillotine prior to the activation of the support jettison system.

The jettison system works by redundant pressure cartridges firing to force down a retractor that pulls back four overcenter tie-down hooks, releasing the

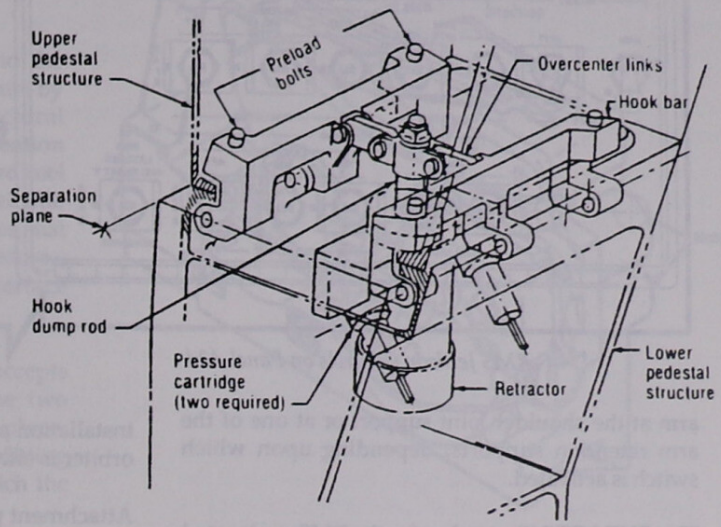

Jettison System

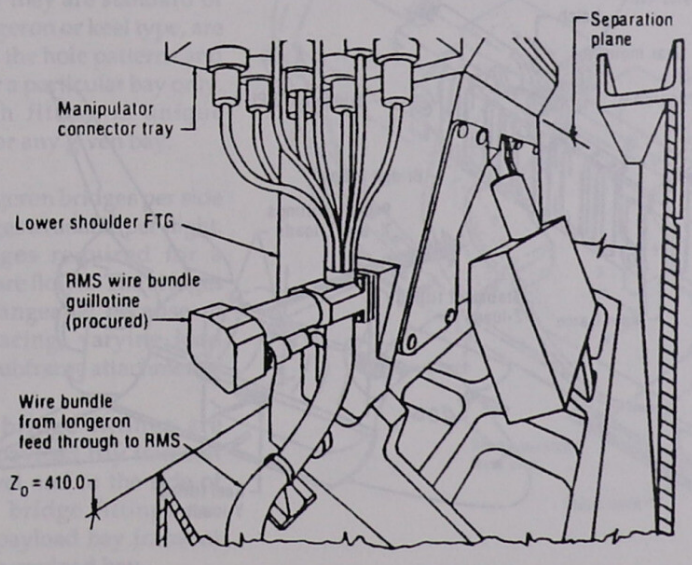

RMS Shoulder Wire Bundle

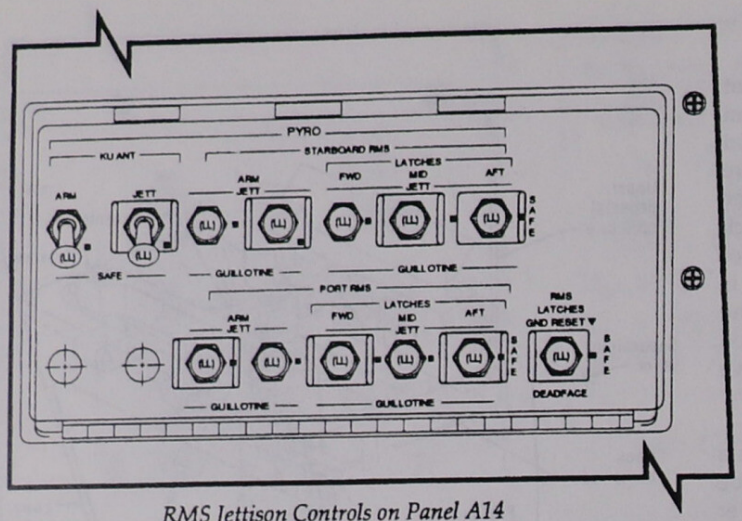

RMS Jettison Controls on Panel A14

arm at the shoulder joint support or at one of the arm retention supports, depending upon which switch is activated.

The *GUILLOTINE* switches for the RMS are located on panel A14.

Payload Retention Mechanisms

Non-deployable payloads are retained by bolted passive retention devices, and deployable payloads are secured by motor-driven, active retention devices. Payloads are secured in the orbiter payload bay with the payload retention system or are equipped with their own unique retention systems. The orbiter payload retention system provides three-axis support for up to three payloads per flight. The payload retention mechanisms secure the payloads during all mission phases and allow installation and removal of the payloads when the orbiter is either horizontal or vertical.

Attachment points in the payload bay are in 3.933-inch increments along the left- and right-side longerons and along the bottom centerline of the bay. Of the potential 172 attach points on the longerons, 48 are unavailable because of the proximity of spacecraft hardware. The remaining

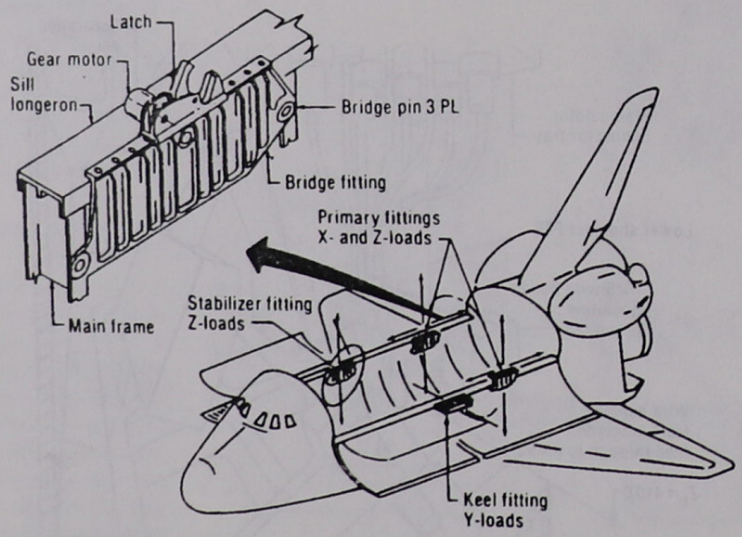

Active Payload Retention System

124 may be used for deployable payloads. Along the centerline keel, 89 attach points are available, 75 of which may be used for deployable payloads.

Bridge Fittings

Bridge fittings are used to react to the loads imparted to the orbiter structure by the payload and provide a structural interface for both the payload retention latch assemblies (PRLAs) and active keel actuators (AKAs). Bridge fittings fall into standard and lightweight categories, just as the PRLAs and AKAs do, and of course, differ in type when used to interface longeron versus keel latches.

The keel bridge has a T-slot that accepts the T-bar fitting of the AKA; the two mated members are bolted in place. Contrastingly, the longeron bridge fitting incorporates a T-bar rail onto which the PRLA T-slot slides.

The standard and lightweight bridge fittings differ both in cross-sectional thickness and material. The standard fittings are made of titanium, and are thicker than their lightweight aluminum counterparts. Bridge fittings, whether they are standard or lightweight, longeron or keel type, are compatible with the hole patterns and wiring routes for a particular bay only. Therefore, each fitting is unique dimensionally for any given bay.

There are 13 longeron bridges per side and 12 keel bridges available per flight. Only the bridges required for a particular flight are flown. The bridges are not interchangeable because of main frame spacing, varying load capability, and subframe attachments.

The longeron bridge fittings are attached to the payload bay frame at the longeron level and at the side of the bay. Keel bridge fittings are attached to the payload bay frame at the bottom of the payload bay.

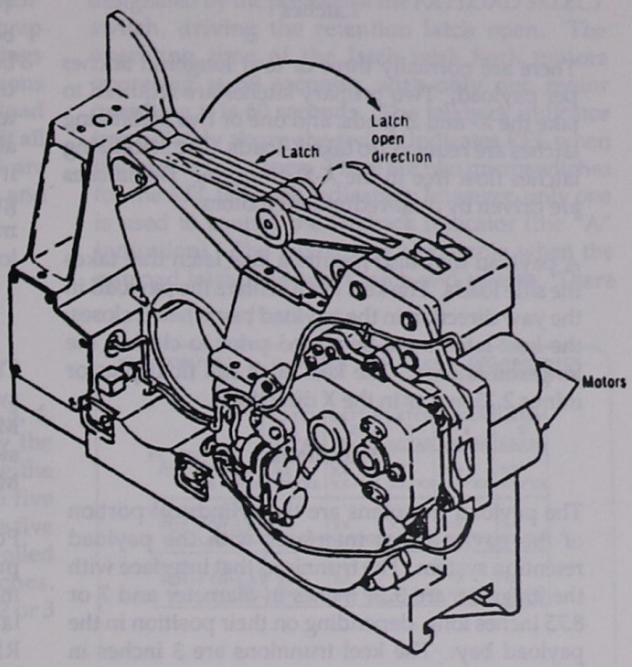

Payload Retention Latch

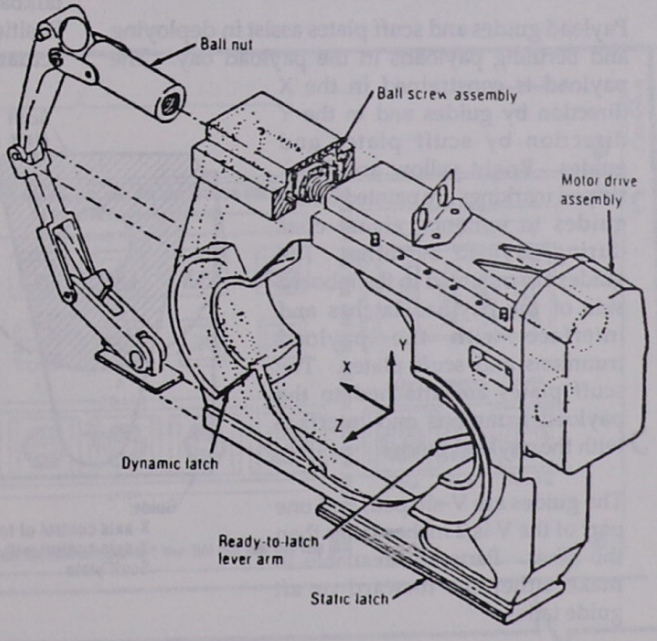

Active Keel Actuator

Latches

There are normally three or four longeron latches per payload. Two primary latches are required to take the X- and Z-loads, and one or two stabilizing latches are required to take Z-loads. The stabilizing latches float free in the X-X direction. The latches are driven by dual-redundant motors.

A payload may also require a keel latch that takes the side loads. The keel latch centers the payload in the yaw direction in the payload bay when it closes; the keel latch must be closed prior to closing the longeron latches. The keel latch can float plus or minus 2.75 inches in the X direction.

Trunnions

The payload trunnions are the cylindrical portion of the payload that interfaces with the payload retention system. The trunnions that interface with the longeron are 3.24 inches in diameter and 7 or 8.75 inches long, depending on their position in the payload bay. The keel trunnions are 3 inches in diameter and vary in length from 4 to 11.5 inches, depending on where they fit in the payload bay.

Payload Guides/Scuff Plates

Payload guides and scuff plates assist in deploying and berthing payloads in the payload bay. The payload is constrained in the X direction by guides and in the Y direction by scuff plates and guides. Bright yellow and black striped markings are painted on the guides to enhance visual cues during payload berthing. The guides are mounted to the inboard side of the payload latches and interface with the payload trunnions and scuff plates. The scuff plates are attached to the payload trunnions and interface with the payload guides.

The guides are V-shaped, and one part of the V is 2 inches taller than the other. Parts are available to make either the forward or aft guide taller.

This difference enables the operator monitoring the berthing or deployment operations through the aft bulkhead CCTV cameras to better determine when the payload trunnion has entered the guide. The top of the taller portion of the guide is 24 inches above the centerline of the payload trunnion when it is all the way down in the guide. The top of the guide has a 9-inch opening. These guides are mounted to the 8-inch guides that are a part of the longeron payload retention latches.

Payload Retention System Controls

The *PAYLOAD RETENTION LOGIC POWER SYS 1* switch on panel A6U positioned to *ON* provides MN A bus power to the *PAYLOAD SELECT* rotary switch. The *SYS 2* switch positioned to *ON* provides MN B bus power to the *PAYLOAD SELECT* switch.

Positioning the *PAYLOAD SELECT* switch to *1* provides power-on logic for the dual actuator motors of up to five latches for one payload, the latch status for that payload on DISP 97 PL RETENTION, and the talkback indications associated with the payload. Position 2 of the switch provides power-on logic for the dual actuator motors of up to five latches for the second payload, the latch status for that payload on DISP 97, and the talkback indications associated with that payload. Position 3 provides power-on logic for the dual actuator motors of up to five latches for the third

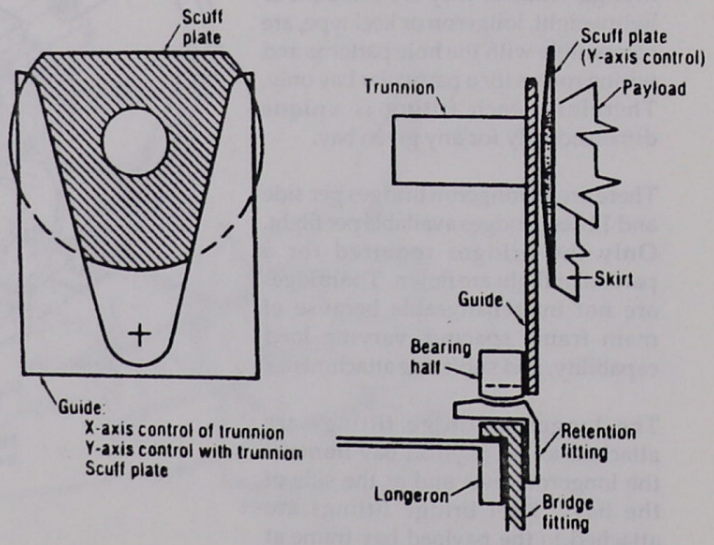

Orbiter Payload Guide, Active Retention Fitting

payload, the latch status for that payload on DISP 97, and the talkback indications associated with up to five latches. In addition, two monitor settings are available (both labeled "M"). These positions allow the crewmember to monitor all the payload retention latches at once on DISP 97, but inhibit all latch control commands. Talkback indicators are also inhibited when in the monitor position and indicate barberpole.

NOTE

Payload retention latch wiring configurations are mission-dependent.

The *PAYLOAD RETENTION LATCHES 1, 2, 3, 4,* and *5* switches on panel A6U are enabled by the *PAYLOAD SELECT* rotary switch. Positioning the *PAYLOAD SELECT* switch to *1* enables up to five retention latches for payload 1, and each of the five retention latches for payload 1 would be controlled by the individual *1, 2, 3, 4,* and *5* switches. Positioning the *PAYLOAD SELECT* switch to 2 or 3 has the same effect for payloads 2 and 3.

Positioning a *PAYLOAD RETENTION LATCHES* switch to *RELEASE* enables ac power to the dual electric motors associated with the retention latches designated by the position of the *PAYLOAD SELECT* switch, driving the retention latch open. The operating time of the latch with both motors operating is 30 seconds; with only one motor operating it is 60 seconds. The talkback indicator immediately above the switch indicates *REL* when the latch is fully open. There are two microswitches for the *REL* talkback indication; however, only one is used to control the talkback indicator (the "A" indication). The talkback is barberpole when the payload latch is between latch and release. There

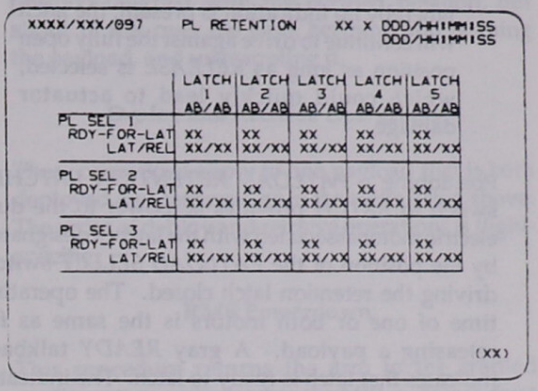

DISP 97 PL RETENTION Display

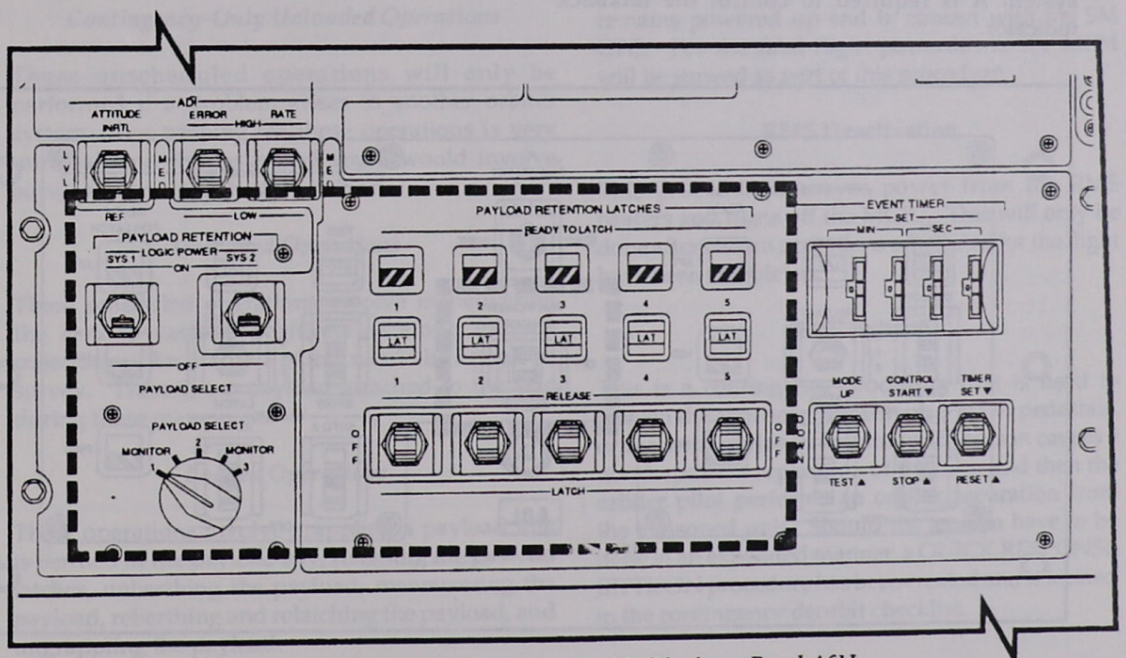

PAYLOAD RETENTION Switches and Talkbacks on Panel A6U

are two microswitches for the ready-for-latch talkback indication; however, as above, only the "A" indication is used to control the talkback indicator.

NOTE

When driving the *PAYLOAD RETENTION LATCHES* to *RELEASE*, do not continue to command a release for longer than 60 seconds if no *REL* indication is received. If the "A" release microswitch has failed whereby no indication is present, the latch will continue to drive against the fully open position as long as *RELEASE* is selected, which could quickly lead to actuator damage.

Positioning a *PAYLOAD RETENTION LATCHES* switch to *LATCH* provides ac power to the dual electric motor associated with the latches designated by the position of the *PAYLOAD SELECT* switch, driving the retention latch closed. The operating time of one or both motors is the same as for releasing a payload. A gray *READY* talkback indicates that latch is ready to latch. The indicator shows *LAT* when the latch is closed. There are two microswitches for the *LAT* indication; however, only system A is required to control the talkback indicator.

Operations

The RMS can perform a wide range of operations. This section gives an overview of these operations, as well as the actions required to configure the arm to support these operations.

On-Orbit Initialization

Prior to any planned RMS operations, the shoulder brace must be released, and for any loaded operations, the MPM must be deployed. This procedure contains both of these activities, and checks the status of some of the panel lights, talkbacks, and switches. The PDRS CONTROL SPEC 94 display is called up, and the interface with the SM GPC is established. This operation is usually scheduled at about 2 hours MET.

RMS Powerup

This procedure releases the MRLs and gets the arm out of the cradle to a "pre-cradle" configuration. This procedure is usually performed several times during a flight, as the arm is always powered down when not in use. The *RMS POWER* switch is on panel A8L.

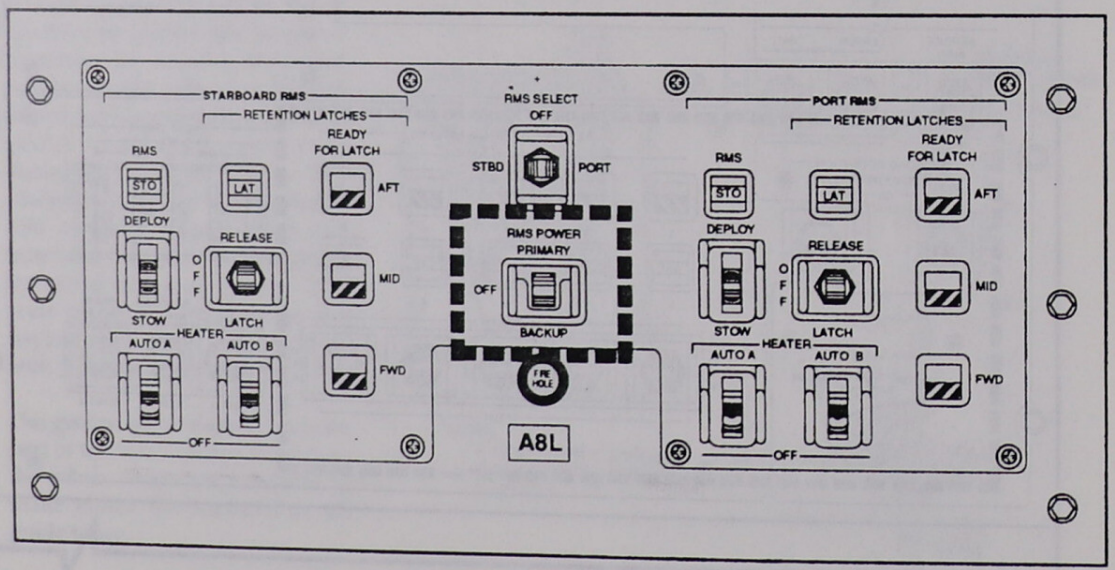

RMS POWER Switch on Panel A8L

NOTE

Placing the *RMS POWER* switch to *PRIMARY* generates an RMS master alarm. This alarm is generated because the panel powers up faster than the MCIU, thereby causing the *MASTER ALARM* light and tone to annunciate before the MCIU can respond with the proper master alarm flag. This is a normal condition and will occur every time the *RMS POWER* switch is cycled *OFF* and back to *PRIMARY*.

RMS Checkout

This procedure verifies in exacting detail that all the arm hardware and the panel switches and functions are in good operating condition. This is about an hour-long procedure and is done only once per flight. It is usually scheduled at about 3 or 4 hours MET on flight day 1 in order to allow plenty of time for any problems to be worked around.

Flight-Specific Operations

The arm can perform six different types of operations. One or more may be done per flight. These operations are broken down as described below.

Contingency-Only Unloaded Operations

These unscheduled operations will only be performed if a problem arises in another orbiter system. The training for these operations is very minimal, and the tasks performed would involve surveys of some parts of the orbiter.

Unloaded Operations

These scheduled operations involve maneuvering the arm to various positions or along various trajectories. An example of this would be a payload survey. There is no payload attached to the arm during these maneuvers.

Loaded Operations

These operations involve grappling a payload that is berthed in the payload bay, releasing the payload latches, unberthing the payload, maneuvering the payload, reberthing and relatching the payload, and ungrappling the payload.

Deploy Operations

These operations involve grappling a payload that is berthed in the payload bay, releasing the payload latches, unberthing the payload, maneuvering the payload to the release position and orientation, and releasing the payload.

Retrieve Operations

These operations involve capturing a free-flying payload, maneuvering the payload to a hover position (aligned with the berthed position, but about 10 feet over the bay), berthing and latching the payload, and ungrappling it.

Deploy and Retrieve Operations

These operations apply to one payload that is both deployed and retrieved as in the steps listed above. The order of deploy and retrieve operations is flight-specific.

RMS Powerdown

This procedure returns the arm to the cradled configuration and relatches the MRLs. This is done any time arm operations are not required. The power to the ABE is deactivated, but the MCIU remains powered up and in contact with the SM GPC. For the final flight powerdown, the MPM will be stowed as part of this procedure.

RMS Deactivation

This procedure removes power from the RMS heaters and turns off the MCIU. This will only be done after all arm operations scheduled for the flight have been completed.

RMS Jettison

This is a contingency procedure that is used to jettison the arm only, the arm plus MPM pedestals, or the arm/payload combination. Jettison causes a non-impulsive separation of the arm, and then the orbiter pilot performs an orbiter separation from the jettisoned unit. Should the jettison have to be done in an expedited manner, a QUICK RESPONSE JETTISON procedure has been created and is located in the contingency deorbit checklist.

Operating Modes

The RMS can be operated in a variety of modes. These modes are detailed below.

Single Joint Modes

Operating the arm in a single joint mode allows only one joint at a time to be driven. Single joint operations are very painstaking and time consuming, and so are only used when absolutely necessary. Uncradling and cradling must be done via a single joint mode, since the arm is in the soft stop region for several joints. The single joint modes, selected by two rotary switches on panel A8U, are *SINGLE*, which is a computer-supported mode, *DIRECT*, which commands the joints via hardwired signals and uses MN A (primary) power, and *BACKUP*, which commands the joints via hardwired signals and uses MN B (backup) power.

Manual Augmented Modes

The manual augmented modes are computer-supported modes that use the RMS hand controllers (HCs) to control the arm trajectories. The modes that fall into these categories are orbiter unloaded, orbiter loaded, end effector, and payload modes. They are selected by corresponding positions of the *MODE* rotary switch on panel A8U: *ORB UNL, ORB LD, END EFF, PL.*

ORB UNL. Orbiter unloaded mode uses the unloaded POR and defines the HC inputs to coincide with the desired arm trajectory as viewed out the aft windows. For example, to translate the arm to the left as you are looking out the aft window (toward the starboard side of the vehicle), the THC would be deflected to the left. To move the arm out of the payload bay (up), the THC would be deflected up. To bring the arm toward you, the THC would be pulled out. RHC inputs are similar. To pitch the arm or payload up with respect to you as you are looking out the aft window, the RHC would be tilted back toward you. To yaw the arm/payload as you are viewing it, the RHC would be twisted left or right about its long axis. To roll with respect to your view, the RHC would be deflected left and right.

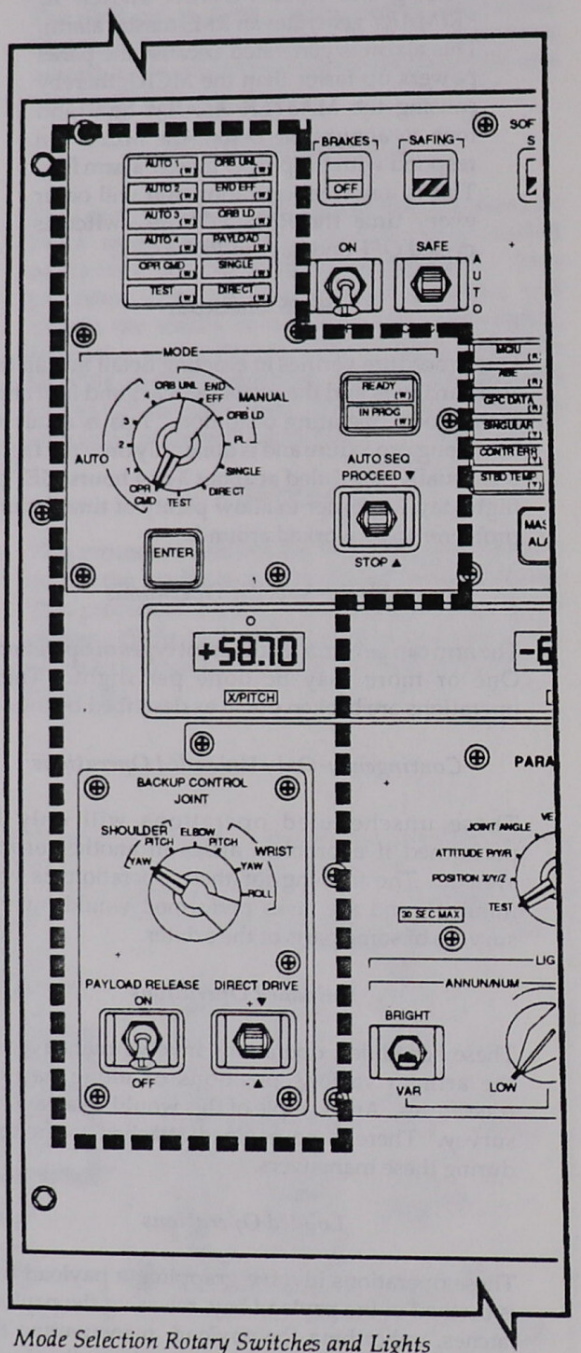

Mode Selection Rotary Switches and Lights on Panel A8U

ORB LD. Orbiter loaded mode is usually used for a loaded arm. The HC inputs in orbiter loaded mode are identical to those in *ORB UNL*; however, the POR is defined to be at a point within the grappled payload.

END EFF. End effector mode allows the HC inputs to reflect motion desired when viewed through the end effector camera. The sense the operator has is that he or she is "sitting" on the end of the end effector. When the arm is aligned parallel to the longeron, and the wrist joint angles are all zero, HC inputs in *END EFF* coincide with those in *ORB UNL/LD*. If the wrist is then pitched down in that configuration, the motion to take the arm down into the payload bay would be a THC downward deflection in *ORB UNL/LD*, but would be a push inward on the THC in *END EFF* mode.

PL. Payload mode uses the software-predefined POR and coordinate system and applies the HC inputs as follows: THC-in will cause motion in the +X axis of the software-defined PL coordinate system; THC-out corresponds to motion along the X axis of the PL coordinate system. THC-right will cause motion along the PL +Y axis, while THC-left will cause motion along the PL -Y axis. THC-down will cause motion along the PL +Z axis, and THC-up will cause motion in the PL -Z axis. RHC P will cause motion about the PL Y axis, RHC Y will cause rotation about the PL Z axis, and RHC R will cause rotation about the PL X axis.

TEST. Test mode, while not strictly speaking a manual-augmented mode, uses the same POR and coordinate system definition as *ORB UNL*. Test mode allows the arm operator to monitor and verify the HC commands without causing any arm motion. This is done by cutting off the joint drive current at each joint.

AUTO Modes

There are two types of auto modes: auto-commanded auto sequences and operator-commanded auto sequences. In either case, the SM GPC controls the arm trajectory.

Auto-Commanded Auto Sequences. These sequences consist of up to 200 pre-defined points that can be grouped in up to 20 sets, or sequences. To use an auto-commanded auto sequence, the operator enters the desired sequence number on the PDRS CONTROL SPEC for one of AUTO 1, 2, 3, or 4 slots, then selects *AUTO 1*, 2, 3, or 4 via the *MODE* rotary switch on panel A8U. The arm is then commanded to start via the *AUTO SEQ* switch, and will fly through that pre-defined trajectory.

Operator-Commanded Auto Sequences. For these, the arm operator must manually enter a desired POR end position and attitude via the PDRS CONTROL SPEC. The operator then selects *OPR CMD* mode via panel A8U and starts the sequence. The arm will fly from its current position to the desired end point and then stop. Should another sequence be desired, the operator would have to enter the new end point on the SPEC.

PDRS Caution and Warning Summary

- The RMS has a separate C/W matrix on panel A8U. This system is not associated with the orbiter's C/W system.
- The red *MCIU* light indicates that the MCIU has failed a self-test.
- The red *DERIGIDIZE* light indicates that the end effector has derigidized without command.
- The red *ABE* light indicates that a failure has occurred in the ABE of any joint.
- The red *RELEASE* light indicates that the end effector has released the grapple fixture without command.
- The red *GPC DATA* light indicates invalid data transmitted from the orbiter computer to the MCIU and detected by the MCIU BITE.
- The yellow *CHECK CRT* light indicates an RMS failure message is on the orbiter CRT.
- The yellow *CONTR ERR* light indicates the presence of abnormal conditions in an arm-joint that may not be detected by BITE and may cause a joint runaway (software automatically applies the brakes when such a condition occurs).
- The yellow *REACH LIM* light indicates that one of the joints is close to its travel limit.
- The yellow *PORT TEMP* light indicates that the temperature of the port arm has exceeded its predetermined caution threshold.
- The yellow *SINGULAR* light indicates that the arm is in one of three singularity configurations.
- The red *MASTER ALARM* signals the RMS operator that an RMS C/W light was activated. The light and tone are cancelled by depressing the push button.
- The RMS C/W tone volume may be adjusted by the *CAUTION/WARNING TONE VOLUME* knob.

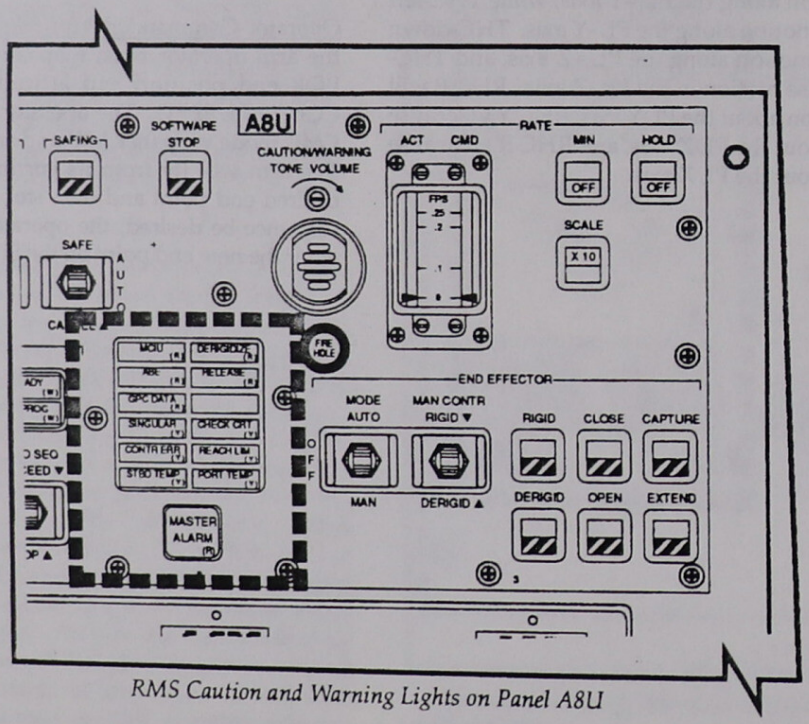

RMS Caution and Warning Lights on Panel A8U

PDRS Summary Data

- The PDRS is used to maneuver itself or an attached payload in orbit. It consists of the RMS, MPM, and MRLs, and interfaces with other orbiter systems such as the SM GPC, the PRLSs, and the CCTV.
- The RMS consists of the arm itself and the controls and interfaces needed to maneuver it. It is located on the port longeron.
- The MPM consists of the torque tube, the pedestals, the MRLs, and the jettison system. The MPM must be stowed whenever the payload bay doors are closed and must be deployed for any loaded operations.
- The pedestals contain the MRLs and the jettison electronics and mechanics and are the supports on which the RMS rests while it is cradled.
- The MRLs latch the arm to the MPM and restrain it during periods of RMS inactivity.
- The jettison allows the arm, the arm and pedestals, or the arm/payload combination to be non-impulsively separated from the orbiter if the arm cannot be cradled and stowed prior to payload bay door closure.
- The on-orbit arm operations fall into six categories: contingency-only unloaded operations, unloaded operations, loaded operations, deploy operations, retrieve operations, and deploy and retrieve operations.
- The arm has three basic modes of operation: single joint modes, manual-augmented modes, and auto modes.
- All RMS operations involve a two-person operator team. Each member is vital to the success of the mission.
- The PDRS controls are located primarily on panels A8L, A8U, and A6U. Other panels that affect the RMS are MA73C, ML86B, A14, A7U, and R13.
- The major PDRS CRT display is PDRS CONTROL, SPEC 94. PDRS OVERRIDE SPEC 95, and PDRS STATUS DISP 96, also control and monitor the RMS. DISP 97, PL RETENTION, monitors payload status.

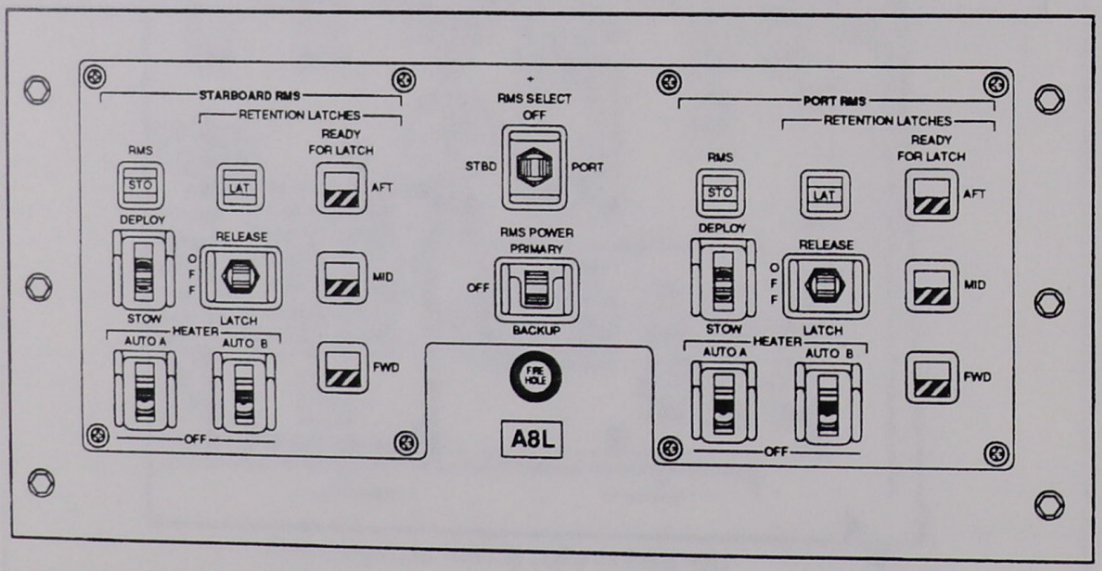
STARBOARD RMS
RETENTION LATCHES
RMS
STO
LAT
READY FOR LATCH
AFT
MID
FWD
DEPLOY
RELEASE
OFF
STOW
LATCH
HEATER
AUTO A
AUTO B
OFF
RMS SELECT
OFF
STBD
PORT
RMS POWER
PRIMARY
OFF
BACKUP
FIRE HOLE
A8L
PORT RMS
RETENTION LATCHES
RMS
STO
LAT
READY FOR LATCH
AFT
MID
FWD
DEPLOY
RELEASE
OFF
STOW
LATCH
HEATER
AUTO A
AUTO B
OFF

Panel A8L

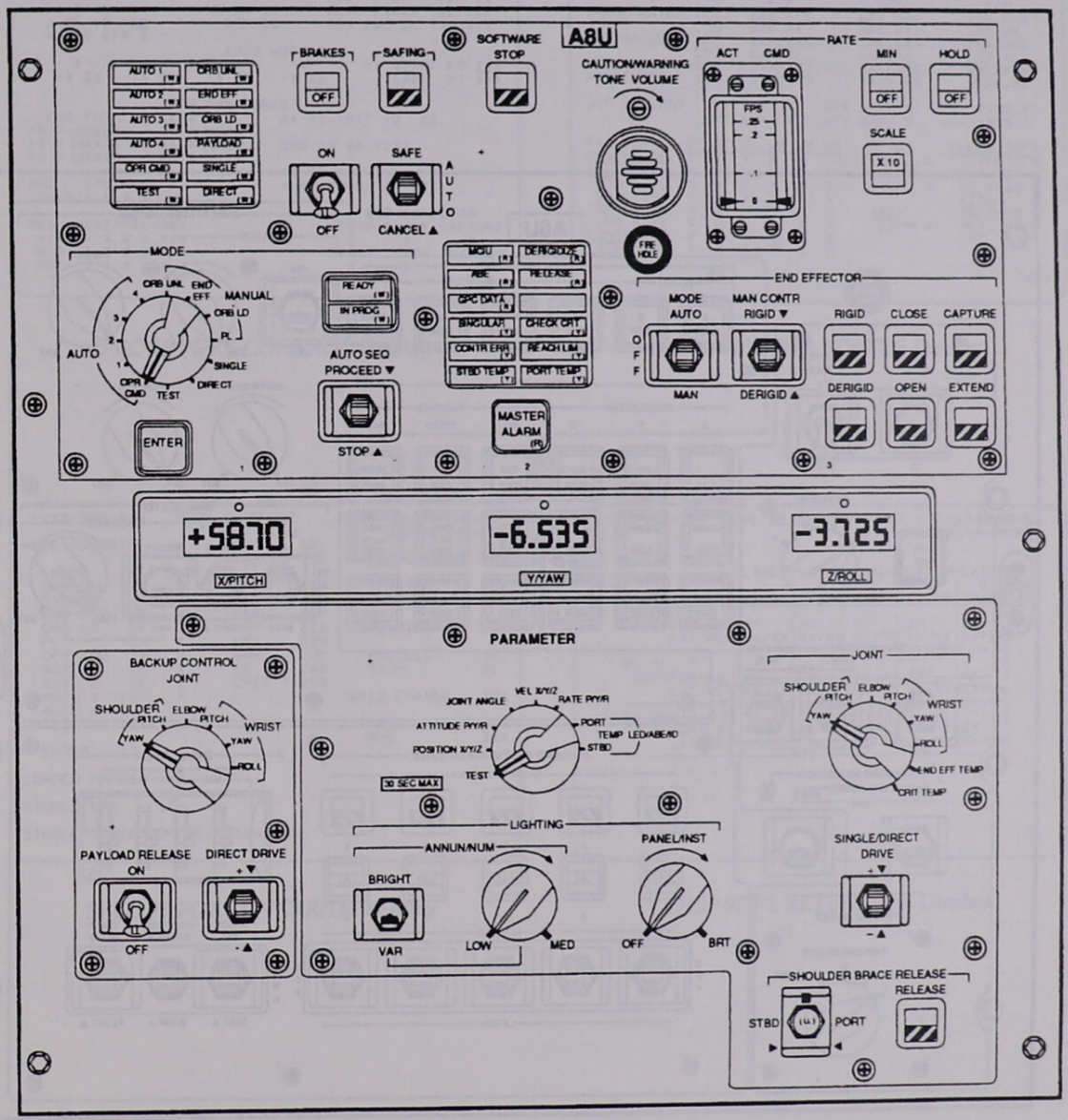
A8U
SOFTWARE STOP
BRAKES
SAFING
OFF
ON
SAFE
OFF
CANCEL
AUTO
CAUTION/WARNING TONE VOLUME
RATE
ACT
CMD
MIN
HOLD
SCALE
X10
FPS
MODE
MANUAL
AUTO
ENTER
READY
IN PROG
AUTO SEQ PROCEED
STOP
MASTER ALARM
END EFFECTOR
MODE AUTO
MAN CONTR RIGID
MAN
DERIGID
RIGID
CLOSE
CAPTURE
DERIGID
OPEN
EXTEND
+58.70
-6.535
-3.725
X/PITCH
Y/YAW
Z/ROLL
PARAMETER
BACKUP CONTROL JOINT
SHOULDER PITCH
ELBOW PITCH
WRIST YAW
WRIST ROLL
PAYLOAD RELEASE
ON
OFF
DIRECT DRIVE
JOINT ANGLE
ATTITUDE PY/R
POSITION X/Y/Z
VEL X/Y/Z
RATE PY/R
PORT TEMP
STBD TEMP
LED/ABE/ID
TEST
30 SEC MAX
LIGHTING
ANNUN/NUM
BRIGHT
VAR
LOW
MED
PANEL/INST
OFF
BRT
JOINT
END EFF TEMP
CRIT TEMP
SINGLE/DIRECT DRIVE
SHOULDER BRACE RELEASE
RELEASE
STBD
PORT

Panel A8U

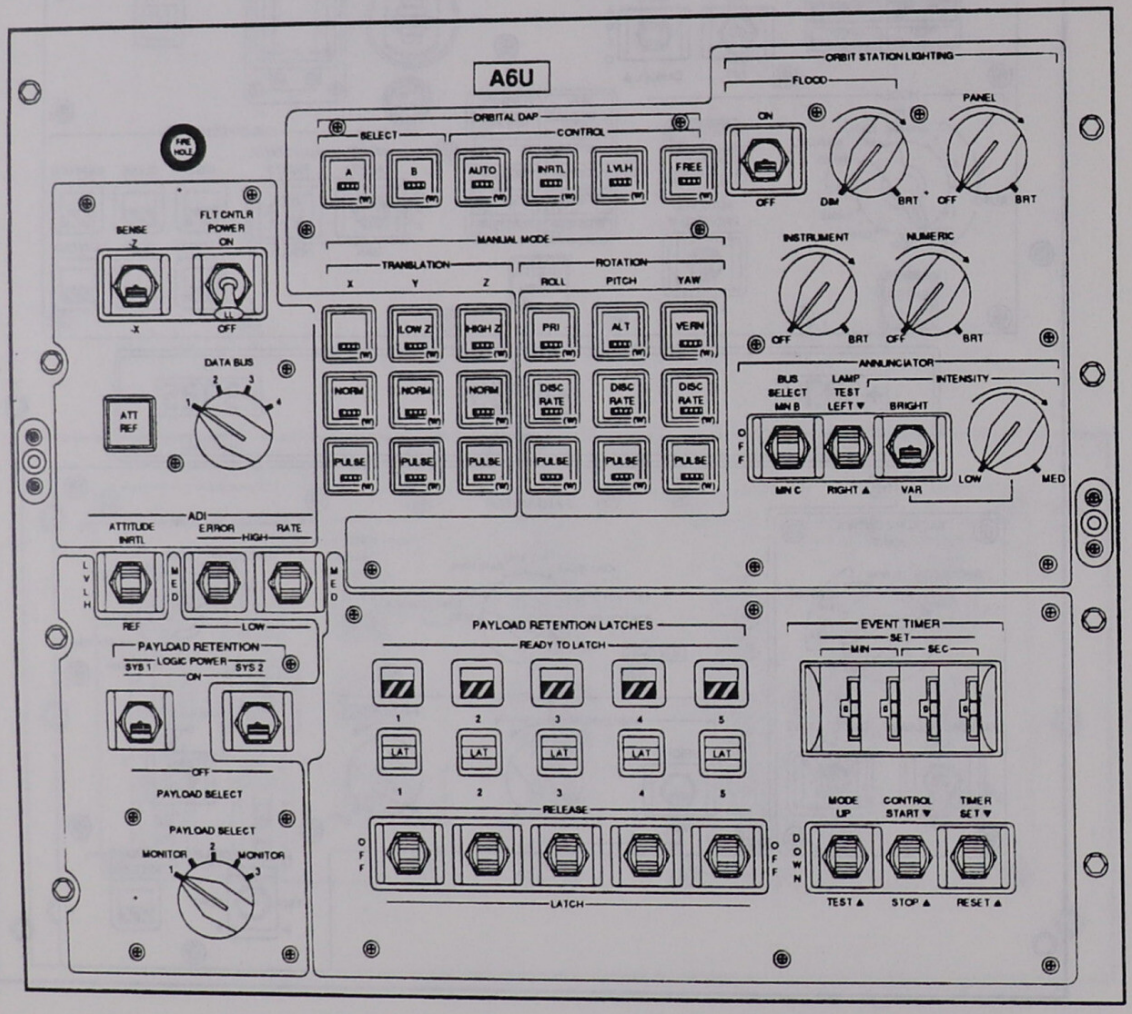
A6U
ORBIT STATION LIGHTING
FLOOD
ON
OFF
DIM
BRT
PANEL
ORBITAL DAP
SELECT
CONTROL
A
B
AUTO
INRTL
LVLH
FREE
MANUAL MODE
TRANSLATION
ROTATION
X
Y
Z
ROLL
PITCH
YAW
LOW Z
HIGH Z
PRI
ALT
VERN
NORM
DISC RATE
PULSE
INSTRUMENT
NUMERIC
ANNUNCIATOR
BUS SELECT MIN B
LAMP TEST LEFT
BRIGHT
INTENSITY
MIN C
RIGHT
VAR
LOW
MED
FLT CNTLR POWER ON
SENSE
DATA BUS
ATT REF
ADI
ATTITUDE INRTL
ERROR
RATE
HIGH
REF
PAYLOAD RETENTION
LOGIC POWER
SYS 1
SYS 2
PAYLOAD SELECT
MONITOR
PAYLOAD RETENTION LATCHES
READY TO LATCH
LAT
RELEASE
LATCH
EVENT TIMER
SET
MIN
SEC
MODE UP
CONTROL START
TIMER SET
TEST
STOP
RESET

Panel A6U

```
XXXX/094/          PDRS CONTROL     XX X DDD/HH MM SS
                                          DDD/HH:MM SS
RMS SEL  XXXX    RMS PWR XXX                 ENA INH
    PORT  1X                    SOFT STOP   7X  8X
    STBD  2X      I/O ON 5X     AUTO BRAKE  9X 10X
  3 PL ID  XX       OFF 6X      POS ENC CK 11X 12X
  4 END EFF X
                  AUTO MODES
    1        2        3        4        17 START PT XXX
   13 XX    14 XX    15 XX    16 XX        LAST PT XXX

                OPR CMD MODES
  END POS         END ATT      24 PL INIT ID  XX
18 X ±XXXXX     21 P ±XXX
19 Y ±XXXX      22 Y ±XXX      CMD CK 25 XXXX
20 Z ±XXXX      23 R ±XXX
                               26 WR RANGE X
RMS   STO/DPLY                 AUTO BRAKE CK 27X
 SHLD X X X X
                                   END EFFECTOR
RMS   LAT/REL/RDY              RIGID CLOSE CAPTURE
 AFT  X X X X X X                X     X      X
 MID  X X X X X X              DERIG  OPEN  EXTEND
 FWD  X X X X X X                X     X      X
                                                (XX)
```

SPEC 94 PDRS CONTROL Display

```
XXXX/XXX/096       PDRS STATUS      XX X DDD/HH:MM:SS
                                          DDD/HH:MM:SS
RMS SEL: XXXX
                          X/P          Y/Y          Z/R
TRANS RATES ACT      ±XX.XXS      ±XX.XXS      ±XX.XXS
            CMD      ±XX.XX       ±XX.XX       ±XX.XX
ROT RATES   ACT      ±XX.XXS      ±XX.XXS      ±XX.XXS
            CMD      ±XX.XX       ±XX.XX       ±XX.XX
POSITIONS   ACT      ±XXXXXS      ±XXXXXS      ±XXXXXS
ATTITUDES   ACT      ±XXX.XS      ±XXX.XS      ±XXX.XS

JNT ANGLES: SY: ±XXX.X   SP: ±XXX.X   EP: ±XXX.X
            WP: ±XXX.X   WY: ±XXX.X   WR: ±XXX.X

FAULTS:  SY SP EP WP WY WR     MCIU:        CHECK CRT:
REACH LIM X  X  X  X  X  X      MADC X       DC/MCIU X
ABE- TACH X  X  X  X  X  X      MCPC X       EXT FS  X
 RDA BITE X  X  X  X  X  X      ICF  X       EE FLAG X
 SPA +28V X  X  X  X  X  X                   EEEU    X
 SPA COMM X  X  X  X  X  X      ABE:         EE CMDS X
 JPC BITE X  X  X  X  X  X       COMM X      MCIU HC X
CONTR ERR X  X  X  X  X  X                   TMP CKT X
CKCRT-POS X  X  X  X  X  X
                                                (XX)
```

DISP 96 PDRS STATUS Display

```
XXXX/095/XXX   PDRS OVERRIDE    XX X DDD/HH:MM:SS
                                      DDD/HH:MM:SS
MODE OVERRIDE  1X   JOINT      SEL
                    OVERRIDE   17X   RATE OVERRIDE 26X
  MODE      SEL IND
 ORB UNL    2X  X     SHY     18X     VERNIER    27X
 SINGLE     3X  X     SHP     19X     COARSE     28X
 END EFF    4X  X     ELP     20X
 ORB LD     5X  X     WRP     21X   AUTO OVERRIDE 29X
 PL         6X  X     WRY     22X
 OPR CMD    7X  X     WRR     23X     PROCEED    30
 AUTO 1     8X  X     EE T    24X     STOP       31
 AUTO 2     9X  X     CRIT T  25X
 AUTO 3    10X  X                   AXIS CHANGE  32X
 AUTO 4    11X  X
 TEST      12X  X                     THC        33X
                                      RHC        34X
 ENTER     13

LOADED RATES  14X

STOWED OPS    15X

SINGLE/DIRECT DR REASSIGN 16X
                                                (XX)
```

SPEC 95 PDRS OVERRIDE Display

```
XXXX/XXX/097    PL RETENTION     XX X DDD/HH:MM:SS
                                      DDD/HH:MM:SS
                 LATCH 1   LATCH 2   LATCH 3   LATCH 4   LATCH 5
                 AB/AB     AB/AB     AB/AB     AB/AB     AB/AB
PL SEL 1
 RDY-FOR-LAT     XX        XX        XX        XX        XX
     LAT/REL     XX/XX     XX/XX     XX/XX     XX/XX     XX/XX
PL SEL 2
 RDY-FOR-LAT     XX        XX        XX        XX        XX
     LAT/REL     XX/XX     XX/XX     XX/XX     XX/XX     XX/XX
PL SEL 3
 RDY-FOR-LAT     XX        XX        XX        XX        XX
     LAT/REL     XX/XX     XX/XX     XX/XX     XX/XX     XX/XX

                                                (XX)
```

DISP 97 PL RETENTION Display

PDRS Rules of Thumb

- Whenever there are both talkbacks and CRT displays that reflect microswitch status, they should ALWAYS both be checked during any operation affecting them.
- Whenever troubleshooting RMS malfunctions in the long-form MAL book, always READ AHEAD. The MALs have a knack for having page breaks in extremely bad locations, and if you don't know what you're supposed to look for before you turn the page, you could be in trouble.
- The hand controllers are rate-proportional and are extremely sensitive. They should be held in such a way that you can control the full range of inputs without ever stopping to rearrange your hand. Care must be taken to not overcontrol the inputs. A good practice is to slowly and steadily input a desired command, wait patiently until you see the reactions of that command on the arm, and as the desired motion is achieved, slowly back off the input. Ideally, you should reach the axis detent at the same time the arm achieves the desired position and attitude.
- MPM motion may cease during deployment or stowage before the expected microswitches are made. This is due to the fact that the last part of travel in either direction is when the overcenter lock is locking. Therefore, don't turn off the *PORT RMS* switch when visible motion stops. Wait for the microswitches.
- Practice safety habits, the most important of which are brakes on, then power off (if required) for abnormal joint response and use EE CC for abnormal EE ops during the specified conditions.
- During arm cradling, periodically check all joint angles to make sure that joints that you have already aligned to 0 have not moved. During soft stop, position hold does not work; therefore, external forces can move joints out of desired alignment.
- CCTV cameras have a tendency to malfunction at the most inconvenient times. Expect this and know how to perform all operations without cameras.
- Develop a scan pattern that encompasses window, CCTV, and panel status.
- Never rotate the *MODE* switch through *DIRECT* while the brakes are on. This actually puts the arm in mode, and sets you up for a possible runaway if a *SINGLE/DIRECT DRIVE* switch failure occurs or is present.
- Verify the *RATE* switch setting by feel and talkback status. This should be done EVERY TIME prior to moving the arm, regardless of mode.
- Make sure you know the proper definitions of "cradling," "stowing," and "berthing."
- Rates for berthing/unberthing: Usually maintain rates at about 0.4 to 0.5 ft/sec between Z = 414 and -438. For Z < -438 (away from the bay), rates can be increased somewhat.
- For berthing or unberthing of payloads with keel trunnions: the keel pin enters/exits the AKA when the longeron trunnions are at the top of the built-in 8-inch PRLA guides.

2.20 REACTION CONTROL SYSTEM (RCS)

CONTENTS

Description 2.20-1
Jet System 2.20-3
Propellant System 2.20-5
Helium System 2.20-10
Thermal Control 2.20-12
RCS Redundancy Management 2.20-14
Operations 2.20-18

Description

The orbiter's reaction control system (RCS) consists of forward and aft systems of control jets, propellant storage tanks, and distribution networks located in three separate vehicle modules: forward, left, and right. The forward module is contained in the nose area, forward of the cockpit windows. The left and right (aft) modules are collocated with the orbital maneuvering system (OMS) in the left and right OMS/RCS pods near the tail of the vehicle. Each RCS consists of high-pressure gaseous helium storage tanks, pressure regulation and relief systems, a fuel and oxidizer tank, a propellant distribution system, reaction control jets, and electrical jet and pod heaters.

The RCS units provide propulsive forces from a collection of jet thrusters to control the motion of the orbiter. Each jet is permanently fixed to fire in a general direction: up, down, left,

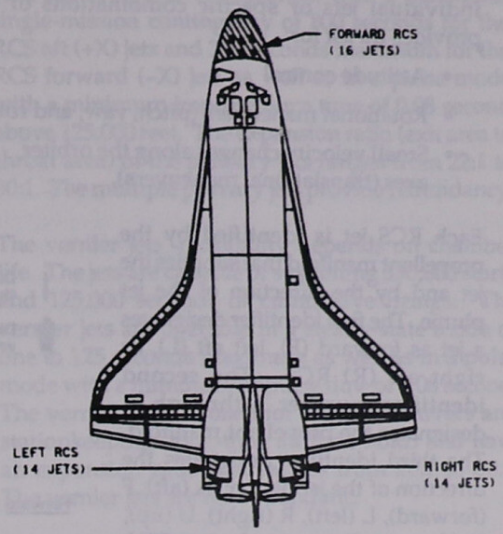

Forward, Left, and Right RCS Modules

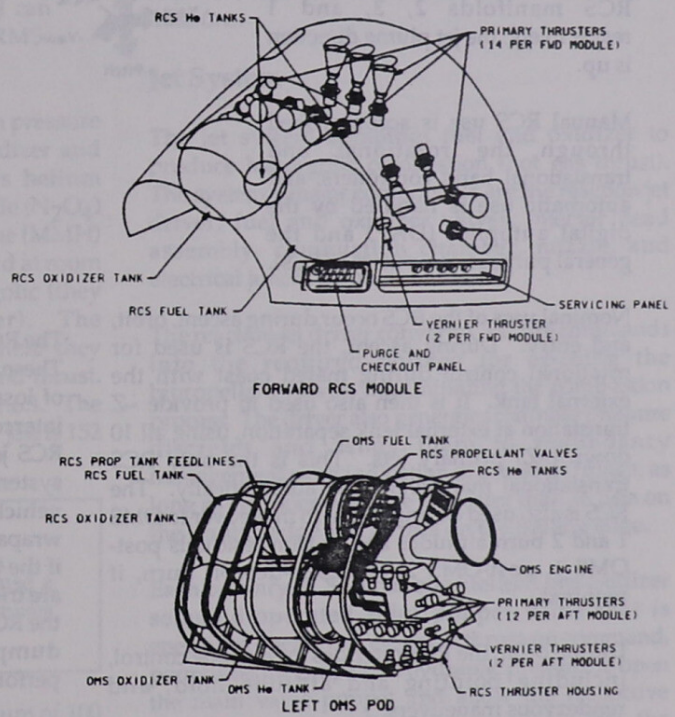

Left and Forward RCS Modules

right, forward, or aft. The selective firing of individual jets or specific combinations of jets provides thrust for:

- Attitude control
- Rotational maneuvers (pitch, yaw, and roll)
- Small velocity changes along the orbiter axes (translational maneuvers).

Each RCS jet is identified by the propellant manifold that supplies the jet and by the direction of the jet plume. The first identifier designates a jet as forward (F), left aft (L), or right aft (R) RCS. The second identifier, number 1 through 5, designates the propellant manifold. The third identifier designates the direction of the jet plume: A (aft), F (forward), L (left), R (right), U (up), D (down). For example, jets F2U, F3U, and F1U are forward RCS jets receiving propellants from forward RCS manifolds 2, 3, and 1 respectively; the jet plume direction is up.

Manual RCS use is accomplished through the rotational and translational hand controllers, and automatic use is handled by the digital autopilot (DAP) and the general purpose computers (GPCs).

Nominal uses of the RCS occur during ascent, orbit, and entry. During ascent, the RCS is used for rotational control during mated coast with the external tank. It is then also used to provide –Z translation at external tank separation, using all 10 down (–Z) primary jets. This is the only RCS translational maneuver done automatically. The RCS is also used during ascent to maneuver to OMS 1 and 2 burn attitudes and to trim residuals post-OMS 1, post-OMS 2, and post-deorbit burn, if required.

During orbit, the RCS provides for attitude control, including pointing and attitude hold, and rendezvous maneuvers.

During entry, the RCS provides for center of gravity (c.g.) management through the forward propellant dump. Specific functions are decreasing landing weight, controlling the center of gravity, and reducing OMS/RCS tank structural loads at touchdown. Also during entry, yaw, roll, and pitch control is provided by the aft left/right (Y) and up/down (Z) jets. Some flights provide for the experimental use of some forward jets during entry.

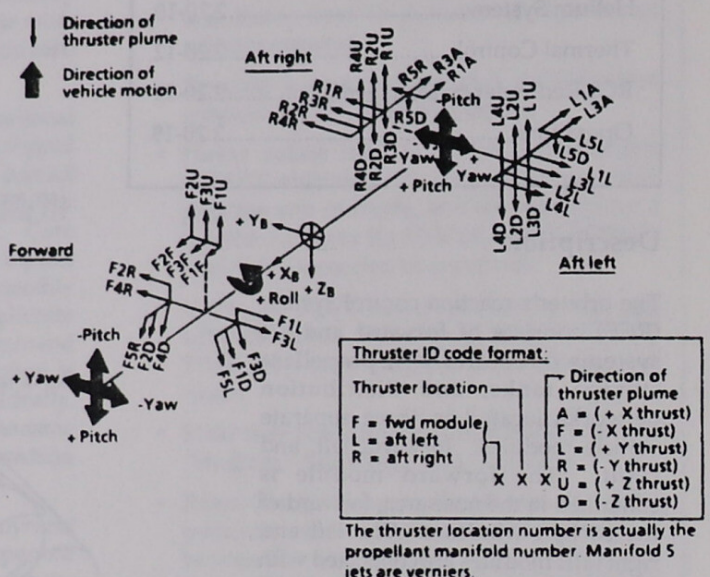

RCS Jet Identification

The RCS is also used during off-nominal situations. These include single-engine roll control; in the case of loss of two SSMEs on ascent, the OMS-to-RCS interconnect is automatically commanded, and the RCS jets control the roll. If the OMS gimballing system is not performing adequately to control vehicle attitude during an OMS burn, an RCS wraparound is used. The RCS is also used manually if the OMS fails prematurely. The aft (+X) RCS jets are tried first, but others can be used. During aborts, the RCS may be used to assist with ascent propellant dumps to decrease vehicle weight, improve performance, and control center of gravity.

NOTE

RCS jets assist in OMS and/or RCS dumps by burning propellant in either propulsive or non-propulsive (null) burns.

The RCS totals 44 jets: 38 primary and six vernier. The vernier jets are only used on orbit for fine attitude control. The forward RCS has 14 primary and two side-firing vernier jets. The aft RCS has 12 primary and two vernier jets in each pod for a total of 28. One set of aft vernier jets is side-firing, and the other set is down-firing. The primary RCS jets provide 870 pounds of vacuum thrust each, and the vernier RCS jets provide 24 pounds of vacuum thrust each for precise maneuvering. The vernier jets are used for right attitude dead bands and fuel conservation.

NOTE

The loss of one down-firing vernier jet results in the loss of the entire vernier mode due to the loss of control authority. If one side-firing vernier jet is lost, control can be maintained, except for some RMS-loaded operations.

Two helium tanks supply gaseous helium pressure to the oxidizer and fuel tanks. The oxidizer and fuel are then supplied under gaseous helium pressure to the RCS jets. Nitrogen tetroxide (N_2O_4) is the oxidizer, and monomethyl hydrazine (MMH) is the fuel. The propellants are toxic, liquid at room temperature, Earth-storable, and hypergolic (they ignite upon contact with each other). The propellants are supplied to the jets, where they atomize, ignite, and produce a hot gas and thrust. The oxidizer-to-fuel ratio for each jet is 1.6:1. The nominal chamber pressure of the primary jets is 152 psia. For each vernier jet, it is 110 psia.

CAUTION

On-orbit leak of MMH fuel may cause a module fire on entry when MMH mixes with atmospheric oxygen.

The primary jets are reusable for a minimum of 100 missions and are capable of sustaining 20,000 starts and 12,800 seconds of cumulative firing. The primary jets are operable in a maximum steady-state mode of 1 to 150 seconds, with a maximum single-mission contingency of 800 seconds for the RCS aft (+X) jets and 300 seconds maximum for the RCS forward (–X) jets as well as in a pulse mode with a minimum impulse burn time of 0.08 second above 125,000 feet. The expansion ratio (exit area to throat area) of the primary jets ranges from 22:1 to 30:1. The multiple primary jets provide redundancy.

The vernier jets' reusability depends on chamber life. The jets are capable of sustaining 330,000 starts and 125,000 seconds of cumulative firings. The vernier jets are operable in a steady-state mode of one to 125 seconds maximum as well as in a pulse mode with a minimum impulse time of 0.08 second. The vernier jets are used for finite maneuvers and stationkeeping (long-time attitude hold) and have an expansion ratio that ranges from 20:1 to 50:1. The vernier jets are not redundant.

The forward RCS module and OMS/RCS pods can be removed to facilitate orbiter turnaround, if required, and are reusable for a minimum of 100 missions.

Jet System

The jet system combines fuel and oxidizer to produce hypergolic combustion (hot gas thrust). The system's major components are the reaction jet driver, fuel and oxidizer valves, injector head assembly, combustion chamber, nozzle, and electrical junction box.

The reaction jet driver converts GPC fire commands into the required voltage for opening the bipropellant valves, thus initiating the combustion process. The driver also generates chamber pressure discretes and sends them to redundancy management as an indication of actual jet firings, as long as chamber pressure is greater than 36 psia on the leading edge and 26 psia on the trailing edge.

Each primary RCS jet has one fuel and one oxidizer solenoid-operated pilot poppet valve that is energized open by an electrical thrust-on command, permitting the propellant hydraulic pressure to open the main valve poppet and allow the respective propellant to flow through the injector into the

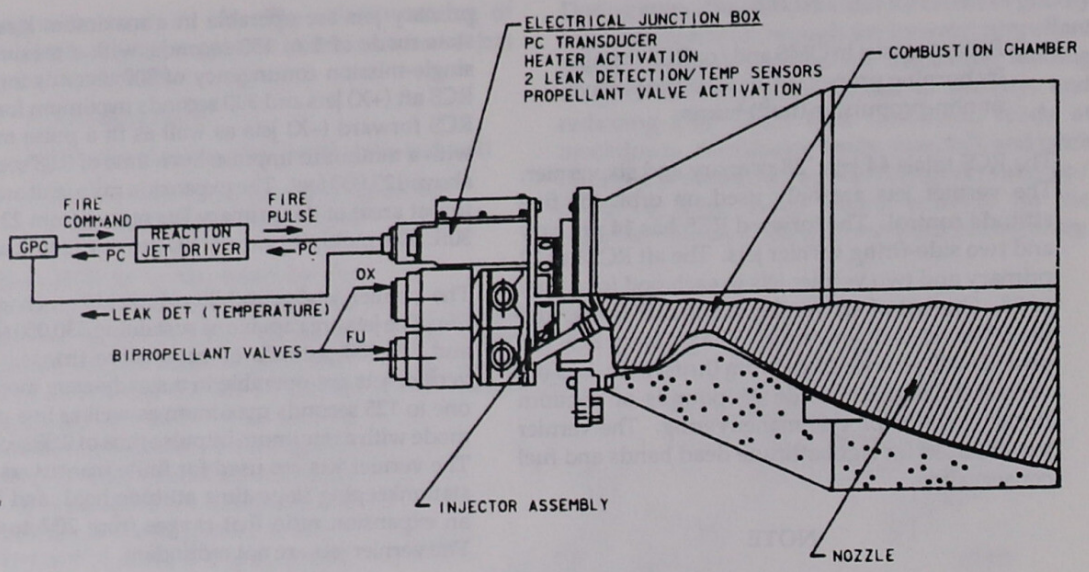

Primary Jet

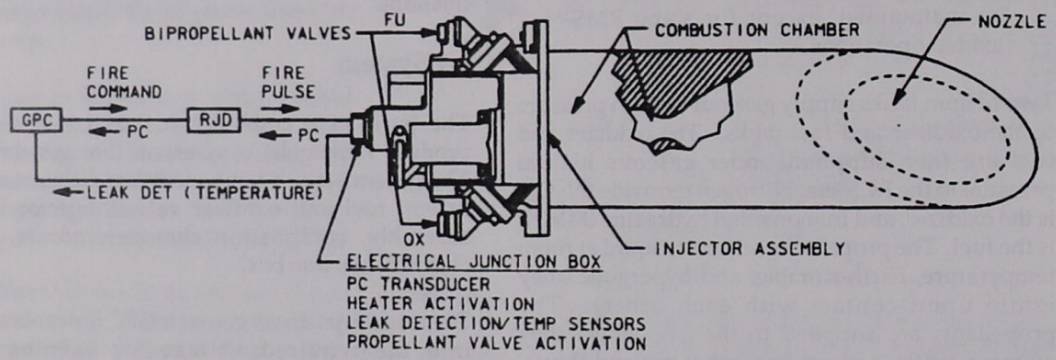

Vernier Jet

combustion chamber. When the thrust-on command is terminated, the valves are deenergized and closed by spring and pressure loads.

Each vernier RCS jet has one fuel and one oxidizer solenoid-operated poppet valve. The valves are energized open by an electrical thrust-on command. When the thrust-on command is terminated, the valves are de-energized and closed by spring and pressure loads.

The injector assembly directs the flow of propellants to the combustion chamber. The primary thrusters have injector hole pairs (one fuel, one oxidizer), called doublets, canted toward each other for stream impingement of the propellants in the combustion chamber. Each primary jet has 84 doublets arranged in a "showerhead" circular pattern at the combustion chamber. Additional fuel holes are provided near the outer edge of the injector assembly for cooling the combustion chamber walls.

Each of the six vernier RCS jets has a single pair of fuel and oxidizer injector holes canted to cause impingement of the fuel and oxidizer streams for combustion.

The combustion chamber of each RCS jet is constructed of columbium with a columbium disilicide coating to prevent oxidation. The nozzle of each RCS jet is tailored to match the external contour of the forward RCS module or the left and right aft RCS pods. The nozzle is radiation-cooled, and insulation around the combustion chamber and nozzle prevents the excessive heat of 2,000° to 2,400° F from radiating into the orbiter's structure.

The electrical junction box for each RCS jet has electrical connections for an electrical heater, a chamber pressure transducer, oxidizer and fuel injector temperature transducers (to detect propellant leaks) for each valve, and the propellant valves.

There is a small possibility of random but infrequent combustion instability of the primary RCS jets, causing a burnthrough in the combustion chamber wall of an RCS primary jet in a very few seconds. An instability protection system is incorporated into each of the 38 primary RCS jets. The electrical power wire of each primary RCS jet fuel and oxidizer valve is wrapped around the outside of each primary RCS jet combustion chamber wall. If instability occurs within a primary RCS jet, the burnthrough would cut the electrical power wire to that primary RCS jet's valves, remove electrical power to the valves, close the valves, and render the jet inoperative for the remainder of the mission.

Propellant System

The system that distributes the propellants to the RCS jets consists of fuel and oxidizer tanks, tank isolation valves, manifold isolation valves, crossfeed valves, distribution lines, and filling and draining service connections.

Propellant Tanks

Each RCS module contains two 39-inch-diameter spherical titanium propellant tanks, one for fuel and one for oxidizer. The dry weight of the forward tanks is 70.4 pounds. The dry weight of the aft tanks is 77 pounds. The nominal full load of the forward and aft RCS tanks in each pod is 1,464 pounds in the oxidizer tanks and 923 pounds in the fuel tanks.

Each tank is pressurized with helium, which expels the propellant into an internally mounted, surface-tension, propellant acquisition device that acquires and delivers the propellant to the RCS jets. The propellant acquisition device is required because of the orbiter's orientation during ascent, on orbit, and during entry. The device is also needed because of the omnidirectional acceleration spectrum, which ranges from very high during ascent, entry, or abort to very low during orbital operation. The forward RCS propellant tanks have propellant acquisition devices designed to operate primarily in a low-gravity environment, whereas the aft RCS propellant tanks are designed to operate in both high and low gravity, ensuring propellant and pressurant separation during tank operation.

A compartmental tank with individual wire mesh screen devices in both the upper and lower compartments supplies propellant independent of tank load or orientation. The devices are constructed of stainless steel and are mounted in the titanium tank shells. A titanium barrier separates the upper and lower compartments in each tank.

During external tank separation and orbital operations, propellant flows from the upper compartment bulk region, into the channel network, to the upper compartment transfer tube, and into the lower compartment bulk region. Flow continues from the upper compartment until gas is ingested into the upper compartment device and transferred to the lower compartment.

The aft RCS propellant tanks' lower compartment is not used on orbit, but it is required for entry. The aft RCS tank propellants are positioned approximately 100 degrees from the tank outlet because of the influence of acceleration up to 2.5 g. As the acceleration builds, the channel screen in the ullage area (area occupied by gases) of both devices breaks down and ingests gas. As entry expulsion continues, propellant is withdrawn from the lower compartment until a 96.5-percent expulsion efficiency is achieved.

The aft RCS propellant tanks incorporate an entry collector, sumps, and gas traps to ensure proper operation during abort and entry mission phases. Because of these components, the aft RCS propellant tanks are approximately 7 pounds heavier than the forward RCS propellant tanks.

The left, forward, and right RCS fuel and oxidizer tank ullage pressures (pressures within an RCS propellant tank used for expelling propellant and calculating propellant volume) can be monitored on panel O3. When the left-hand rotary switch on panel O3 is positioned to *RCS PRPLT*, the pressures are displayed on the three RCS/OMS/PRESS meters. The *LEFT RCS*, *FWD RCS*, or *RIGHT RCS* red caution and warning light on panel F7 will illuminate if a module's tank ullage pressure is less than 200 psia or higher than 300 psia.

RCS Propellant Quantity

The RCS quantity monitor uses the GPC to calculate the usable percent of fuel and oxidizer in each RCS module. The quantities are computed based on the pressure, volume, and temperature method, which requires that pressure and temperature measurements be combined with a unique set of constants to calculate the percent remaining in each of the six propellant tanks. Correction factors are included for residual tank propellant at depletion, gauging inaccuracy, and trapped line propellant. The computed quantity represents the usable (rather than total) quantity for each module and makes it possible to determine if the difference between each pair of tanks exceeds a preset tolerance (leak detection).

The calculations include effects of helium gas compressibility, helium pressure vessel expansion at high pressure, oxidizer vapor pressure as a function of temperature, and oxidizer and fuel density as a function of temperature and pressure. The sequence assumes that helium flows to the propellant tanks to replace propellant leaving. As a result, the computed quantity remaining in a propellant tank will be decreased by normal usage, propellant leaks, or helium leaks.

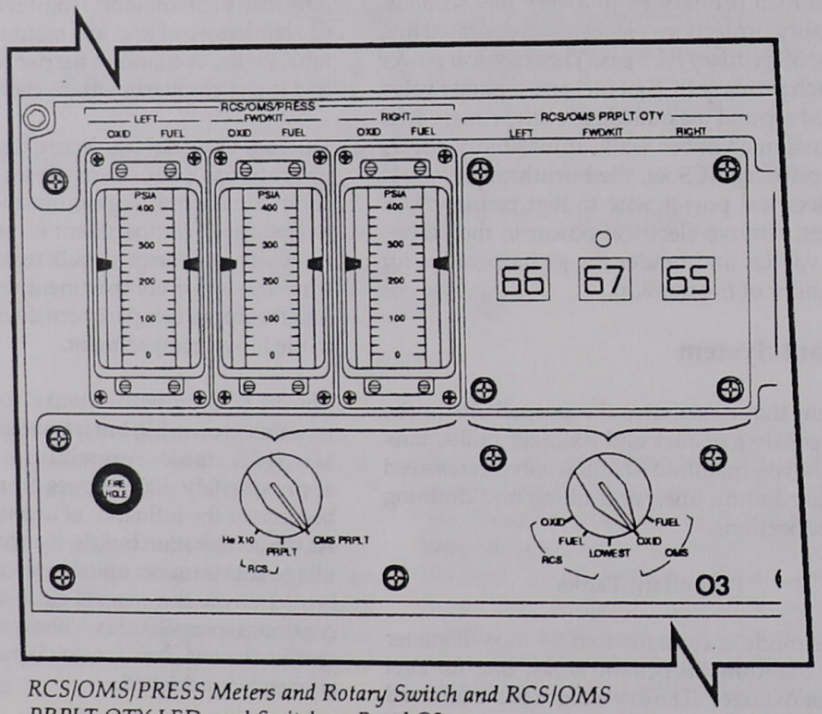

RCS/OMS/PRESS Meters and Rotary Switch and RCS/OMS PRPLT QTY LEDs and Switch on Panel O3
(Note: Information on these meters is from a different source than the information on PASS GNC SYS SUMM 2.)

NOTE

Erroneous temperature and/or pressure transducer readings will cause erroneous propellant quantity calculations.

The left, right, and forward RCS fuel and oxidizer quantities are displayed to the flight crew by the RCS/OMS PRPLT QTY LEDs on panel O3. When the rotary switch on panel O3 below the LEDs is positioned to the *RCS FUEL* or *OXID* position, the LEDs will indicate, in percent, the amount of fuel or oxidizer. If the switch is positioned to *RCS LOWEST*, the gauging system selects whichever is lower (fuel or oxidizer) for display on the LED.

The left, right, and forward RCS quantities also are sent to the DISP 19 PASS GNC SYS SUMM 2 CRT (RCS L QTY, R QTY, FWD QTY), and in the event of failures, substitution of alternate measurements and the corresponding quantity will be displayed. If no substitute is available, the quantity calculation for that tank is suspended with a fault message.

The sequence also provides automatic closure of the high-pressure helium isolation valves on orbit when the propellant tank ullage pressure is above 300 psia. When the tank ullage pressure returns below these limits, the close command is removed.

Exceeding a preset absolute difference of 9.5 percent between the fuel and oxidizer propellant masses will illuminate the respective *LEFT RCS*, *RIGHT RCS*, or *FWD RCS* red caution and warning light on panel F7, activate the *BACKUP C/W ALARM*, and cause a fault message to be sent to the CRT. A bias of 9.5 percent is added when a leak is detected so that subsequent leaks in that same module may be detected in the PASS. BFS will annunciate a leak only once.

Tank Isolation Valves

The valves located between the propellant tanks and the manifold isolation valves isolate the propellant tanks from the remainder of the propellant distribution system. The isolation valves are ac-motor-operated and consist of a lift-off ball flow control device and an actuator assembly that contains a motor, gear train, and actuator gear. One pair of valves (one fuel and one oxidizer) isolates the propellant tanks from the 1/2 manifold (manifolds are referenced by number: 1/2/3/4/5) in the forward and aft left and right RCS. One pair of valves isolates the propellant tanks from the 3/4/5 manifold in the forward RCS. Two pairs of valves, in parallel, identified as A and B, isolate the propellant tanks from the 3/4/5 manifold in the aft left and right RCS.

XXXX/XXX/019 GNC SYS SUMM 2 XX X DDD/HH:MM:SS DDD/HH:MM:SS

OMS AFT QTY L R

OXID	XX.XS	XX.XS
FU	XX.XS	XX.XS

OMS L R

TK P	HE	XXXXS	XXXXS
	OXID	XXXS	XXXS
	FU	XXXS	XXXS
N2 TK	P	XXXXS	XXXXS
REG	P	XXXS	XXXS
P	VLV	XXS	XXS
ENG IN	P		
	OXID	XXXS	XXXS
	FU	XXXS	XXXS
VLV	1	XXXS	XXXS
	2	XXXS	XXXS

RCS			OXID	FU	JET FAIL	ISOL VLV
FWD	HE	P	XXXXS	XXXXS		
	TK	P	XXXS	XXXS		
	QTY		XXXS	XXXS		
MANF	1	P	XXXS	XXXS	XXX	XXS
	2	P	XXXS	XXXS	XXX	XXS
	3	P	XXXS	XXXS	XXX	XXS
	4	P	XXXS	XXXS	XXX	XXS
	5				XXX	XXS
AFT L	HE	P	XXXXS	XXXXS		
	TK	P	XXXS	XXXS		
	QTY		XXXS	XXXS		
MANF	1	P	XXXS	XXXS	XXX	XXS
	2	P	XXXS	XXXS	XXX	XXS
	3	P	XXXS	XXXS	XXX	XXS
	4	P	XXXS	XXXS	XXX	XXS
	5				XXX	XXS

		OXID	FU	JET FAIL	ISOL VLV
HE	P	XXXXS	XXXXS		
R TK	P	XXXS	XXXS		
QTY		XXXS	XXXS		
1	P	XXXS	XXXS	XXX	XXS
2	P	XXXS	XXXS	XXX	XXS
3	P	XXXS	XXXS	XXX	XXS
4	P	XXXS	XXXS	XXX	XXS
5				XXX	XXS
					(XX)

DISP 19 PASS GNC SYS SUMM 2 Display

The forward RCS tank isolation valves are controlled by the *FWD RCS TANK ISOLATION 1/2* and *3/4/5* switches on panel O8. The aft left RCS tank isolation valves are controlled by the *AFT LEFT RCS TANK ISOLATION 1/2* and *3/4/5 A* and *B* switches on panel O7, and the aft right tank isolation valves are controlled by the *AFT RIGHT RCS TANK ISOLATION 1/2* and *3/4/5 A* and *B* switches on panel O7. These permanent-position switches have three settings: *OPEN*, *GPC*, and *CLOSE*.

When the *FWD RCS TANK ISOLATION 1/2* and *3/4/5* switches on panel O8 are positioned to *GPC*, that pair of valves is automatically opened or closed upon command from the orbiter computer. When the corresponding pair of valves is opened, fuel and oxidizer from the propellant tanks are allowed to flow to the corresponding manifold isolation valves. Electrical power is provided to an electrical motor controller assembly that supplies power to the ac-motor-operated valve actuators. Once the valve is in the commanded position, logic in the motor controller assembly removes power from the actuator.

Microswitches in each pair of valves control talkback indicators above each tank's isolation switch on panel O8. The talkback indicator shows *OP* or *CL* when that pair of valves is open or closed and barberpole when the valves are in transit, or one valve is open, and the other is closed, or for some microswitch failures. The *OPEN* and *CLOSE* positions of the *FWD RCS TANK ISOLATION 1/2* and *3/4/5* switches on panel O8 permit manual control of the corresponding pair of valves.

The *OPEN*, *GPC*, and *CLOSE* positions of the *AFT LEFT RCS TANK ISOLATION 1/2* and *3/4/5 A* and *B* and *AFT RIGHT RCS TANK ISOLATION 1/2* and *3/4/5 A* and *B* switches on panel O7 are the same type as those of the forward RCS tank isolation switches and are controlled electrically in the same manner. A talkback indicator above each switch indicates the position of the pair of valves as in the forward RCS. The *3/4/5 A* and *B* switches control parallel fuel and oxidizer tank isolation valves to permit or isolate propellants to the respective aft left and aft right RCS manifold isolation valves 3, 4, and 5.

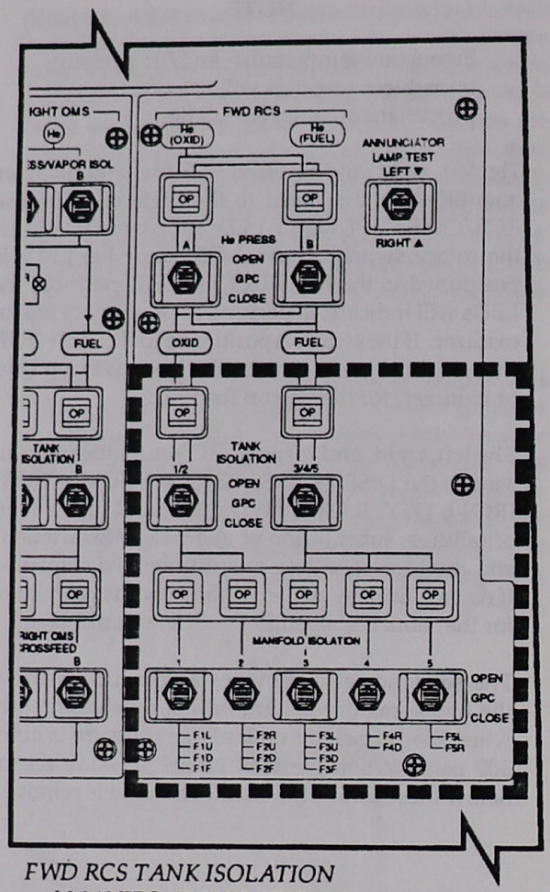

FWD RCS TANK ISOLATION and MANIFOLD ISOLATION Switches and Talkbacks on Panel O8

Manifold Isolation Valves

The forward RCS manifold isolation valves are between the tank isolation valves and the forward RCS jets. The valves for manifolds 1, 2, 3, and 4 are the same type of ac-motor-operated valves as the propellant tank isolation valves and are controlled by the same type of motor-switching logic. The forward RCS manifold valve pairs are controlled by the *FWD RCS MANIFOLD ISOLATION 1, 2, 3, 4,* and *5* switches on panel O8. When a switch is positioned to *GPC*, that pair of valves may be automatically opened or closed upon command

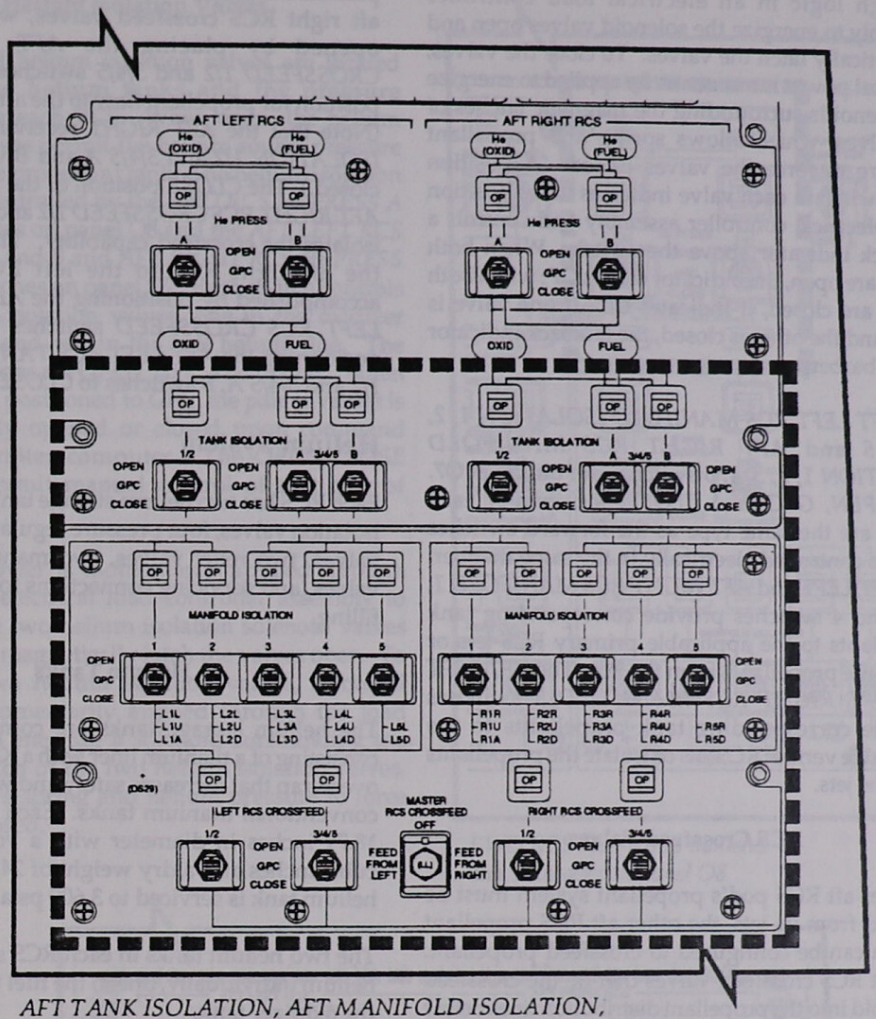

AFT TANK ISOLATION, AFT MANIFOLD ISOLATION, and RCS CROSSFEED Switches and Talkbacks on Panel O7

from the orbiter computer. A talkback indicator above each of the five switches on panel O8 indicates the status of that pair of valves. The talkback indicator is controlled in the same manner as the tank isolation valve indication. The *OPEN* and *CLOSE* positions of the switch permit manual control of the corresponding oxidizer and fuel valves. The *FWD RCS MANIFOLD 1, 2, 3,* and *4* switches control propellants for the forward primary RCS jets only.

NOTE

The manifold isolation valves have a backflow capability when the manifold is closed, and the manifold pressure is 30 to 50 psi higher than the tank leg.

The *FWD RCS MANIFOLD ISOLATION 5* switch on panel O8 controls the manifold 5 fuel and oxidizer valves, which control propellants for the forward vernier RCS jets only. The switch is spring-loaded in the *GPC* position, but it can be manually held in either *OPEN* or *CLOSE* for manual override capability. Electrical power is momentarily applied

through logic in an electrical load controller assembly to energize the solenoid valves open and magnetically latch the valves. To close the valves, electrical power is momentarily applied to energize the solenoids surrounding the magnetic latches of the valves, which allows spring and propellant pressure to force the valves closed. A position microswitch in each valve indicates valve position to an electrical controller assembly and controls a talkback indicator above the switch. When both valves are open, the indicator shows *OP*; when both valves are closed, it indicates *CL*. If one valve is open, and the other is closed, the talkback indicator shows barberpole.

The *AFT LEFT RCS MANIFOLD ISOLATION 1, 2, 3, 4, 5* and *AFT RIGHT RCS MANIFOLD ISOLATION 1, 2, 3, 4, 5* switches are on panel O7. The *OPEN, GPC,* and *CLOSE* positions of each switch are the same type as the forward switches and are controlled electrically in the same manner. The *AFT LEFT* and *AFT RIGHT RCS MANIFOLD 1, 2, 3,* and *4* switches provide corresponding tank propellants to the applicable primary RCS jets or isolate the propellants from the jets. The *AFT LEFT* and *AFT RIGHT RCS MANIFOLD 5* switches provide corresponding tank propellants to the applicable vernier RCS jets or isolate the propellants from the jets.

RCS Crossfeed Valves

If either aft RCS pod's propellant system must be isolated from its jets, the other aft RCS propellant system can be configured to crossfeed propellant. The aft RCS crossfeed valves that tie the crossfeed manifold into the propellant distribution lines below the tank isolation valves can be configured so that one aft RCS propellant system can feed both left and right RCS jets. The aft RCS crossfeed valves are ac-motor-operated valve actuators and identical in design and operation to the propellant tank isolation valves. The aft RCS crossfeed valves are controlled by the *AFT LEFT* and *AFT RIGHT RCS CROSSFEED 1/2* and *3/4/5* switches on panel O7. The positions of the four switches are *OPEN, GPC,* and *CLOSE*. The *GPC* position allows the orbiter computer to automatically control the crossfeed valves, and the *OPEN* and *CLOSE* positions enable manual control. The *OPEN* position of the *AFT LEFT RCS CROSSFEED 1/2* and *3/4/5* switches permits the aft left RCS to supply propellants to the aft right RCS crossfeed valves, which must be opened by placing the *AFT RIGHT RCS CROSSFEED 1/2* and *3/4/5* switches to the *OPEN* position for propellant flow to the aft right RCS jets. (Note that the *AFT RIGHT* receiving *RCS TANK ISOLATION 1/2* and *3/4/5 A* and *B* valves must be closed.) The *CLOSE* position of the *AFT LEFT* and *AFT RIGHT RCS CROSSFEED 1/2* and *3/4/5* switches isolates the crossfeed capability. The crossfeed of the aft right RCS to the left RCS would be accomplished by positioning the *AFT RIGHT* and *LEFT RCS CROSSFEED* switches to *OPEN* and positioning the *AFT LEFT RCS TANK ISOLATION 1/2* and *3/4/5 A, B* switches to *CLOSE*.

Helium System

Each RCS has two helium storage tanks, four helium isolation valves, four pressure regulators, two check valves, two relief valves, two manually operated valves, and servicing connections for draining and filling.

Helium Tanks

The helium storage tanks are composite spheres consisting of a titanium liner with a Kevlar structural overwrap that increases safety and weighs less than conventional titanium tanks. Each helium tank is 18.71 inches in diameter with a volume of 3,043 cubic inches and a dry weight of 24 pounds. Each helium tank is serviced to 3,600 psia.

The two helium tanks in each RCS supply gaseous helium individually, one to the fuel tank and one to the oxidizer tank.

NOTE

The helium tanks provide ullage pressure for the propellant tanks. Each propellant tank has a specific quantity where, should the helium tank fail, the nominal ullage pressure would result in the maximum delta V. This quantity is referred to as max blowdown. Max blowdown for the forward RCS is 22 percent; for the aft RCS, it is 24 percent propellant quantity remaining.

Helium Isolation Valves

Two parallel helium isolation valves are located between the helium tanks and the pressure regulators in each RCS. When open, the helium isolation valves permit the helium source pressure to flow to the propellant tank. The helium isolation valves are controlled by the *FWD RCS He PRESS A* and *B* switches on panel O8 and the *AFT LEFT RCS He PRESS A* and *B* and *AFT RIGHT RCS He PRESS A* and *B* switches on panel O7. Each switch controls two helium isolation valves, one in the oxidizer helium line and one in the fuel helium line. The switch positions are *OPEN*, *GPC*, and *CLOSE*. When the switch is positioned to *GPC*, the pair of valves is automatically opened or closed upon command from the orbiter computer. The *OPEN*/*CLOSE* positions permit manual control of that pair of valves.

Electrical power is momentarily applied through logic in an electrical load controller assembly to energize the two helium isolation solenoid valves open and to magnetically latch the valves open. To close the two helium isolation valves, electrical power is momentarily applied through the load controller to energize a solenoid surrounding the magnetic latch of the two helium isolation valves, which allows spring and helium pressure to force the valve closed.

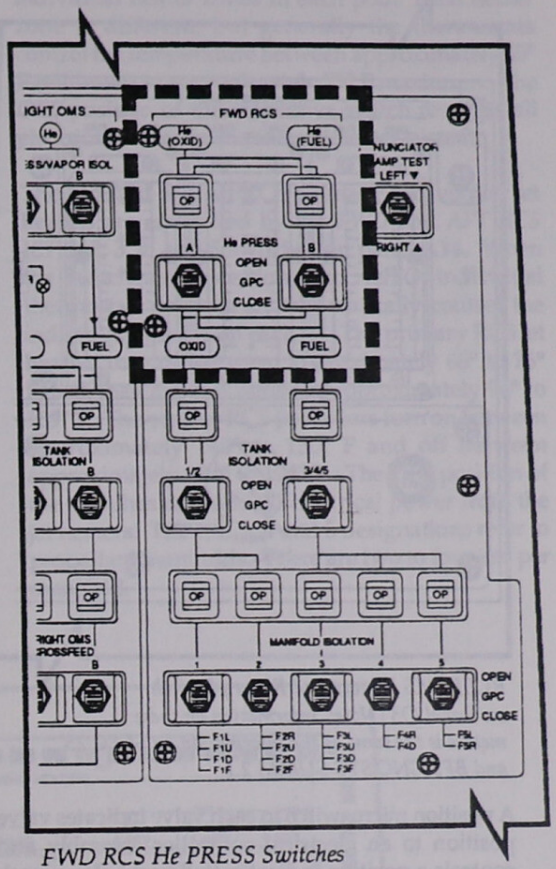

FWD RCS He PRESS Switches and Talkbacks on Panel O8

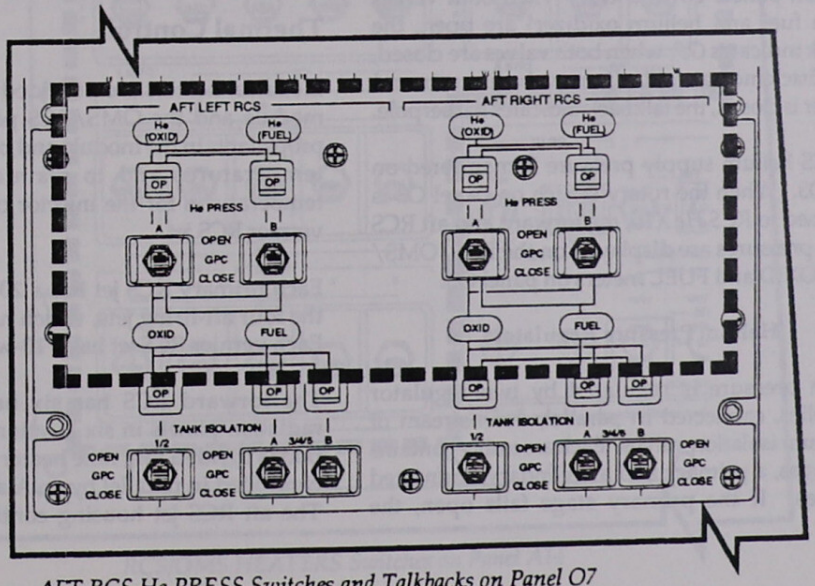

AFT RCS He PRESS Switches and Talkbacks on Panel O7

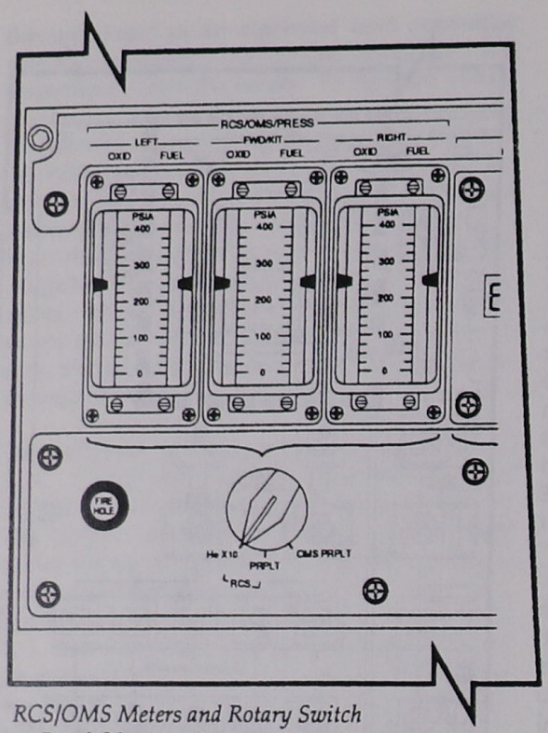

RCS/OMS Meters and Rotary Switch on Panel O3 (Note: Information on these meters is the same as the information on SPEC 23 and BFS GNC SYS SUMM 2.)

A position microswitch in each valve indicates valve position to an electrical controller assembly and controls a position indicator (talkback) above each switch on panels O7 and O8. When both valves (helium fuel and helium oxidizer) are open, the talkback indicates *OP*; when both valves are closed, the talkback indicates *CL*. If one valve is open, and the other is closed, the talkback indicates barberpole.

The RCS helium supply pressure is monitored on panel O3. When the rotary switch on panel O3 is positioned to *RCS He X10*, the forward and aft RCS helium pressures are displayed on the RCS/OMS/PRESS OXID and FUEL meters on panel O3.

Helium Pressure Regulators

Helium pressure is regulated by two regulator assemblies, connected in parallel, downstream of the helium isolation valves. Each assembly contains two stages, a primary and a secondary, connected in series. If the primary stage fails open, the secondary stage regulates the pressure. The primary regulates the pressure at 242 to 248 psig, the secondary at 253 to 259 psig.

Check Valves

The check valve assembly, which consists of four poppets in a series-parallel arrangement, is located between the pressure regulator assemblies and the propellant tank. The series arrangement limits the backflow of propellant vapor and maintains propellant tank pressure integrity in the event of an upstream helium leak. The parallel arrangement ensures the flow of helium pressure to the propellant tank if a series check valve fails in the closed position.

Pressure Relief Valve

A helium pressure relief valve assembly located between the check valve assemblies and propellant tank will vent excessive pressure overboard before it reaches the propellant tank. Each valve consists of a burst diaphragm, filter, and relief valve. The non-fragmentation diaphragm, which provides a positive seal against helium leakage, will rupture between 324 and 340 psig. The filter prevents any particles of the burst diaphragm from reaching the relief valve seat. The relief valve relieves at 315 psig minimum and reseats at 310 psig. The relief valve is sized to handle, without damaging the propellant tank, helium pressure flow volume if a regulator malfunctions to a full-open position.

Thermal Control

Electrical heaters are provided in the forward RCS module and the OMS/RCS pods to maintain the propellants in the module and pods at safe operating temperatures and to maintain safe operating temperatures for the injector of each primary and vernier RCS jet.

Each primary RCS jet has a 20-watt heater, except the four aft-firing jets, which have 30-watt heaters. Each vernier RCS jet has a 10-watt heater.

The forward RCS has six heaters mounted on radiation panels in six locations. Each OMS/RCS pod is divided into nine heater zones. Each zone is controlled in parallel by an A and B heater system. The aft RCS jet housing contains heaters for the

yaw, pitch up, pitch down, and vernier jets in addition to the aft OMS/RCS drain and purge panels.

The forward RCS panel heaters are controlled by the *FWD RCS* switch on panel A14. When the switch is positioned to *A AUTO* or *B AUTO*, thermostats on the forward left-side panel and right-side panel automatically control the respective forward RCS heaters. When the respective forward RCS panel temperature reaches a minimum of approximately 55° F, the respective panel heaters are turned on. When the temperature reaches a maximum of approximately 75° F, the heaters are turned off. The *OFF* position of the switch removes all electrical power from the forward RCS heaters.

The aft RCS heaters are controlled by the *LEFT POD A AUTO* and *B AUTO* and *RIGHT POD A AUTO* and *B AUTO* switches on panel A14. When the switches are positioned to either *A AUTO* or *B AUTO*, thermostats automatically control the nine individual heater zones in each pod. Each heater zone is different, but generally the thermostats control the temperature between approximately 55° F minimum to approximately 75° F maximum. The *OFF* position of the respective switch removes all electrical power from that pod heater system.

The forward and aft RCS primary and vernier jet heaters are controlled by the *FWD* and *AFT RCS JET 1, 2, 3, 4,* and *5* switches on panel A14. When the switches are positioned to *AUTO*, individual thermostats on each jet automatically control the individual heaters on each jet. The primary RCS jet heaters turn on between approximately 66° to 76° F, and they turn off between approximately 94° to 109° F. The vernier RCS jet heaters turn on between approximately 140° to 150° F and off between approximately 184° to 194° F. The *OFF* position of the switches removes all electrical power from the jet heaters. The 1, 2, 3, 4 and 5 designations refer to propellant manifolds. There are two to four jets per manifold.

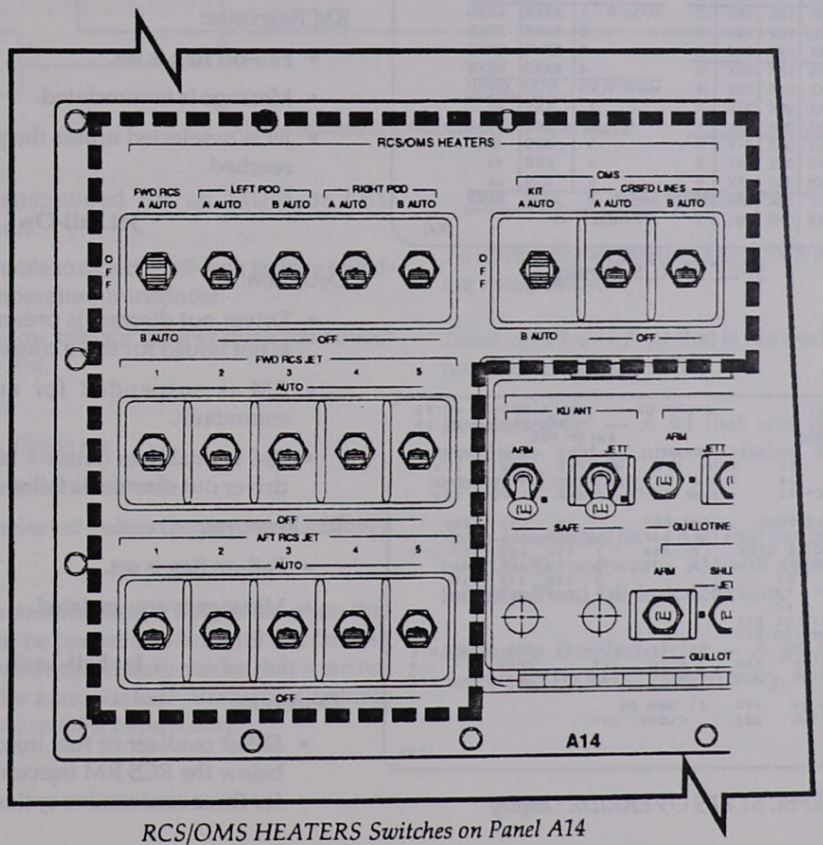

RCS/OMS HEATERS Switches on Panel A14

RCS Redundancy Management

RCS redundancy management (RM) software includes RCS jet failure detection and annunciation, jet availability, SPEC 23 RCS, SPEC 51 BFS OVERRIDE, and manifold status processing.

Jet failure modes detected and annunciated are fail-off, fail-on, and fail-leak. Fault annunciation is a class 2 alarm consisting of a master alarm, illumination of the yellow *RCS JET* and red *BACKUP C/W ALARM* lights on panel F7, and a fault summary message (F (L,R) RCS A (D, R, U) JET).

XXXX/023/ RCS XX X DDD/HH:MM:SS
DDD/HH:MM:SS

RCS FWD 1X
L 2X
R 3X

PRI JET
4 FAIL LIM X

OMS PRESS ENA
L OMS 5X OMS →RCS QTY
R OMS 6X L XX.XXS
OFF 7X R XX.XXS

JET	FAIL	DES INH	JET DES	PTY
XXX	XXX	8X	9X	X
XX	XXX	10X	11X	X
Y XX	XXX	12X	13X	X
XX	XXX	14X	15X	X
XXU	XXX	16X	17X	X
XU	XXX	18X	19X	X
Z XU	XXX	20X	21X	X
XXX	XXX	22X	23X	X
XD	XXX	24X	25X	X
2D	XXX	26X	27X	X
XD	XXX	28X	29X	X
XXX	XXX	30X	31X	X
X XX	XXX	32X	33X	X
XX	XXX	34X	35X	X
X5X	XXX	36X	37X	X
V 5X	XXX	38X	39X	X

		OXID	FU
HE	P	XXXS	XXXS
PRPLT TK P		XXXS	XXXS
T		XXXS	XXXS
QTY		XXXS	XXXS
MANF P	1	XXXS	XXXS
	2	XXXS	XXXS
	3	XXXS	XXXS
	4	XXXS	XXXS

MANF VLVS	STAT	OVRD
1	XXS	40
2	XXS	41
3	XXS	42
4	XXS	43
5	XXS	44

XFEED P XXXS XXXS
JET RESET 45

(XX)

SPEC 23 RCS Display

XXXX/051/ OVERRIDE XX X DDD/HH:MM:SS
BFS DDD/HH:MM:SS

ABORT MODE
TAL 1X
ATO 2X
ABORT 3X
MAX THROT 4X

ENTRY FCS
ELEVON
AUTO 17X
FIXED 18X
SSME REPOS 19 XXX

FILTER
NOM 20X
ALT 21X

ATMOSPHERE
NOM 22X
N POLE 23X
S POLE 24X

PROPLT DUMP
XXX ICNCT 5 XXXX
OMS DUMP
ARM 6X
START 7X
STOP 8X
9 QUAN/SIDE XXX
OMS DUMP TTG XXX

IMU DES
1 25X
2 26X
3 27X

LRU	AA DES	RGA DES	SURF DES
1	31X	35X	39X
2	32X	36X	40X
3	33X	37X	41X
4	34X	38X	42X

ET SEP
AFT RCS 13 XXX
14 TIME XXX
AUTO 28X
SEP 29X

VENT DOOR CNTL
OPEN 43X
CLOSE 44X

FWD RCS 15 XXX
16 TIME XXX
ET UMB DR
CLOSE 30X

(XX)

SPEC 51 BFS OVERRIDE Display

All statuses, flags, counters, and related RCS RM data are carried across OPS transitions. However, when BFS is engaged, all flags, statuses, and counters are cleared and reinitialized.

The jet parameters used in RM are the Pc discrete, CMD B, driver out discrete, and the oxidizer and fuel injector temperatures. Pc discrete is turned on when the jet chamber pressure reaches 36 psi and remains on until the chamber pressure falls below 26 psi. Individual fail detection and response parameters are described below.

Jet Fail-Off

Detection:

- CMD B present with no Pc Discrete for three consecutive cycles.
- RM is suspended for an MDM or LRU commfault.
- RM is unable to detect a fail-off jet when the Pc transducer is failed high.

RM Response:

- Fail-off flag is set.
- Message is annunciated.
- Jet is deselected unless the pod limit has been reached.

Jet Fail-On

Detection:

- Driver out discrete is present when a CMD B is not issued for three consecutive cycles.
- RM is suspended for an MDM or LRU commfault.
- RM is unable to detect a fail-on jet when the driver out discrete is failed low.

RM Response:

- Fail-on flag is set.
- Message is annunciated.

Jet Fail-Leak

Detection:

- Either oxidizer or fuel injector temperature is below the RCS RM injector temperature limit for three consecutive cycles.

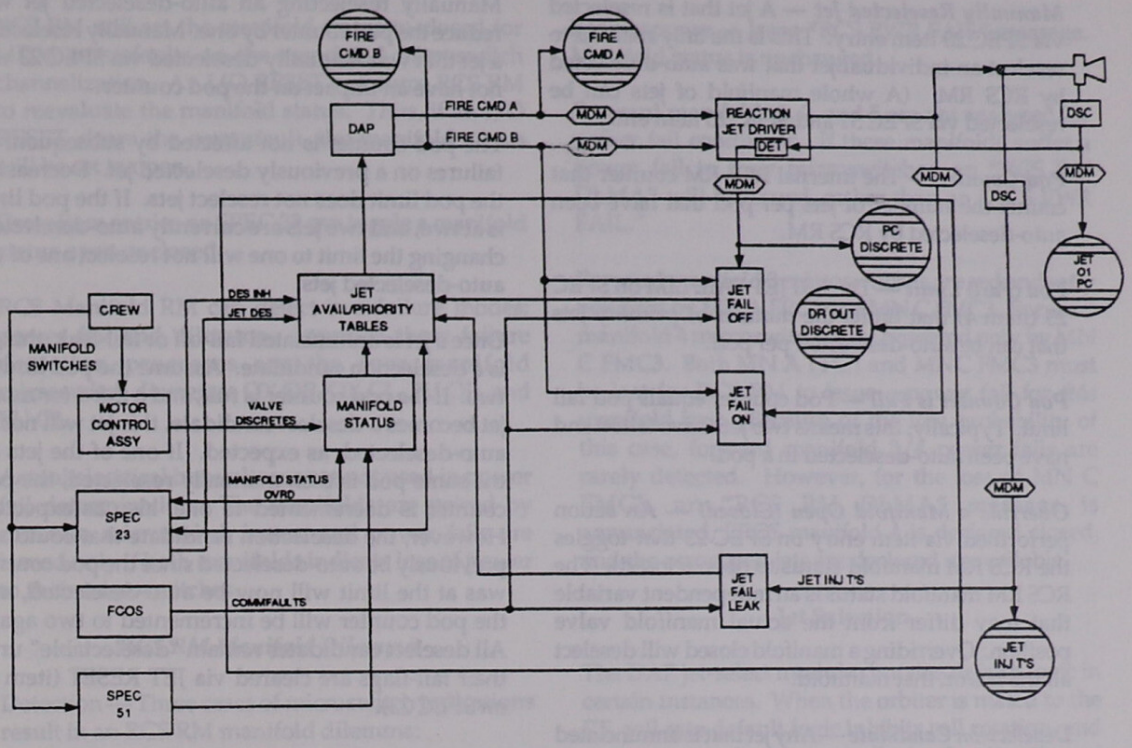

RCS Redundancy Management Schematic

- RM is suspended for an MDM or LRU commfault.
- RM is unable to detect a fail-leak jet for a failed-high temperature transducer.
- A failed-low injector temperature transducer will trip RM.

RM Response:

- Fail-leak flag is set.
- Message is annunciated.
- Jet is deselected unless the pod limit has been reached.

Once RM has annunciated a failure for a jet, that failure will not be reannunciated until the fail flag is reset. The remaining failure modes that were not detected can be annunciated. Vernier jet failures are annunciated in OPS 2 and 8 only.

Nomenclature

To clarify nomenclature, a few RCS RM definitions are listed below.

Deselected Jet — A jet that is not available and will not be commanded to fire.

Reselected Jet — A jet that was previously not available and is now available and could be commanded to fire.

Auto-Deselected Jet — A jet that has been deselected by RCS RM software. RM will auto-deselect a jet for fail-off and fail-leak detection.

Manually Deselected Jet — A jet that has been deselected by SPEC 23 item entry.

Manually Reselected Jet — A jet that is reselected via SPEC 23 item entry. This is the only method to reselect an individual jet that was auto-deselected by RCS RM. (A whole manifold of jets can be reselected via SPEC 51 and SPEC 23 item entry.)

Pod Counter — The internal RCS RM counter that counts the number of jets per pod that have been auto-deselected by RCS RM.

Pod (Fail) Limit — The PRI JET FAIL LIM on SPEC 23 (item 4) that limits the number of primary jets that can be auto-deselected per pod.

Pod Counter is Full — Pod counter equals pod fail limit. Typically, this means two jets have failed and have been auto-deselected in a pod.

Override a Manifold Open (Closed) — An action performed via item entry on SPEC 23 that toggles the RCS RM manifold status to open (closed). The RCS RM manifold status is an independent variable that may differ from the actual manifold valve position. Overriding a manifold closed will deselect all the jets on that manifold.

Deselection Candidate — Any jet that is annunciated fail-off or fail-leak by RCS RM becomes a deselection candidate, unless the jet has been deselect inhibited.

Jet Availability Table — An array that contains a bit for each jet. The bit is on if the associated jet is available and may be commanded to fire by DAP. The bit is off when the jet is not available as determined by RCS RM. Unavailable jets will not be commanded to fire.

Jet Pod Counter and Pod Limit

RCS SPEC 23 displays the PRI JET FAIL LIM. This limit is the number of primary jets that RCS RM will deselect for the pod (forward, left, or right) currently displayed on SPEC 23. This number is I-loaded to 2 and can be changed via SPEC 23.

RCS RM will auto-deselect primary jets until the pod counter equals the pod limit. RM will continue to annunciate all jet failures not previously annunciated when the pod counter is full; however, no new jets will be auto-deselected.

Manually reselecting an auto-deselected jet will reduce the pod counter by one. Manually reselecting a jet that was manually deselected via SPEC 23 will not have an impact on the pod counter.

The pod counter is not affected by subsequent jet failures on a previously deselected jet. Decreasing the pod limit does not reselect jets. If the pod limit is at two, and two jets are currently auto-deselected, changing the limit to one will not reselect one of the auto-deselected jets.

Once a jet is annunciated fail-off or fail-leak, that jet is a deselection candidate. Assume the pod limit is two. If the pod counter is full, and a third (or more) jet becomes a deselect candidate, this jet will not be auto-deselected, as expected. If one of the jets on the same pod is then manually reselected, the pod counter is decremented to one, also as expected. However, the deselection candidate that could not previously be auto-deselected since the pod counter was at the limit will now be auto-deselected, and the pod counter will be incremented to two again. All deselect candidates remain "deselectable" until their fail-flags are cleared via JET RESET (item 45 on SPEC 23).

RCS Manifold RM

RCS RM contains an independent evaluation of RCS manifold valve status. Input to this processing includes the actual manifold valve status, commfault protection, and crew display item entry processing. The RCS RM manifold status can differ from the actual valve positions. Manifold status is reevaluated when valve discretes change, a commfault occurs, or manifold status is changed by crew display item entries. A commfault is declared when the data path for the manifold valve microswitch discrete is failed. A commfault occurs when an MDM or GPC fails, or a BCE BYPASS is declared.

If RCS RM sets the manifold status to closed, all jets on the affected manifold will be removed from the availability table. Manifold status is set to closed by RCS RM in four cases: manually closing the valve, commfault, crew display item entry, and some dilemma cases.

RCS RM will set the manifold status to closed for MDM commfaults on the associated microswitch channelization. An I/O RESET will force RCS RM to reevaluate the manifold status. Thus, if an I/O RESET clears the commfault, the manifold status will be set to open.

Crew item entries on SPEC 23 can toggle a manifold status open or closed.

RCS Manifold RM can detect two failure modes: power fail and dilemma. Input to these failure detection processes are the four manifold microswitch discretes: OX OP, OX CL, FU OP, and FU CL.

Actual electrical bus voltages are not used in power fail determination. The manifolds are paired by common microswitch buses, and power fails are issued only if both manifolds indicate loss of power to their microswitches.

RCS RM Manifold Dilemma

Detection — Three cases of microswitch indications result in an RCS RM manifold dilemma:

- 1 OP indication + 1 or 0 CL indications
- 2 OP indications + 2 CL indications
- 0 OP indications + 0 CL indications (FRCS manifolds 1, 2, 4, and 5 only).

Indications can be OX and/or FU microswitches. These conditions must exist for three consecutive passes.

RM Response — Issue "RCS RM DLMA" message.

In summary, if the number of open indications is greater than the number of closed indications, the manifold status is open; otherwise, the manifold status is closed.

RCS Manifold Power Fail

Detection — All four manifold microswitch discretes are 0 for six consecutive passes. Power fail processing is performed on the following manifold pairs: FRCS M3/4, ARCS L1/R1, L2/R2, L3/R3, L4/R4, and L5/R5.

RM Response — Issue "RCS PWR FAIL" message. Manifold status is unchanged.

Forward manifolds 1, 2, and 5 are not analyzed for power fail conditions. If these manifolds suffer a power fail to their microswitches, an "RCS RM DLMA" will be issued, rather than an "RCS PWR FAIL."

Forward manifold 3 microswitches are redundantly powered by MN A FPC1 and MN C FMC3. Forward manifold 4 microswitches are powered only by MN C FMC3. Both MN A FPC1 and MNC FMC3 must be lost for RCS RM to issue a power fail for this manifold pair. Because of the low probability of this case, forward manifold 3/4 power fails are rarely detected. However, for the loss of MN C FMC3, an "RCS RM DLMA" message is annunciated, FRCS manifold 4 is declared closed, and the associated jets are declared unavailable.

Jet Selection

The DAP jet-select module contains default logic in certain instances. When the orbiter is mated to the ET, roll rate default logic inhibits roll rotation, and yaw commands are normally in the direction of favorable yaw-roll coupling. During insertion, a limit of seven aft RCS jets per tank set applies for ET separation and for return-to-launch-site aborts. If negative Z and plus X translation commands are commanded simultaneously, both will be degraded. A limit of four aft RCS jets per tank set normally applies. If plus X and negative Z translations are commanded simultaneously, plus X is given priority. Multi-axis translation and rotation commands may require more jets than allowed and result in degraded control and excessive propellant usage.

The DAP jet-select module determines which aft RCS jets (right, left, or both) must be turned on in response to the pitch, roll, and yaw jet commands from the entry flight control system. The forward RCS jets are not used during entry. After entry interface, only the four Y-axis and six Z-axis RCS jets on each aft RCS pod are used. No X-axis or vernier jets are used. The DAP sends the discretes that designate which aft RCS jets are available for firing (a maximum of four RCS jets per pod may be

fired). During reconfiguration, or when the RCS crossfeed valves are open, the DAP determines the maximum combined total number of yaw jets available during certain pitch and roll maneuvers.

During ascent or entry, the DAP jet-select logic module in the flight control system receives both RCS rotation and translation commands. By using a table lookup technique, the module outputs 38 jet on/off commands to the RCS command subsystem operating program, which then generates dual fire commands A and B to the individual RCS reaction jet drivers to turn each of the 38 primary RCS jets on or off. The fire commands A and B for each of the 38 primary RCS jets are set equal to the digital autopilot RCS commands. Commands are issued to the six RCS vernier jets similarly on orbit.

Jet Fire Indications

ROLL, *PITCH*, and *YAW* white indicator lights on panel F6 indicate the presence of an RCS command during orbit and early entry. The indicators are *L* and *R* for roll and yaw left or right and *U* and *D* for pitch up and down.

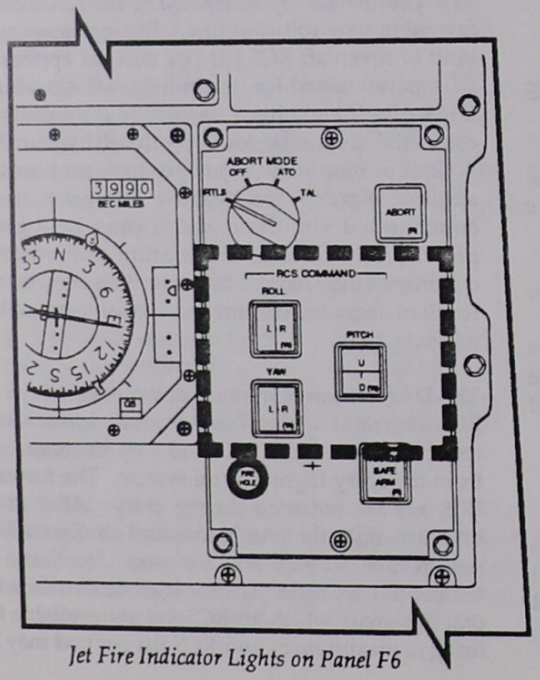

Jet Fire Indicator Lights on Panel F6

From entry interface until the dynamic pressure is greater than 10 pounds per square foot, the *ROLL L* and *ROLL R* lights indicate that left or right roll commands have been issued by the digital autopilot. The minimum light-on duration is extended to allow the light to be seen even for a minimum impulse firing. When a dynamic pressure of 10 pounds per square foot has been sensed, neither *ROLL* light will be illuminated until 50 pounds per square foot has been sensed, and more than two RCS yaw jets are commanded on.

The *PITCH* lights indicate up and down pitch jet commands until a dynamic pressure of 20 pounds per square foot is sensed, after which the pitch jets are no longer used. When 50 pounds per square foot is sensed, the *PITCH* lights assume a new function. Both *PITCH* lights will be illuminated whenever the elevon surface drive rate exceeds 20 degrees per second (14 degrees per second if only one hydraulic system is remaining).

The *YAW* lights function as yaw jet command indicators throughout entry until the yaw jets are disabled at Mach 1 (approximately 45,000 feet). The *YAW* lights have no other function.

Operations

After main engine cutoff, the forward and aft jets are used to maintain attitude hold until external tank separation. Then the RCS provides a negative Z translation maneuver of about 4 feet per second to move the orbiter away from the external tank. Upon completion of the maneuver, the RCS holds the orbiter attitude until it is time to maneuver to the OMS-1 burn attitude. Although the targeting data for the OMS-1 burn are selected before launch, the target data in the onboard general-purpose computers can be modified by the flight crew via the CRT and keyboard, if necessary, before the OMS burn.

The first OMS burn uses both OMS engines to raise the orbiter to a predetermined elliptical orbit. (OMS-1 burns are only planned for standard insertions.) During the OMS-1 burn, vehicle attitude is maintained by gimbaling (swiveling) the OMS engines. The RCS normally does not operate during an OMS burn. If, during an OMS burn, the gimbal rate or gimbal limits are exceeded, RCS roll control

would be required; or if only one OMS engine is used during a burn, RCS roll control may be required.

Upon completion of the OMS-1 burn, the RCS can be used to null any residual velocities, if required. The flight crew uses the translational hand controller to command the applicable RCS thrusters to null the residual velocities. The RCS then provides attitude hold until it is time to maneuver to the OMS-2 burn attitude.

Upon completion of the OMS-2 burn, the RCS can be used to null any residual velocities, if required. It is then used for attitude hold and minor translation maneuvers as required for on-orbit operations. The flight crew can select primary or vernier RCS jets for attitude control in orbit. Normally, the vernier jets are selected for on-orbit attitude hold.

On orbit, the vernier jets are used for fine attitude control, and the primary jets are used for coarse attitude control and minor translations.

Before the deorbit burn, the flight crew maneuvers the spacecraft to the desired attitude using RCS jets. After the OMS burn, the RCS is used to null any residual velocities, if required. The spacecraft is then maneuvered to the proper entry interface attitude using the RCS. The remaining propellants aboard the forward RCS may be dumped by burning the propellants through the forward RCS yaw jets before entry interface if orbiter center-of-gravity control is necessary. If forward RCS programmed test inputs are programmed for the mission, propellant will be saved to fire forward RCS jets during entry to determine the aerodynamic effects of forward RCS jet firings.

The RCS aft (+ X) jets can be used to complete any OMS deorbit burn if an OMS engine fails. In this case, the OMS-to-aft-RCS interconnect can be used to feed OMS propellant to the aft RCS.

From an entry interface of 400,000 feet, the orbiter is controlled in roll, pitch, and yaw with the aft RCS jets. The orbiter's ailerons are used starting at a dynamic pressure (q-bar) of 2 pounds per square foot (psf), and the aft RCS roll jets are deactivated at a q-bar of 10 psf. At a q-bar of 2 psf, the orbiter's elevons are active, and the aft RCS pitch jets are deactivated at a q-bar of 40 psf. The rudder is activated at Mach 5.0, and the aft RCS yaw jets are deactivated at Mach 1 (approximately 45,000 feet).

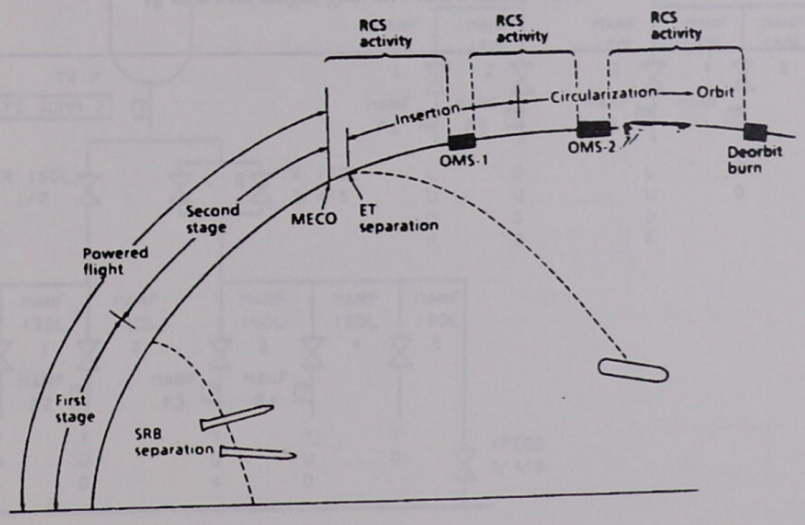

Nominal Ascent Profiles

RCS Caution and Warning Summary

- The red *LEFT RCS, FWD RCS,* or *RIGHT RCS* light will illuminate if oxidizer tank ullage pressure is less than 200 psia or higher than 300 psia. Exceeding a preset difference of 9.5 percent between fuel and oxidizer propellant masses will also illuminate the appropriate one of these lights, activate the *BACKUP C/W ALARM,* and send a fault message to the CRT.
- RCS jet failure illuminates the yellow *RCS JET* and red *BACKUP C/W ALARM* lights and sends a fault message to the CRT.

O_2 PRESS	H_2 PRESS	FUEL CELL REAC (R)	FUEL CELL STACK TEMP	FUEL CELL PUMP
CABIN ATM (R)	O_2 HEATER TEMP	MAIN BUS UNDERVOLT (R)	AC VOLTAGE	AC OVERLOAD
FREON LOOP (R)	AV BAY/ CABIN AIR	IMU	FWD RCS (R)	RCS JET
H_2O LOOP	RGA/ACCEL	AIR DATA (R)	LEFT RCS (R)	RIGHT RCS (R)
———	LEFT RHC (R)	RIGHT/AFT RHC (R)	LEFT OMS (R)	RIGHT OMS (R)
PAYLOAD WARNING (R)	GPC	FCS SATURATION (R)	OMS KIT	(R)
PAYLOAD CAUTION	PRIMARY C/W	FCS CHANNEL	MPS (R)	———
BACKUP C/W ALARM (R)	APU TEMP	APU OVERSPEED	APU UNDERSPEED	HYD PRESS

RCS Caution and Warning Lights on Panel F7

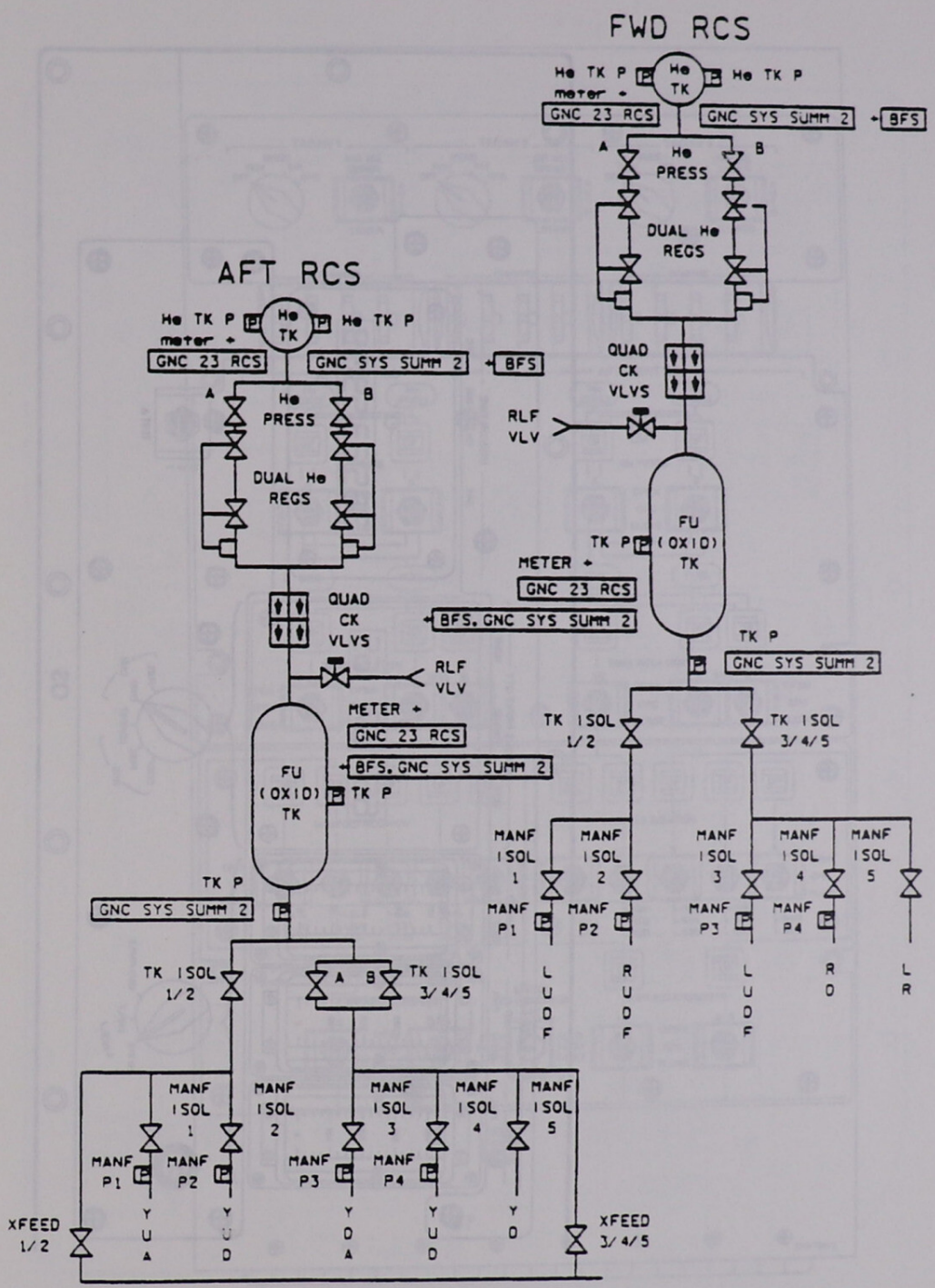

Reaction Control System

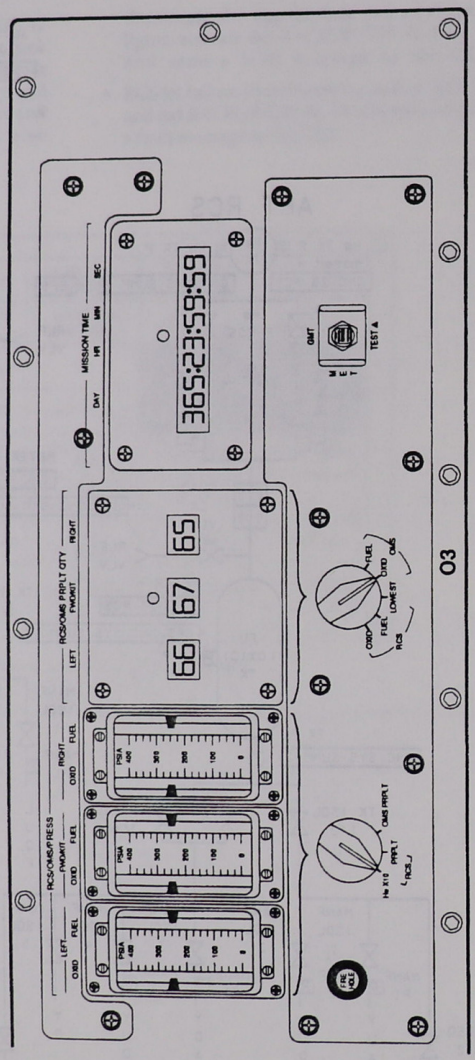
RCS/OMS/PRESS
LEFT
FWD/AFT
RIGHT
OXID
FUEL
RCS/OMS PRPLT QTY
MISSION TIME
DAY
HR
MIN
SEC
365:23:59:59
66
67
65
03
OMS PRPLT
RCS
TEST A

Panel O3

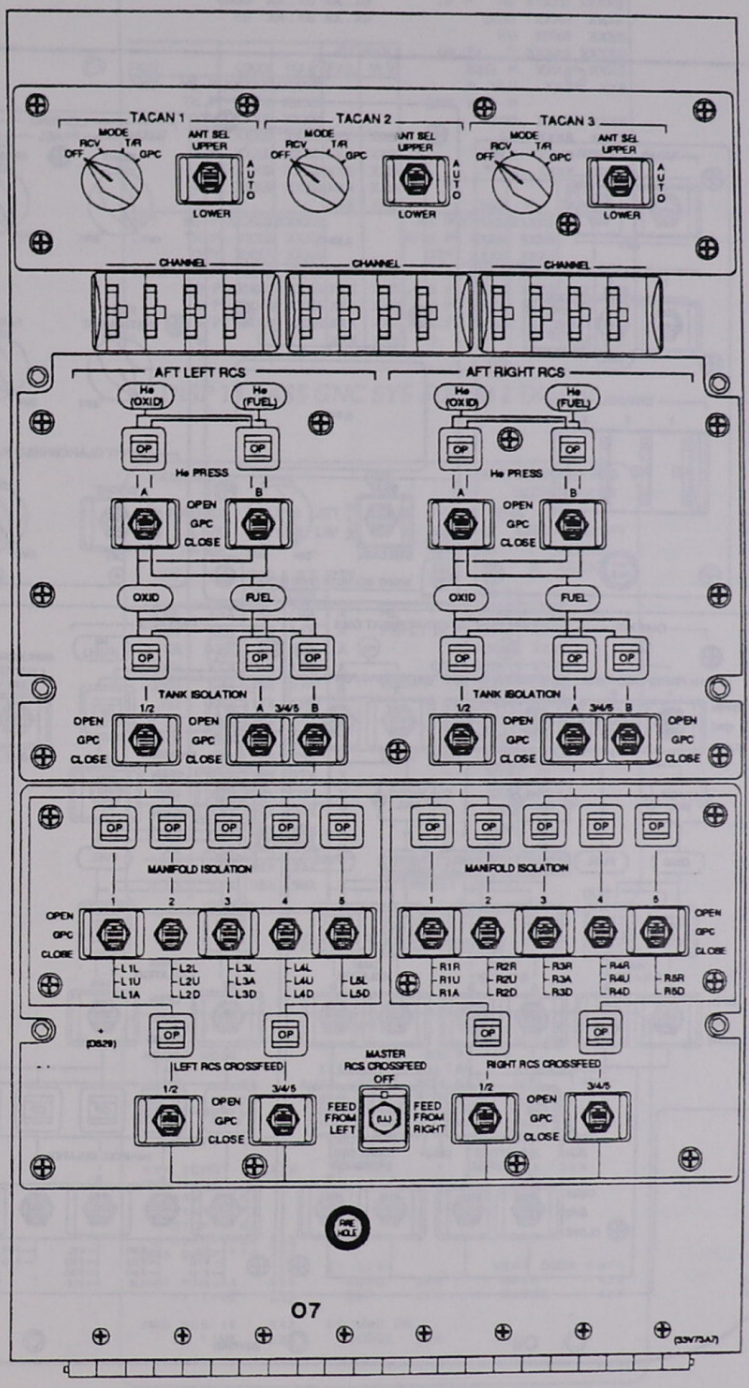
TACAN 1
TACAN 2
TACAN 3
MODE
OFF
RCV
T/R
GPC
ANT SEL
UPPER
LOWER
AUTO
CHANNEL
AFT LEFT RCS
AFT RIGHT RCS
He (OXID)
He (FUEL)
OP
He PRESS
A
B
OPEN
GPC
CLOSE
OXID
FUEL
TANK ISOLATION
1/2
3/4/5
MANIFOLD ISOLATION
1
2
3
4
5
L1L
L1U
L1A
L2L
L2U
L2D
L3L
L3A
L3D
L4L
L4U
L4D
L5L
L5D
R1R
R1U
R1A
R2R
R2U
R2D
R3R
R3A
R3D
R4R
R4U
R4D
R5R
R5D
LEFT RCS CROSSFEED
MASTER RCS CROSSFEED
OFF
FEED FROM LEFT
FEED FROM RIGHT
RIGHT RCS CROSSFEED
O7

Panel O7

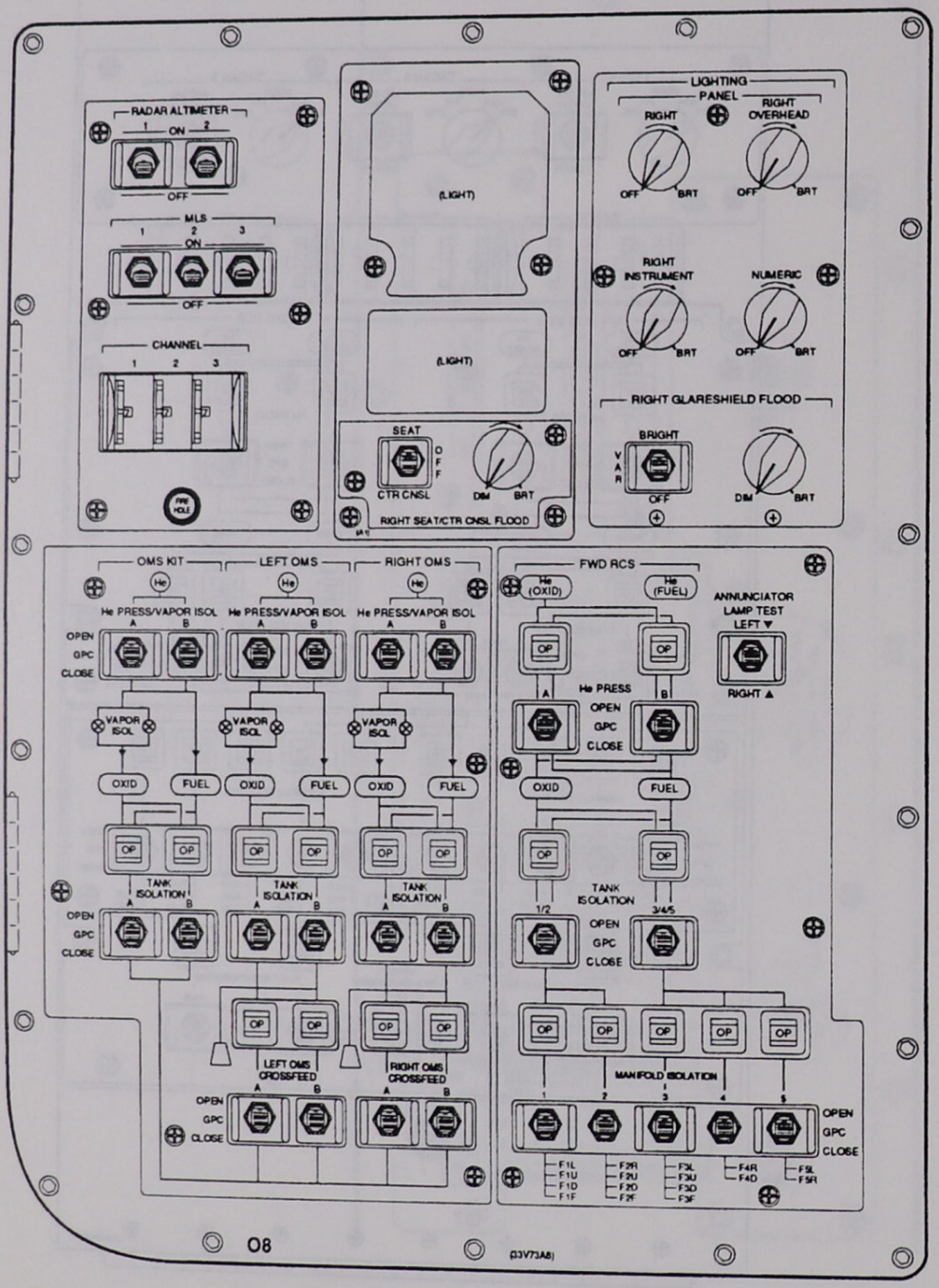
RADAR ALTIMETER
1 ON 2
OFF
MLS
1 2 3
ON
OFF
CHANNEL
1 2 3
(LIGHT)
(LIGHT)
SEAT
OFF
CTR CNSL
DIM
BRT
RIGHT SEAT/CTR CNSL FLOOD
LIGHTING
PANEL
RIGHT
RIGHT OVERHEAD
OFF
BRT
RIGHT INSTRUMENT
NUMERIC
RIGHT GLARESHIELD FLOOD
BRIGHT
VAR
OMS KIT
LEFT OMS
RIGHT OMS
He PRESS/VAPOR ISOL
A B
OPEN
GPC
CLOSE
VAPOR ISOL
OXID
FUEL
OP
TANK ISOLATION
LEFT OMS CROSSFEED
RIGHT OMS CROSSFEED
FWD RCS
He (OXID)
He (FUEL)
ANNUNCIATOR LAMP TEST
LEFT
RIGHT
He PRESS
TANK ISOLATION
1/2
3/4/5
MANIFOLD ISOLATION
1 2 3 4 5
F1L F1U F1D F1F
F2R F2U F2D F2F
F3L F3U F3D F3F
F4R F4D
F5L F5R
O8
(33V73A8)

Panel O8

XXXX/XXX/019 GNC SYS SUMM 2 XX X DDD/HH:MM:SS
DDD/HH:MM:SS

OMS AFT QTY L R
OXID XX.XS XX.XS
FU XX.XS XX.XS

RCS		OXID	FU	JET FAIL	ISOL VLV
FWD	HE P	XXXXS	XXXXS		
	TK P	XXXS	XXXS		
	QTY	XXXS	XXXS		
MANF	1 P	XXXS	XXXS	XXX	XXS
	2 P	XXXS	XXXS	XXX	XXS
	3 P	XXXS	XXXS	XXX	XXS
	4 P	XXXS	XXXS	XXX	XXS
	5			XXX	XXS
AFT	HE P	XXXXS	XXXXS		
L	TK P	XXXS	XXXS		
	QTY	XXXS	XXXS		
MANF	1 P	XXXS	XXXS	XXX	XXS
	2 P	XXXS	XXXS	XXX	XXS
	3 P	XXXS	XXXS	XXX	XXS
	4 P	XXXS	XXXS	XXX	XXS
	5			XXX	XXS

OMS L R
TK P HE XXXXS XXXXS
OXID XXXS XXXS
FU XXXS XXXS
N2 TK P XXXXS XXXXS
REG P XXXS XXXS
P VLV XXS XXS
ENG IN P
OXID XXXS XXXS
FU XXXS XXXS
VLV 1 XXXS XXXS
2 XXXS XXXS

		OXID	FU	JET FAIL	ISOL VLV
	HE P	XXXXS	XXXXS		
R	TK P	XXXS	XXXS		
	QTY	XXXS	XXXS		
	1 P	XXXS	XXXS	XXX	XXS
	2 P	XXXS	XXXS	XXX	XXS
	3 P	XXXS	XXXS	XXX	XXS
	4 P	XXXS	XXXS	XXX	XXS
	5			XXX	XXS

(XX)

DISP 19 PASS GNC SYS SUMM 2 Display

XXXX/023/ RCS XX X DDD/HH:MM:SS
DDD/HH:MM:SS

RCS FWD 1X PRI JET
L 2X 4 FAIL LIM X
R 3X

JET	FAIL	DES INH	JET DES	PTY
XXX	XXX	8X	9X	X
XX	XXX	10X	11X	X
Y XX	XXX	12X	13X	X
XX	XXX	14X	15X	X
XXU	XXX	16X	17X	X
XU	XXX	18X	19X	X
Z XU	XXX	20X	21X	X
XXX	XXX	22X	23X	X
XD	XXX	24X	25X	X
2D	XXX	26X	27X	X
XD	XXX	28X	29X	X
XXX	XXX	30X	31X	X
X XX	XXX	32X	33X	X
XX	XXX	34X	35X	X
X5X	XXX	36X	37X	X
V 5X	XXX	38X	39X	X

OMS PRESS ENA
L OMS 5X OMS →RCS QTY
R OMS 6X L XX.XXS
OFF 7X R XX.XXS

		OXID	FU
HE	P	XXXXS	XXXXS
PRPLT TK	P	XXXS	XXXS
	T	XXXS	XXXS
	QTY	XXXS	XXXS
MANF P	1	XXXS	XXXS
	2	XXXS	XXXS
	3	XXXS	XXXS
	4	XXXS	XXXS

MANF VLVS	STAT	OVRD
1	XXS	40
2	XXS	41
3	XXS	42
4	XXS	43
5	XXS	44

XFEED P XXXS XXXS
JET RESET 45

(XX)

SPEC 23 RCS Display

XXXX/051/ OVERRIDE XX X DDD/HH:MM:SS
BFS DDD/HH:MM:SS

ABORT MODE
TAL 1X
ATO 2X
ABORT 3X
MAX THROT 4X

ELEVON
AUTO 17X
FIXED 18X
SSME REPOS 19 XXX

ENTRY FCS
FILTER
NOM 20X
ALT 21X

ATMOSPHERE
NOM 22X
N POLE 23X
S POLE 24X

PROPLT DUMP
XXX ICNCT 5 XXXX
OMS DUMP
ARM 6X
START 7X
STOP 8X
9 QUAN/SIDE XXX
OMS DUMP TTG XXX

IMU DES
1 25X
2 26X
3 27X

LRU	AA DES	RGA DES	SURF DES
1	31X	35X	39X
2	32X	36X	40X
3	33X	37X	41X
4	34X	38X	42X

ET SEP
AFT RCS 13 XXX
14 TIME XXX
FWD RCS 15 XXX
16 TIME XXX

AUTO 28X
SEP 29X

ET UMB DR
CLOSE 30X

VENT DOOR CNTL
OPEN 43X
CLOSE 44X

(XX)

SPEC 51 BFS OVERRIDE Display

RCS Summary Data

- The RCS consists of forward and aft systems of control jets, propellant storage tanks, and distribution networks located in three separate vehicle modules.
- The forward module is in the nose area, and the left and right aft modules are in the left and right OMS/RCS pods near the tail of the vehicle.
- The forward RCS has 14 primary and two vernier jets; the aft RCS has 12 primary and two vernier jets per pod.
- Primary jets provide 870 pounds each of vacuum thrust; vernier 24 each. The vernier jets are only used on orbit for fine attitude control.
- Each jet is permanently fixed to fire in a general direction. The selective firing of individual jets or combinations of jets provides thrust for attitude control, rotational maneuvers, and translational maneuvers.
- Manual RCS use is through the rotational and translational hand controllers, and automatic use is handled by the digital autopilot and the general purpose computers.
- Nominal uses of the RCS include mated coast, ET separation, and trim residuals during ascent; attitude control and maneuvers in orbit; and entry flight control and center of gravity management.
- Off-nominal uses include single-engine roll control, RCS wraparound during OMS burn, OMS completions, and abort dumps.
- RCS jets are fueled with N_2O_4 and MMH. The propellants are liquid at room temperature, Earth-storable, and hypergolic.
- Propellant quantities are monitored on panel O3.
- Most RCS control switches are distributed over panel O7 and O8.
- Thermal control switches are located on panel A14.
- RCS information display and control is through the DISP 19 GNC SYS SUMM 2, SPEC 23 RCS, and SPEC 51 BFS OVERRIDE displays.

RCS Rules of Thumb

- 1% RCS prop = 1 fps ΔV.
- 1% RCS prop = 22 lbs.
- 1,000 lbs of ARCS prop moves X c.g. 1.2 in, Y c.g. $\pm$ 0.4 in.
- 1,000 lbs of FRCS prop moves X c.g. –3.5 in.
- ARCS max blowdown qty 24%.
- FRCS max blowdown qty 22%.
- Loss of a single downfiring vernier jet is loss of vernier mode.
- If fuel tank pressure is 20 psi higher than the oxidizer tank pressure, then verniers are no-go.
- Always secure the RCS from the manifolds to the helium tanks.
- Always open the RCS from the helium tanks to the manifolds.

2.21 SPACELAB

CONTENTS

Description 2.21-1
Module 2.21-3
Pallet 2.21-5
Instrument Pointing Subsystem 2.21-5
Flight Deck Interfaces 2.21-6
Electrical Power 2.21-6
Command and Data Management System 2.21-11
Module Environmental Control and Life Support 2.21-14

Description

Spacelab is a mission-specific, non-deployable payload that is carried in the orbiter's payload bay. Spacelab was developed to be modular, and it can be varied to meet specific mission requirements. Its four principal components are the man-rated module, one or more open pallets that expose materials and equipment to space, a tunnel to gain access to the module, and an instrument pointing system.

Several terms that delineate crew roles and responsibilities on Spacelab flights are described below.

Payload Commander

A payload commander is an experienced mission specialist who has been designated to represent FCOD and the Astronaut Office on a Spacelab or complex payload flight. This individual will have full authority to work with the payload mission managers to identify and resolve issues associated with payload assignment and integration, training, crewmember qualification, and operational constraints.

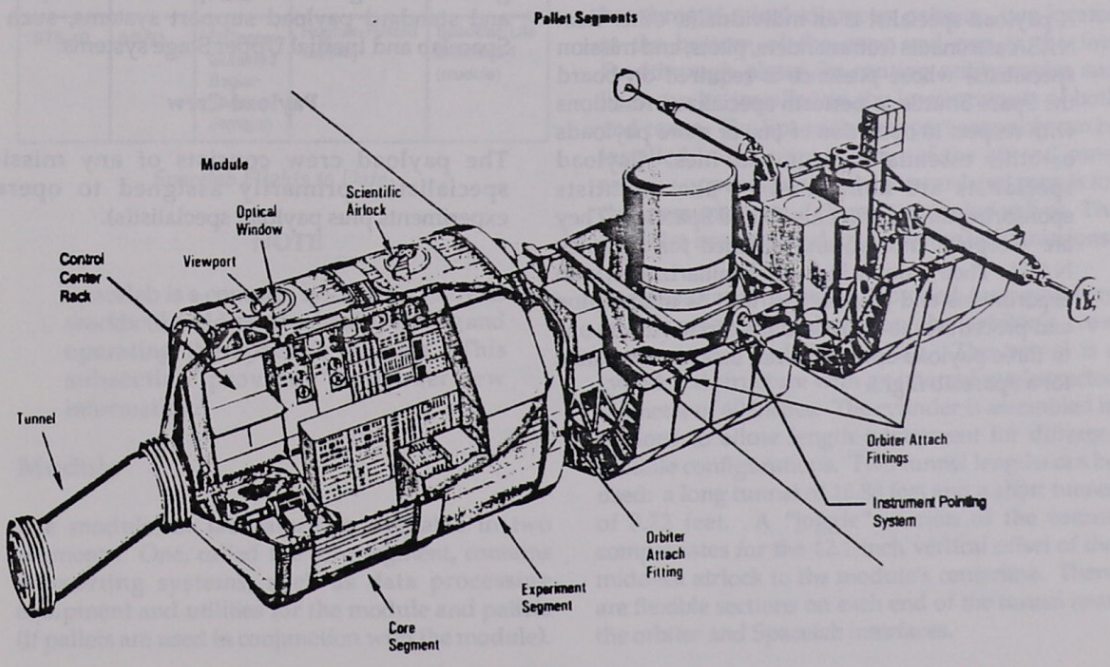

European Space Agency's Spacelab

Mission Specialist

A mission specialist is a career NASA astronaut trained and skilled in the operation of Space Shuttle systems related to payload operations and thoroughly familiar with the operational requirements and objectives of the payloads with which the mission specialist will fly. The mission specialist, when designated for a flight, will participate in the planning of the mission and will be responsible for the coordination of the overall payload/Space Shuttle interaction. The mission specialist will direct the allocation of Space Shuttle and crew resources to the accomplishment of the combined payload objectives during the payload operations phase of the flight in accordance with the approved flight plan. The mission specialist will have prime responsibility for experiments to which no payload specialist is assigned and will assist the payload specialist when appropriate.

Science Mission Specialist

A science mission specialist is a career NASA astronaut assigned as an additional crewmember on a science intensive mission.

Payload Specialist

A payload specialist is an individual(s) other than NASA astronauts (commanders, pilots, and mission specialists) whose presence is required on board the Space Shuttle to perform specialized functions with respect to operation of one or more payloads or other essential mission activities. Payload specialists are nominated by the scientists sponsoring the experiments aboard Spacelab. They are accepted, trained, and certified for flight by NASA. Their training includes familiarization with experiments and payloads as well as information and procedures to fly aboard the orbiter. From one to three payload specialists can be accommodated for a Spacelab flight.

Space Flight Participant

A space flight participant is an individual selected from outside the career NASA astronaut corps whose presence on board is not required for primary payload mission success, but is determined by the Administrator of NASA to contribute to other approved NASA objectives or to be in the national interest.

Crew

The crew includes all personnel authorized to fly on a Space Shuttle flight (commander, pilot, mission specialist(s), payload specialist(s), space flight participant(s), and others as defined by specific NASA agreements).

Flight Crew

The flight crew normally consists of the commander, pilot, and mission specialist(s). The responsibility for on-orbit management of orbiter systems and attached payload support systems and for extravehicular activity and payload manipulation with the remote manipulator system will rest with the flight crew since extensive training is required for safe and efficient operation of these systems. In general, the flight crew will operate orbiter systems and standard payload support systems, such as Spacelab and Inertial Upper Stage systems.

Payload Crew

The payload crew consists of any mission specialist(s) primarily assigned to operate experiments plus payload specialist(s).

Spacelab Mission Summary

Six Spacelab missions have been flown to date. They are summarized in the table below.

FLIGHT	LAUNCH DATE	FLIGHT CREW	PAYLOAD SPECIALISTS	PAYLOAD
STS-9	11/28/83	Young Shaw Parker Garriott	Merbold Lichtenberg	Spacelab 1 (module)
STS-51B	4/29/85	Overmyer Gregory Lind Thagard Thornton	van den Berg Wang	Spacelab 3 (module)
STS-51F	7/29/85	Fullerton Bridges Musgrave England Henize	Acton Bartoe	Spacelab 2 (pallet)
STS-61A	10/30/85	Hartsfield Nagel Dunbar Buchli Bluford	Messerchmid Furrer Ockels	German D-1 (module)
STS-35	12/2/90	Brand Gardner Lounge Hoffman Parker	Durrance Parise	Astro-1 (pallet)
STS-40	6/5/91	O'Connor Guiterrez Bagian Seddon Jernigan	Hughes-Fulford Gaffney	Spacelab Life Sciences 1 (module)

Spacelab Flights to Date

NOTE

Spacelab is a complex system, and several workbooks address the details of using and operating the Spacelab systems. This subsection provides only overview information.

Module

The module, or laboratory, is available in two segments. One, called the core segment, contains supporting systems, such as data processing equipment and utilities for the module and pallets (if pallets are used in conjunction with the module). The laboratory has floor-mounted racks and a workbench. The second, called the experiment segment, provides more working laboratory space and contains only floor-mounted racks. When only one segment is needed, the core segment is used. Each segment is a pressurized cylinder 13.5 feet in outside diameter and 9 feet long. When both segments are assembled with end cones, their maximum outside length is 23 feet.

The module is structurally attached to the orbiter payload bay by four attach fittings consisting of three longeron fitting sets (two primary and one stabilizing) and one keel fitting. Because of the orbiter's center-of-gravity requirements, the module cannot be installed at the forward end of the payload bay. The module is covered with a passive thermal control insulation.

The ceiling skin panel of each segment contains a 51.2-inch-diameter opening for mounting a viewport adapter assembly. If the assembly is not used, the openings are closed with cover plates that are bolted in place. The module shell is made from 2219-T851 aluminum. Forward and aft cones are bolted to the cylinder segments. The end cones are 30.8-inch-long truncated cones whose large end is 161.9 inches in outside diameter and whose small end is 51.2 inches in outside diameter. Each cone has three 16.4-inch-diameter cutouts: two located at the bottom of the cone and one at the top. Feedthrough plates for routing utility cables and lines can be installed in the lower cutouts of both end cones. The Spacelab viewport assembly can be installed in the upper cutout of the aft end cone, and the upper cutout of the forward end cone is for the pressurized module vent and relief valves. The modules are designed for a lifetime of 50 missions.

A pressurized tunnel is provided for equipment and crew transfer between the orbiter's crew compartment and the module. The tunnel is a cylindrical structure with an internal unobstructed diameter of 40 inches. The cylinder is assembled in sections to allow length adjustment for different module configurations. Two tunnel lengths can be used: a long tunnel of 18.88 feet and a short tunnel of 8.72 feet. A "joggle" section of the tunnel compensates for the 42.1-inch vertical offset of the middeck airlock to the module's centerline. There are flexible sections on each end of the tunnel near the orbiter and Spacelab interfaces.

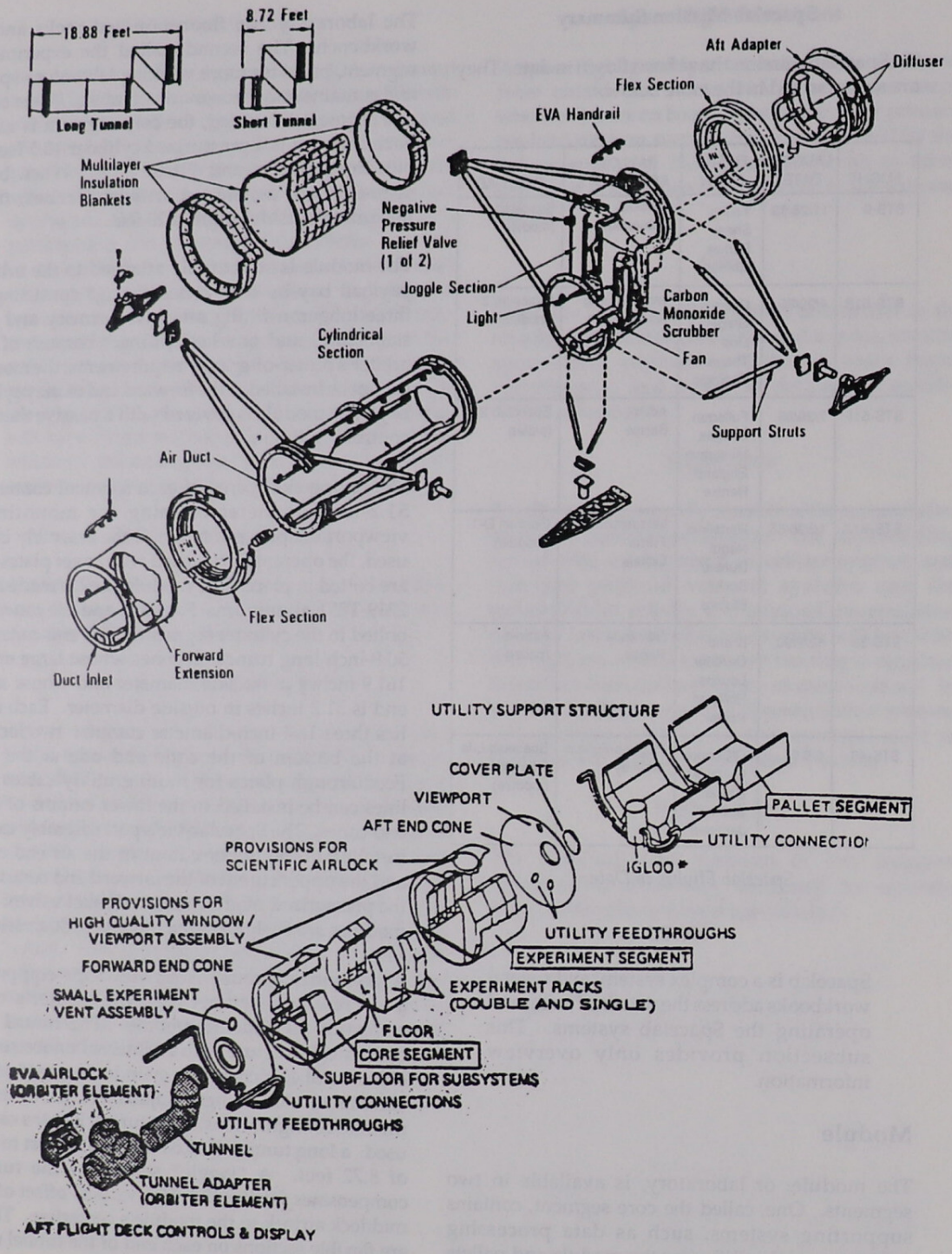

Spacelab Transfer Tunnel

The airlock, tunnel adapter, tunnel, and module are at ambient pressure before launch. The tunnel adapter permits crewmembers outfitted for EVA to transfer from the middeck airlock to the payload bay without depressurizing the orbiter crew compartment and module. If an EVA is required, no crewmembers are permitted in the Spacelab tunnel or module.

Pallet

Each pallet is more than a platform for mounting instrumentation; with an igloo attached, it can also cool equipment, provide electrical power, and furnish connections for commanding and acquiring data from experiments. When only pallets are used, the Spacelab pallet portions of essential systems required for supporting experiments (power, experiment control, data handling, communications, etc.) are protected in a pressurized, temperature-controlled igloo housing.

The pallets are designed for large instruments, experiments requiring direct exposure to space, or systems needing unobstructed or broad fields of view, such as telescopes, antennas, and sensors (e.g., radiometers and radars). The U-shaped pallets are covered with aluminum honeycomb panels. A series of hard points attached to the main pallet structure is provided for mounting heavy payload equipment. Up to five segments can be flown on a single mission. Each pallet train is held in place in the payload bay by a set of five attach fittings, four longeron sill fittings, and one keel fitting. Pallet-to-pallet joints are used to connect the pallets to form a single rigid structure called a pallet train. Twelve joints are used to connect two pallets.

Cable ducts and cable support trays can be bolted to the forward and aft frame of each pallet to support and route electrical cables to and from the experiments and subsystem equipment mounted on the pallet. All ducts mounted on the starboard side of the pallet are used to route subsystem cables, and all ducts on the port side carry experiment utility cables. The ducts and cable trays are made of aluminum alloy sheet metal. In addition to basic utilities, some special accommodations are available for pallet-mounted experiments.

The igloo is attached vertically to the forward end frame of the first forward pallet. Its outer dimensions are approximately 7.9 feet in height and 3.6 feet in diameter. The igloo is a closed cylindrical shell made of aluminum alloy. A removable cover allows full access to the interior. The igloo houses subsystems and equipment in a pressurized, dry-air environment at 14.7 psia. Two feedthrough plates accommodate utility lines and a pressure relief valve. The igloo is covered with multilayer insulation.

Instrument Pointing Subsystem (IPS)

Some Spacelab mission research requires that instruments be pointed with very high accuracy and stability at stars, the Sun, the Earth, or other targets of observation. The IPS provides precision pointing for instruments of diverse sizes and weights (up to 15,432 pounds) and can point them to within 2 arc seconds and hold them on target to within 1.2 arc seconds.

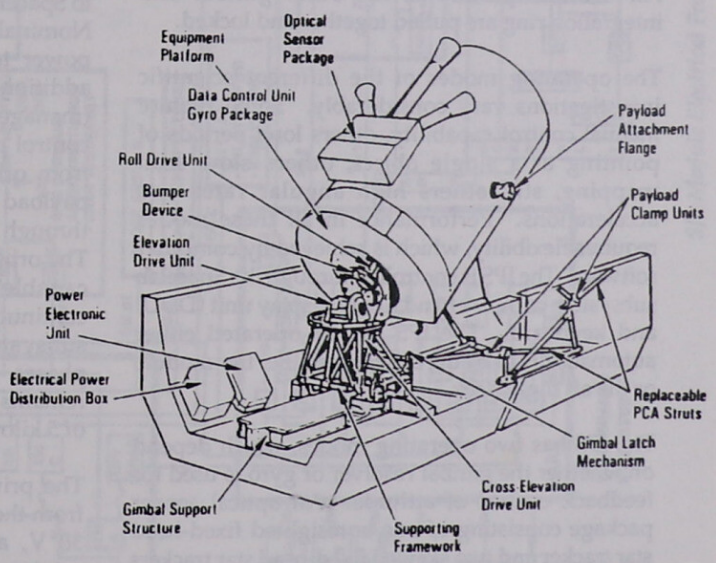

Instrument Pointing System

The IPS consists of a three-axis gimbal system mounted on a gimbal support structure, a payload clamping system, and a control system. The control system is based on the inertial reference of a three-axis gyro package and operated by a gimbal-mounted minicomputer.

The basic structural hardware is the gimbal system, which includes three bearing/drive units, a payload/gimbal separation mechanism, a replaceable extension column, an emergency jettisoning device, a support structure and rails, and a thermal control system. The gimbal structure itself is minimal, consisting only of a yoke, an inner gimbal, and an outer gimbal to which the payload is attached by the payload-mounted integration ring.

The three identical drive units are arranged so that their axes intersect at one point. From pallet to payload, the order of the axes is elevation, cross-elevation, and azimuth. Each drive assembly includes three wet-lubricated ball bearings, two brushless dc-torquers, and two single-speed/multispeed resolvers.

The gimbal/payload separation mechanism is located between the outer gimbal and the payload integration ring. This device prevents the payload and the pointing mechanism from exerting excessive loads on each other during launch and landing. For orbital operations, the outer gimbal and integration ring are pulled together and locked.

The operating modes of the different scientific investigations vary considerably. Some require manual control capability, others long periods of pointing at a single object, others slow scan mapping, still others high angular rates and accelerations. Performance in all these modes requires flexibility, which is achieved by computer software. The IPS is controlled through the Spacelab subsystem computer and a data display unit (DDU) and keyboard. The IPS can be operated either automatically or by the crew from either the module or the aft flight deck.

The IPS has two operating modes, which depend on whether the gimbal resolver or gyro is used for feedback control of attitude. An optical sensor package consisting of one boresighted fixed-head star tracker and two skewed fixed-head star trackers is used for attitude correction and also for configuring the IPS for solar, stellar, or Earth viewing.

Flight Deck Interfaces

The panel configurations vary for module configurations and pallet-only configurations. A module configuration may consist of a payload specialist station DDS at panel L11, a standard switch panel at panel L12, a systems management tone generator and interconnect station at panel L14, a mission specialist station with a data display system and interconnect station at panel R14, and an RAU at the payload station.

A pallet only configuration may consist of a payload specialist station DDS at panel L11, a Spacelab-unique switch panel at panel L12, a video tape recorder at panel R11, a high-data-rate recorder at panel L10, a systems management tone generator and interconnect station at panel L14, a Spacelab power distribution box at panel L14, and a floor-mounted Spacelab RAU at the payload station.

Electrical Power

The Spacelab electrical power distribution subsystem (EPDS) controls and distributes main, essential, control, and emergency dc and ac power to Spacelab subsystems and experiment equipment. Nominally, orbiter fuel cells 2 and 3 provide dc power to main buses B and C respectively. In addition, through the orbiter main bus tie system (managed and controlled from orbiter display and control panels R1 and F9), dc power is distributed from orbiter main bus C to the orbiter primary payload bus and the Spacelab power control box through four (redundant) main dc power feeders. The orbiter electrical power distribution system is capable of distributing 7 kilowatts maximum continuous (12 kilowatts peak) power to Spacelab subsystems and experiments during on-orbit phases. If a single fuel cell fails on orbit, the system remains operational with a maximum power level of 5 kilowatts continuous and 8 kilowatts peak.

The primary dc power received by the Spacelab from the orbiter primary payload bus is nominally 30 V, a maximum of 32 V, and a worst-case minimum of 24 V. The four redundant power feeders from the orbiter supply the Spacelab power

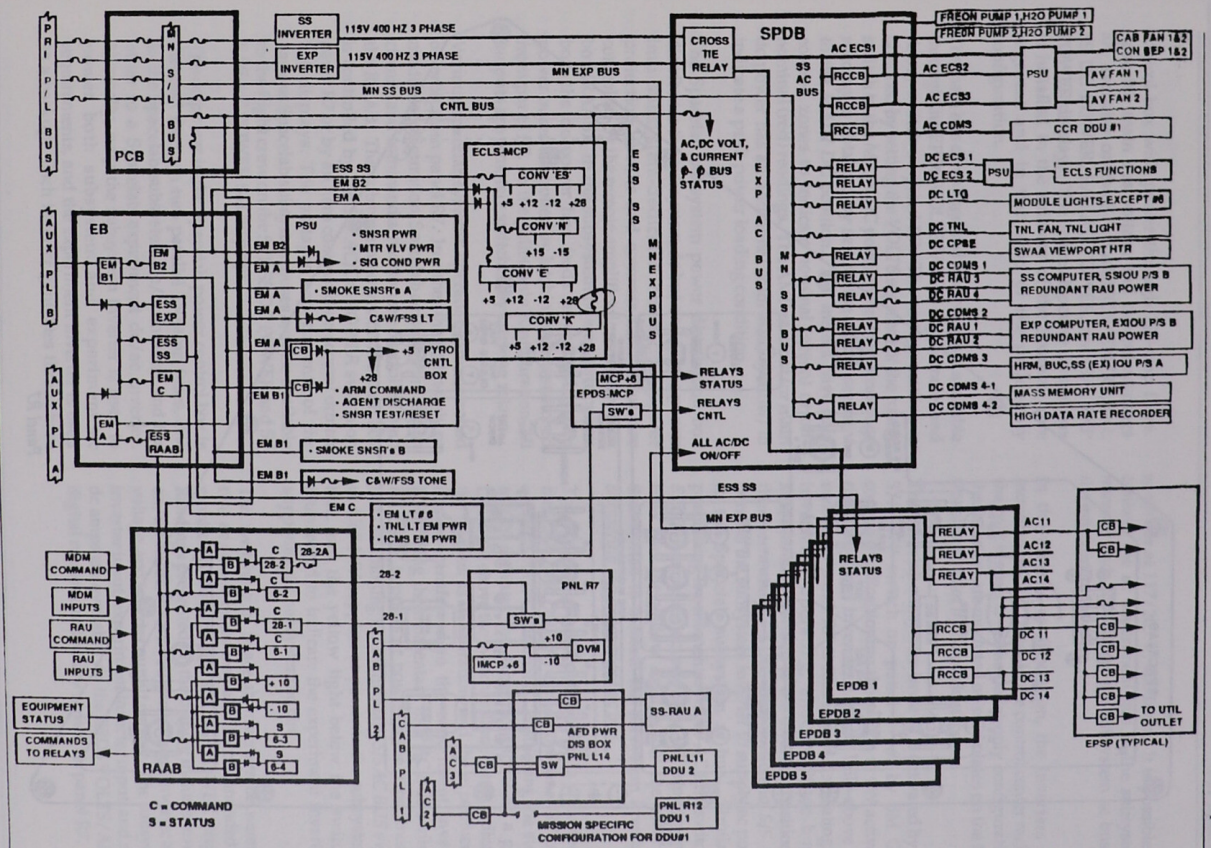

S/L Module Electrical Power Distribution Functional Diagram (1/10/91)

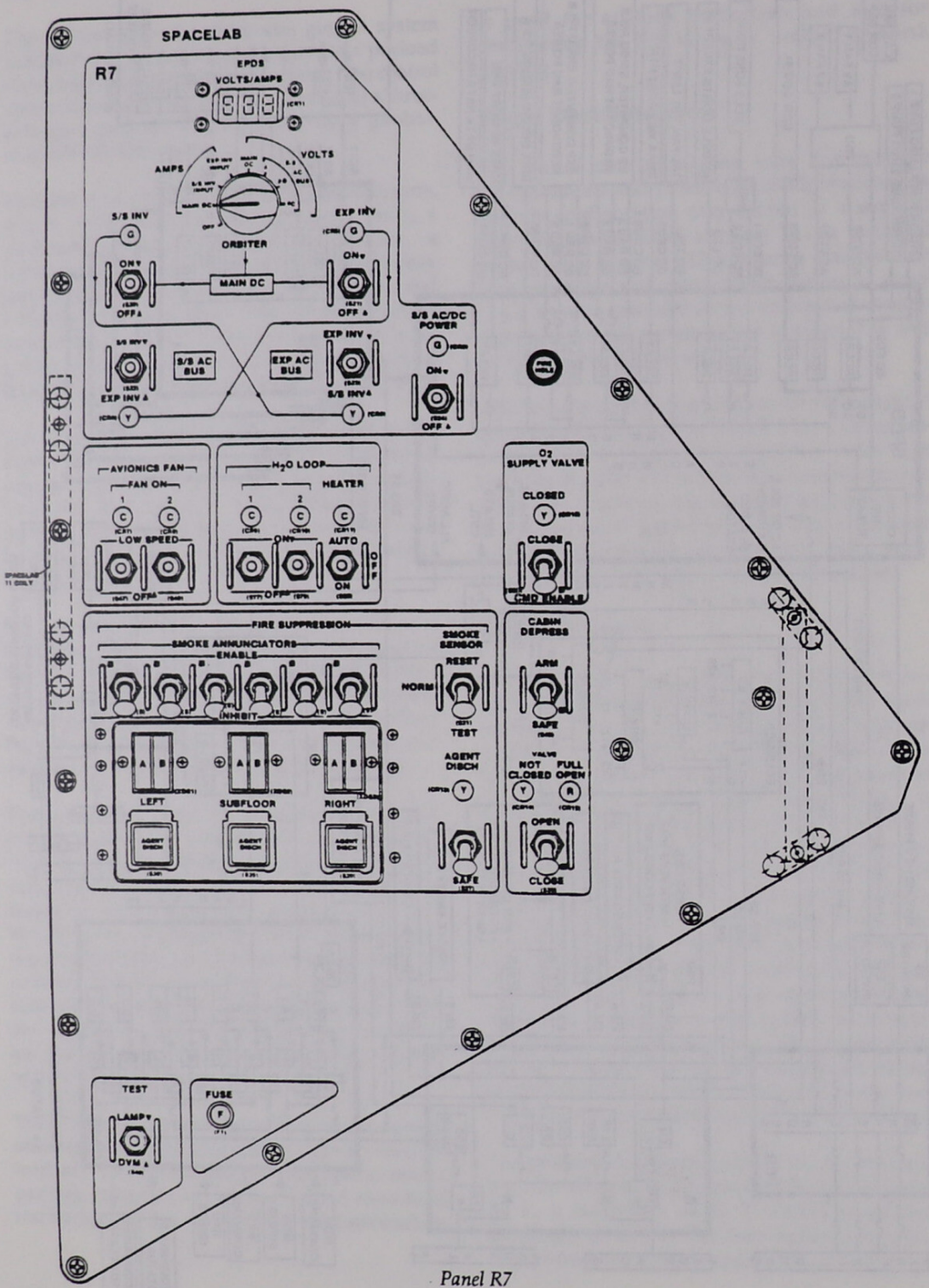
SPACELAB
R7
EPDS
VOLTS/AMPS
AMPS
VOLTS
ORBITER
S/S INV
EXP INV
MAIN DC
ON
OFF
S/S AC BUS
EXP AC BUS
S/S AC/DC POWER
AVIONICS FAN
FAN ON
LOW SPEED
H2O LOOP
HEATER
AUTO
O2 SUPPLY VALVE
CLOSED
CLOSE
CMD ENABLE
FIRE SUPPRESSION
SMOKE ANNUNCIATORS
ENABLE
INHIBIT
SMOKE SENSOR
RESET
NORM
TEST
AGENT DISCH
LEFT
SUBFLOOR
RIGHT
SAFE
CABIN DEPRESS
ARM
VALVE
NOT CLOSED
FULL OPEN
OPEN
CLOSE
TEST
LAMP
DVM
FUSE

Panel R7

control box with power through 125-amp fuses. Spacelab main bus voltage and current readings are available on the S/L LAUNCH/ENTRY, S/L SS DC POWER, S/L AC POWER, and S/L EXP POWER displays. The Spacelab power control box is installed in the subfloor of the Spacelab core segment and in the igloo of the pallet-only configuration.

The main bus dc voltage and amperage are available through the EPDS VOLTS/AMPS digital meter and rotary switch on panel R7. The voltage reading is obtained by setting the *VOLTS* segment of the rotary switch to the *MAIN DC* position, and the amperage reading is obtained by setting the *AMPS* segment to the *MAIN DC* position. The meters have only colored zones to indicate nominal (green) or off-nominal (red) readings. The AMP readout for main dc power has an additional color field (yellow) to indicate a peak power loading condition.

The Spacelab subsystem power distribution box distributes the subsystem dc bus and ac bus power into subsystem-dedicated buses. Ac power protection circuits and command activation are controlled by the remote amplification and advisory box (RAAB). In the subsystem power distribution box, the dc power line feeds several subsystem power buses controlled by latching relays switched from panel R7. In the pallet-only configuration, all outputs are remotely switched by latching relays.

Various Spacelab systems' operations are controlled on orbit from panel R7. In either the pallet-only or module configuration, Spacelab ac power protection circuits and command activation are controlled from the RAAB. The subsystem power distribution box is controlled by the *S/S AC/DC POWER* switch on panel R7 or by an item command on several orbiter SM displays. The voltages and currents of the various Spacelab subsystem buses are also available to the flight crew on the S/L SS DC POWER and S/L SS AC POWER SM displays.

The dc power in the Spacelab power control box is directed through two parallel 150-amp fuses, one to the Spacelab subsystem dc/ac inverter and the other to a Spacelab experiment dc/ac inverter. Normally, only the subsystem inverter is used to power both subsystem and experiment ac requirements, and the experiment inverter is used as a backup. Each inverter generates three-phase ac power at 117/203 V, 400 hertz. It is possible to connect the ac experiment bus to the subsystem inverter and, conversely, the subsystem ac bus to the experiment inverter.

In the module configuration, the inverters are mounted on cold plates in the control center rack of the core segment. In the pallet-only configuration, the inverters are mounted on cold plates on the first (forward) pallet in the payload bay.

The Spacelab subsystem inverter is activated by the *S/S INV* switch on panel R7 or by SM GPC command. Positioning the switch to *ON* activates the subsystem inverter, a green LED above the switch on panel R7 is illuminated, indicating the inverter is operating, and the SS ac bus is automatically attached to the inverter. Positioning the momentary *S/S AC BUS* switch to *S/S INV* permits the subsystem inverter to supply ac power to the Spacelab subsystem ac bus. Similarly, positioning the momentary *EXP AC BUS* switch to *S/S INV* supplies ac power to the experiment ac bus, and the yellow light below the switch is illuminated to indicate the subsystem inverter is supplying the experiment ac bus.

The Spacelab experiment inverter is activated by the *EXP INV ON/OFF* switch on panel R7 or by orbiter SM GPC command. Positioning the switch to *ON* activates the experiment inverter, a green LED light above the switch is illuminated, indicating the inverter is in operation, and the experiment ac bus is transferred to the experiment inverter. Positioning the momentary *EXP AC BUS* switch to *EXP INV* supplies ac power to the experiment ac bus. Positioning the momentary *S/S AC BUS* switch to *EXP INV* supplies ac power to the subsystem ac bus, and the yellow light below the switch is illuminated to indicate the experiment inverter is supplying the subsystem ac bus.

The switching of Spacelab inverters between the two ac power buses may also be commanded and monitored through the S/L AC POWER display. Readings presented on the display include inverter on/off status, inverter output voltage, inverter input voltage, and inverter output current. The subsystem inverter input, experiment inverter input, and main dc amps are available via the EPDS VOLTS/AMPS digital readout and rotary switch on panel R7. The

main dc and subsystem ac bus phase A, B, and C voltage also are available via the digital readout and rotary switch on panel R7.

The Spacelab inverters are protected against overvoltage and overcurrent. They are shut down automatically if the voltage exceeds 136 V root mean square (rms) per phase. Current levels are limited to 12 amps rms per phase, and all three phases are shut down if one phase draws a current of 10 amps rms for 120 seconds. The inverter provides current limiting of the outputs by reducing the voltage on each phase to maintain a current below 10 amps.

In the module configuration, the subsystem power distribution box ac bus feeds several Spacelab subsystem power buses controlled by switches on the Spacelab EPDS panel. All functions on this panel can be initiated simultaneously by the *S/S AC/DC POWER* switch on panel R7 or by item commands from orbiter SM displays. The status of the commanded relays is available via orbiter SM displays and indicated by the green LED light above the respective switch on panel R7.

In the pallet-only configuration, subsystem ac bus power feeds several Spacelab subsystems' power buses, which can be initiated by the *S/S AC/DC POWER* switch on orbiter panel R7 or by item commands from the SM displays. The status of the commanded relays is available via SM displays and the green LED light above the respective switches on panel R7.

Emergency and essential dc power for the module configuration is provided by the orbiter auxiliary payload buses A and B to the Spacelab emergency box. The Spacelab emergency box supplies emergency and essential power for Spacelab critical environmental control subsystem sensors and valves, fire and smoke suppression equipment, ECS water line heaters, module emergency lighting, tunnel emergency lighting, the Spacelab intercom system, and the Spacelab caution and warning panel. The outputs are protected by fuses. One separately fused outlet, an experiment essential bus, is dedicated to experiments. This power is available during all flight phases and when degraded power is delivered to Spacelab. The Spacelab emergency box is located in the subfloor of the core segment.

Emergency and essential dc power for the pallet-only configuration is also provided by orbiter auxiliary payload buses A and B, which send dc power to the Spacelab emergency box located in the igloo. The Spacelab emergency box provides emergency or essential power to Spacelab subsystem equipment. The outputs are protected by fuses. One separately fused outlet, an experiment essential bus, is dedicated to experiments. This power is available during all flight phases and when degraded power is delivered to Spacelab.

In the module configuration, experiment power distribution boxes provide distribution, control, and monitoring facilities for the experiment electrical power distribution system. The experiment electrical power distribution system consists of a nominal redundant 28-volt experiment main dc supply and a 115-volt, 400-hertz ac experiment supply. One distribution box (EPDB 1) is located under the core segment floor on a support structure; for the long module configuration, two additional units (EPDBs 2 and 3) are installed. In the pallet-only configuration, the experiment power distribution box is mounted with other assemblies with an adapter plate on a cold plate that is fitted on a support structure and attached to the pallet.

The orbiter SM displays present emergency and essential bus current, voltages for auxiliary buses A and B, output voltages for Spacelab subsystem emergency buses, output voltage for the Spacelab subsystem essential bus, and output voltage for the RAAB essential bus. The SM displays for activation/deactivation, subsystem dc power, and system summary indicate an undervoltage condition for auxiliary buses A and B. Nominal auxiliary bus amperage from the orbiter can be monitored on the EPDS VOLTS/AMPS meter (color zone only) on panel R7.

In the pallet-only configuration, the orbiter SM displays include emergency and essential bus current, voltages for auxiliary buses A and B, output voltages for Spacelab subsystem emergency buses, output voltage for the Spacelab subsystem essential bus, and output voltage for the RAAB essential bus. The orbiter SM displays will indicate an undervoltage condition for auxiliary buses A and B.

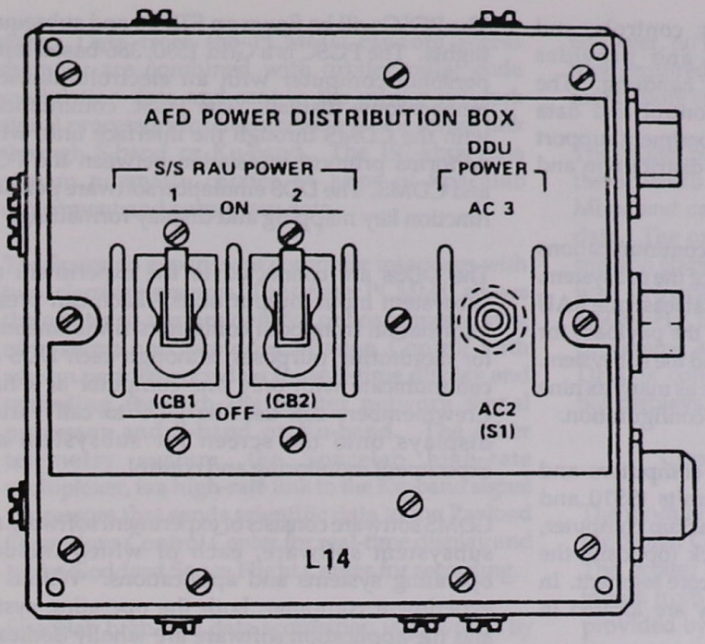

Panel L14

The aft flight deck (AFD) power distribution box (L14) distributes dc and ac power to the Spacelab subsystem remote acquisition unit (RAU) and the Spacelab data display system (DDS) (a DDU and keyboard). When a Spacelab DDS is installed at the mission specialist station, ac power is provided from orbiter ac bus 2.

Spacelab subsystem RAU A dc power comes from orbiter fuel cell 1 main bus A through cabin payload bus 1 and 2 or from orbiter fuel cell 2 main bus B. This power is not affected by the *KILL* switch of the primary payload bus. The AFD power distribution panel L14 *S/S RAU POWER 1 ON/OFF* and *S/S RAU POWER 2 ON/OFF* circuit breakers are used to feed power to the RAU from either bus.

The ac power supplied to the DDS from orbiter ac buses 2 and 3 is controlled by positioning the panel L14 *DDU POWER* switch to *AC2* or *AC3*. This 115-volt ac, three-phase, 400-hertz power is available only during on-orbit flight phases. Panel L14 provides no fuse protection.

In the pallet-only configuration, ac power is supplied to the Spacelab pallet or pallets from orbiter ac buses 2 and 3 by positioning the panel L14 *DDU POWER* switch to *AC 2* or *AC 3*. This power (115 V ac, three phase, 400 hertz) is available only during on-orbit flight phases.

In the module, the experiment power switching panel provides facilities for branching and switching dc and ac power delivered by a dedicated experiment power control box. The dc and ac output is distributed to experiments and experiment-supporting RAUs (dc only). The number of switching panels and their locations depend on the mission configuration.

Command and Data Management System

The Spacelab command and data management system (CDMS) provides a variety of services to Spacelab experiments and subsystems. Most of the CDMS commands are carried out through the use of the computerized system aboard Spacelab, called the data processing assembly (DPA). The DPA formats telemetry data and transfers the information to the orbiter for transmission, receives command data from the orbiter and distributes them to Spacelab subsystems, transfers data from the orbiter to experiments, and distributes timing signals from the orbiter to experiments.

The CDMS includes three identical IBM AP 101-SL computers and assorted peripherals. One computer is dedicated to Spacelab experiments, one supports Spacelab subsystems, and the third is a backup that can function in place of either. The flight crew monitors and operates Spacelab subsystems and payload experiments through data display and keyboard units. The computers have a main memory capacity of 512k 16-bit words. The

experiment computer activates, controls, and monitors payload operations and provides experiment data acquisition and handling. The subsystem computer provides control and data management for basic Spacelab experiment support services, such as electrical power distribution and equipment cooling.

An input/output unit buffers all communications between the computer and the rest of the subsystem. The experiment computer also has at least one RAU (and as many as 20, depending on the payload) for interfacing between experiments and the subsystem. The subsystem computer may have as many as nine RAUs, depending on the Spacelab configuration.

The experiment and subsystem computers and their associated input/output units (SS10 and EX10 respectively), as well as the backup computer, are located in the workbench rack (opposite the control center rack) of the module core segment. In the pallet-only configuration, they are located in the igloo.

Mass Memory Unit (MMU)

The MMU is a tape recorder that contains all of the operating system and applications software for the subsystem and experiment computers. The memory unit provides the initial program load for the Spacelab subsystem, experiment, and backup computers; it can also be used to completely reload computer memory if required. The MMU stores various files, time lines, and displays. Writing onto the unit during flight is possible. Approximately half of the unit's storage capability is available for software and data supporting Spacelab experiments.

Data Display Systems

The data display systems (DDSs) are the primary onboard interface between the CDMS and the crew. Each DDS consists of a payload and general support computer, an interface unit, and DDS emulation software. In a module configuration, one DDS is located in the orbiter aft flight deck station (L11), one in the control center rack in the module, and, possibly, one in an experiment rack in the module. In the pallet-only configuration, two DDSs can be located in the crew compartment aft flight deck station (L11 and R12).

The PGSC will be flown on STS-50 and subsequent flights. The PGSC is a Grid 1530, 386-based laptop personal computer with an electroluminescent monochrome display. The PGSC communicates with the CDMS through the interface unit, which performs protocol translation between the PGSC and CDMS. The DDS emulation software performs function key mapping and display formatting.

The DDSs are connected to the experiment and subsystem input/output units. Each can present information from both computers simultaneously, for monitoring purposes, although each DDS can communicate with only one computer at a time. Crewmembers can use the DDS to call various displays onto the screen for subsystem and experiment monitoring and control.

CDMS software consists of experiment software and subsystem software, each of which includes operating systems and applications. Within the experiment computer, both the operating system and the application software are wholly dedicated to the direct support of Spacelab payload experiments. The experiment computer operating system (ECOS) provides such general services as activation, control, monitoring, and deactivation of experiments, as well as experiment data acquisition, display, and formatting for transmission. Experiment computer application software (ECAS) is developed for experiments that have data handling requirements beyond the capabilities of the operating system.

The subsystem computer functions mainly to monitor and control other Spacelab subsystems and equipment such as the electrical power distribution subsystem and the environmental control subsystem. These functions are performed by the subsystem computer operating software (SCOS).

Orbiter payload multiplexers/demultiplexers (MDMs) PF1 and PF2 are used for data communications between the orbiter GPCs and the Spacelab CDMS computers. The payload MDMs are under orbiter GPC control. The orbiter pulse code modulation master units (PCMMUs) under control of the orbiter computers can access Spacelab data for performance monitoring and limit sensing. The PCMMUs contain a fetch command sequence and a random-access memory for storing fetched

data. Data from the PCMMU random access memory are combined with orbiter pulse code modulation data and sent to the orbiter network signal processors for transmission on the return link through S-band or Ku-band. The 192-kbps data stream normally carries 64 kbps of Spacelab experiment and subsystem data.

The Spacelab experiment computer interfaces with two telemetry systems. The orbiter PCMMU allows the orbiter to acquire data for onboard monitoring of systems and provides Mission Control with system performance data for real-time display and recording through the orbiter network signal processor and S-band or Ku-band. The other telemetry system, the Spacelab high-rate multiplexer, is a high-rate link to the Ku-band signal processors that sends scientific data to the Payload Operations Control Center for real-time display and to the Goddard Space Flight Center for recording.

Spacelab high-rate data acquisition is provided by a high-rate multiplexer (HRM) and a high-data-rate recorder (HDRR). The HRM multiplexes up to 16 experiment channels, each with a maximum of 16 Mbps, two direct-access channels with data rates up to 50 Mbps, data from the Spacelab subsystem computer, experiment data from the Spacelab experiment computer, and up to three analog voice channels from the Spacelab intercom master station in the module configuration. The three digitized channels are premultiplexed onto a single 128-kbps channel for interleaving in the format along with Greenwich Mean Time (GMT) signals from the orbiter master timing unit. This composite output data stream is routed to the Ku-band signal processor for transmission on Ku-band or is sent to one of the two recorders. The HRM is located on the control center rack in the pressurized module and in the igloo for the pallet-only configuration.

In the module, the HDRR is located next to the DDS; in the pallet-only configuration, it is at panel L10. It records real-time, multiplexed data, or data from two direct-access channels, and stores the information at rates from 1 to 32 Mbps during mission periods with no downlink capability or degraded downlink capability for playback when the capability is available. The HDRR dumps in reverse order at 2, 4, 8, 12, 16, 24, or 32 Mbps. At a rate of 32 Mbps, a tape runs for 20 minutes. The recorder can be changed manually by the flight crew; however, no tape changes are planned because the time required to change tapes is very long and it is much more efficient to dump the tape.

The orbiter payload recorder serves as a backup for the Spacelab HDRR for data rates from 0.125 to 1 Mbps and can record only real-time, multiplexed data. The orbiter payload timing buffer provides mission elapsed time and GMT. The master timing unit provides 100-hertz, 1-kHz, 1,024-kHz, and 4,608-kHz timing signals to the Spacelab data processing assembly. Activation of the Spacelab DPA is controlled and monitored from orbiter SM displays.

Closed-Circuit Television (CCTV)

The module has its own CCTV that interfaces with the orbiter CCTV and the Ku-band signal processor. The orbiter CCTV system can accept three video inputs from the Spacelab system. A sync signal is provided by the orbiter, and Spacelab cameras can be commanded and controlled through the orbiter CCTV system. The orbiter also has one video output to the Spacelab CCTV system. The Spacelab accommodates a video switching unit that provides routing and control functions. The Spacelab analog/video output is directed to the orbiter Ku-band signal processor channel 3, payload analog input. Also included as part of the Spacelab CCTV system are different types of video/analog recorders. Data downlinked on Ku-band channel 3 are time-shared by the orbiter's CCTV system, the Spacelab TV/analog output, and the Spacelab high-rate multiplexer data.

Module Intercom

The Spacelab intercom master station interfaces with the orbiter audio central control unit (ACCU) for communications through orbiter duplex (simultaneous talk and listen) audio channels. ACCU loops that can be routed to Spacelab include air/ground 1 and 2, air/air, intercom A and B, C&W tones, and page.

Each orbiter loop, with the exception of page, may be selected on any of three Spacelab channels using rotary switches on the Spacelab intercom master station. One Spacelab channel may in turn be monitored at each intercom remote station. With the addition of audio channel interface units (ACIU)

and Spacelab audio ground isolators (SAGI), channels from two intercom remote stations can be monitored simultaneously and individual channels selectively keyed from a single headset. During normal Spacelab operations, the orbiter A/G 1 loop is used for air-to-ground communications with the Payload Operations Control Center (POCC), A/G 2 is used for orbiter to Mission Control communications and either ICOM A or ICOM B is used for orbiter to module communications. The page channel is used for general address and calling purposes. Page signals can originate in the orbiter, the Spacelab, or both.

The Spacelab talk and listen lines are also routed to voice digitizers in the HRM to provide a redundant downlink only path for the three Spacelab channels.

Module Environmental Control and Life Support (ECLS)

The ECLS consists of the atmosphere storage and control subsystem, the atmosphere revitalization system, and the active thermal control system.

The atmosphere storage and control subsystem receives gaseous oxygen from the orbiter power reactant storage and distribution system and gaseous nitrogen from a tank located on the module's exterior. The system regulates the gaseous oxygen and nitrogen pressure and flow rates to provide a shirt-sleeve environment for the module compatible with the orbiter cabin atmosphere.

Gaseous oxygen enters the module through the upper feedthrough in the Spacelab forward end cone at 100 psi and a maximum flow rate of 14 pounds per hour. A motor-controlled valve in the module controls the flow of gaseous oxygen. This valve, operated by Spacelab RAU commands, opens when the O_2 *SUPPLY VALVE* switch on panel R7 is in the *CMD ENABLE* position, and an item 13 is executed on SPEC 223. It closes when the switch is in the *CLOSE* position or when an item 14 is executed on SM SPEC 223 for such situations as contingency cabin atmosphere dump. A yellow LED above the switch on panel R7 is illuminated to indicate that the valve is closed. The oxygen supply valve receives 28 V from the Spacelab emergency bus.

The gaseous nitrogen is stored in a tank outside the module on the forward end cone. The capacity of the nitrogen tank is sufficient to support a 7-day mission. The GN_2 tank is pressurized to approximately 2300 psi. The GN_2 enters the module via the forward end cone feedthrough via a flow restrictor that restricts the flow to a maximum of 90 pounds per hour. Pressure regulators then regulate the pressure down to 215 psi. Oxygen partial pressure sensors regulate the N_2 or O_2 flow as needed for cabin atmosphere makeup via cabin pressure regulators on the O_2/N_2 control panel located on the forward end cone.

The Spacelab cabin depressurization assembly is primarily for contingency venting to vacuum of Spacelab cabin atmosphere in case of fire that cannot be handled by the Spacelab fire suppression system. The depressurization assembly consists of a vent with two filters, a manual shutoff valve, and a motor-driven shutoff valve. The motor-driven shutoff valve is powered by the Spacelab environmental control subsystem emergency bus and controlled by the *CABIN DEPRESS VALVE OPEN/CLOSE* switch, a *CABIN DEPRESS ARM/SAFE* switch, and valve status LEDs on orbiter panel R7. The *CABIN DEPRESS ARM* switch arms the Spacelab cabin depressurization motor-driven valve; and when the *CABIN DEPRESS VALVE* switch is positioned to *OPEN*, the Spacelab cabin depressurization assembly in the Spacelab forward end cone opens, depressurizing the module at 0.4 pound per second. The red LED above the switch on panel R7 is illuminated to indicate that the motor-operated depressurization valve is fully open. The yellow LED above the switch on panel R7 is illuminated to indicate that the Spacelab cabin depressurization valve is not closed when the *CABIN DEPRESS* switch is in *ARM*, and the *CABIN DEPRESS VALVE* switch is in the *CLOSED* position.

Air in the Spacelab avionics air loop is circulated by one of two dual-redundant fans, with check valves to prevent recirculation through the inactive fan and a filter upstream to protect both fans. For ascent and descent flight phases, as well as low-power modes on orbit, the avionics fans operate when only a few experiments are operating and require cooling.

The fans are designed to switch from four-pole to eight-pole operation. The air flow through one fan is reduced from 1,923 to 639 pounds per hour, and the power is reduced from 643 to 110 watts. The two fans, powered by separate 115-volt ac buses, are activated and deactivated at low speed (eight-pole) by the *AVIONICS FAN* switches on panel R7. Each switch has a yellow LED that is illuminated above the respective switch to indicate that the respective fan is activated. The fans' on/off status is also available on orbiter displays and the DDU avionics power/cooling display.

The Spacelab avionics fans can also be activated in the low-speed mode by commands from the orbiter CRT keyboard. The fans are activated in the high-speed mode (four-pole) by commands from the orbiter CRT keyboards. The orbiter MDM deactivation command deactivates both fans simultaneously, and the Spacelab RAU deactivation command turns off each fan separately. The high-speed status of the Spacelab avionics fans is available on an orbiter SM display and a DDU display.

Module/Tunnel Air Loop

When the middeck airlock hatch and the Spacelab hatch are open, the orbiter air revitalization system provides air at 48 cubic feet per minute through a duct that branches off the orbiter cabin air loop downstream of the orbiter cabin heat exchanger and enters the tunnel adapter. In the tunnel adapter, the duct can be controlled by a manual shutoff valve before it passes into the transfer tunnel itself. For the transfer tunnel to be entered, the Spacelab hatch must be opened, and the duct passes through the structure below the Spacelab hatch, where the duct expands. The fan located in the transfer tunnel draws additional air into the duct through an air inlet located just on the tunnel side of the Spacelab hatch.

The fan draws in additional air at a rate of 77 cubic feet per minute for a total nominal duct flow of 125 cubic feet per minute. This flow rate is delivered to the Spacelab cabin. The return air passes through the transfer tunnel itself, initially at 125 cubic feet per minute. However, 77 cubic feet per minute of air is sucked into the duct inlet at the Spacelab side of the Spacelab hatch, and 48 cubic feet per minute of air enters the orbiter cabin through the middeck airlock hatch. A scrubber in the tunnel duct removes carbon monoxide. The scrubber, located parallel to the tunnel fan, produces an air flow of 1.5 to 4 cubic feet per minute.

The switch for the fan located in the transfer tunnel cannot be accessed until the Spacelab hatch is opened, and the flight crew initially transfers to the Spacelab from the orbiter.

The tunnel fan receives dc power from the Spacelab electrical power distribution subsystem. A delta pressure sensor located in the tunnel provides telemetry data for calculating air flow. If the Spacelab module is operating with the tunnel adapter hatch closed, air exchange is not possible. In this case, the tunnel fan can be used to circulate air at 125 cubic feet per minute in the tunnel.

Module Active Thermal Control Subsystem

The Spacelab active thermal control subsystem consists of a water loop to remove heat from the Spacelab module and a Freon loop to remove heat from equipment on any pallets that may be flown with the module. The water loop is normally active only during on-orbit flight phases, but the need to cool experiments during ascent and descent requires operation of the water loop in a degraded performance mode during these phases.

The Spacelab water loop is circulated by a water pump package consisting of dual-redundant pumps (primary and backup) with inlet filters, manually adjustable bypass valves, check valves to prevent recirculation through the inactive pump, and an accumulator assembly to compensate for thermal expansion within the loop and maintain a positive pump inlet pressure.

The pump package is contained in a housing and mounted on the outside of the module's forward end cone. The nominal flow rate through one pump is 500 pounds per hour.

The Spacelab water pumps are powered by separate 115-volt buses. They are activated and deactivated by the *H_2O LOOP PUMP* switches on panel R7 or by commands from the orbiter SM GPC. The green LED above each switch on panel R7 is illuminated to indicate that the pump is in operation. The on/off status of the Spacelab water pumps is also shown on the orbiter SM displays.

The Spacelab Freon coolant loop removes heat from any pallets that may be flown with the module and transfers the heat of the interloop heat exchanger to the Spacelab water loop system. The flow rate is approximately 3,010 pounds per hour. From the Spacelab water loop system, the water passes through the orbiter payload heat exchanger, which transfers all the heat it has collected to the orbiter Freon coolant loops.

Caution and Warning

The orbiter receives caution and warning inputs from Spacelab through the orbiter payload MDMs. Four channels in the Spacelab systems are dedicated to sending payload warning signals to the orbiter, and four channels in the Spacelab systems send payload caution signals to the orbiter. These channels cause illumination of the *PAYLOAD CAUTION*, *PAYLOAD WARNING*, and *BACKUP C/W ALARM* lights on panel F7. The two *PAYLOAD* lights can be inhibited via panel R13U. Nineteen remaining caution and warning input channels to the orbiter payload MDMs are available for Spacelab experiment limit sensing in the orbiter GPCs. These can feed up to four channels in the caution and warning electronics unit on panel R13U. The orbiter provides a maximum of 36 safing commands for use in response to Spacelab caution and warning conditions with 22 reserved for experiment safing commands. All safing commands are initiated at the orbiter CRT and keyboard.

The orbiter GPC can obtain data from the Spacelab CDMS through the orbiter PCMMU as an alternative source for caution and warning.

Emergency Conditions

There are two categories of Spacelab emergency conditions: fire/smoke in the module, and rapid module depressurization. The orbiter and Spacelab annunciate these conditions and can issue safing commands if they occur. These signals are available during all flight phases.

Redundant Spacelab fire/smoke inputs are generated by two ionization chamber smoke sensors at three locations in the Spacelab. The six fire/smoke discrete signals are hard-wired to six annunciator indicators located on panel R7. These indicators are divided into three pairs labeled *LEFT A* and *B*, *SUBFLOOR A* and *B*, and *RIGHT A* and *B*. The six *SMOKE ANNUNCIATORS* switches on panel R7 can be used to inhibit each fire/smoke sensor's output individually. The *SMOKE SENSOR* switch on panel R7 is used to reset or test all six sensors simultaneously.

O_2 PRESS	H_2 PRESS	FUEL CELL REAC (R)	FUEL CELL STACK TEMP	FUEL CELL PUMP
CABIN ATM (R)	O_2 HEATER TEMP	MAIN BUS UNDERVOLT (R)	AC VOLTAGE	AC OVERLOAD
FREON LOOP (R)	AV BAY/ CABIN AIR	IMU	FWD RCS (R)	RCS JET
H_2O LOOP	RGA/ACCEL	AIR DATA (R)	LEFT RCS (R)	RIGHT RCS (R)
———	LEFT RHC (R)	RIGHT/AFT RHC (R)	LEFT OMS (R)	RIGHT OMS (R)
PAYLOAD WARNING (R)	GPC	FCS SATURATION (R)	OMS KIT	OMS TVC (R)
PAYLOAD CAUTION	PRIMARY C/W	FCS CHANNEL	MPS (R)	———
BACKUP C/W ALARM (R)	APU TEMP	APU OVERSPEED	APU UNDERSPEED	HYD PRESS

Payload Caution and Warning Lights on Panel F7

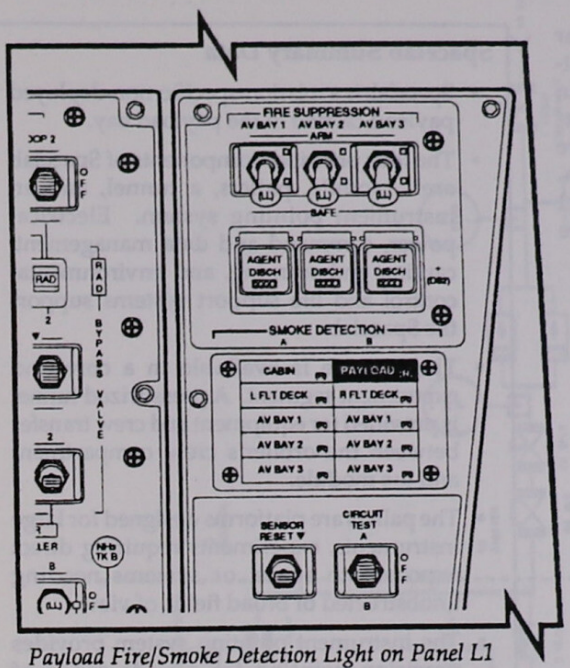

Payload Fire/Smoke Detection Light on Panel L1

Three signals, each from a different sensor location, are run through an OR gate and connected to orbiter panel L1, which has a *PAYLOAD* fire/smoke detection light. The three remaining signals are treated in the same manner.

When a Spacelab fire/smoke signal is detected, an emergency tone (siren) generated by the orbiter caution and warning circuitry is transmitted by the orbiter audio central control unit and announced in the Spacelab module by the loudspeaker, and the Spacelab *MASTER ALARM* light is illuminated. The six fire/smoke signals are also connected to six orbiter MDM inputs for display as emergency alert parameters on the orbiter CRT and for telemetry.

Two methods are provided for extinguishing a fire in the Spacelab module: discharging a fire suppressant into the affected area or dumping the Spacelab cabin atmosphere, when appropriate. The fire suppressant system (FSS) consists of 15 orbiter-common fire suppression bottles, each filled with the Halon 1301 suppressant agent.

The *AGENT DISCHARGE ARM/SAFE* switch on panel R7 or the panel in the C/W/FSS module is used to arm or safe the FSS. Each panel has a yellow indicator light that is illuminated when the FSS is armed. Arming the FSS also shuts off the module cabin fans to avoid diluting the suppressant's concentration.

The agent can be discharged from either orbiter panel R7 or the C&W/FSS panel by three identical sets of *AGENT DISCH* buttons, one each for the left, subfloor, and right areas. The buttons on the C&W/FSS panel are protected by individual guards. Depressing one of these buttons completely discharges the contents of all suppressant bottles in the indicated area of the Spacelab module.

In addition, the module O_2 *SUPPLY VALVE CLOSE/CMD ENABLE* switch on panel R7 can be used to close off the oxygen supply from the orbiter oxygen system to deprive the fire of oxygen. Module atmosphere dumping is controlled by the *CABIN DEPRESS ARM/SAFE* and *VALVE OPEN/CLOSE* switches on orbiter panel R7. The Spacelab motor-controlled cabin dump valve's status is indicated by the yellow *NOT CLOSED* and the red *FULL OPEN* indicators on panel R7, as well as by orbiter SM displays. In addition, the manual cabin depressurization valve on panel F6D must be opened to allow cabin depressurization. The motorized and manual cabin depressurization valves are in series; both must be opened.

Pallet-Only Environmental Control Subsystem

The environmental control subsystem provides thermal control of Spacelab experiments and subsystems. The Spacelab Freon coolant loop services the pallet systems and collects heat dissipated by the subsystem and experiment equipment. The coolant loop collects heat from the pallet-mounted subsystems and experiments through cold plates, some of which have thermal capacitors to store peak heat loads. The cold plates in the Freon loop are bolted to an intermediate support structure that is attached to the pallet. A maximum of eight cold plates can be used on the pallets for a particular mission.

The subsystem equipment mounted in the igloo is also serviced by the Freon loop, which interfaces directly with the orbiter's payload heat exchanger. The Freon pump package is mounted on the front frame of the first pallet (forward) in the orbiter payload bay. Thermal coatings are applied to

minimize heat leakage and the effects of solar radiation. A special paint is used to reduce the hot-case temperature of the pallet structure itself. An insulated shield installed between the pallet-mounted cold plates and the pallet structure reduces radiation exchange between them. Multilayer insulation thermal tents also protect pallet-mounted subsystems; any unused tents are available for experiments.

Spacelab Summary Data

- Spacelab is a mission-specific, non-deployed payload carried in the payload bay.
- The four principal components of Spacelab are: module, pallets, a tunnel, and an instrument pointing system. Electrical power, command and data management, caution and warning, and environmental control and life support systems support the Spacelab.
- The module is available in a core and experiment segment. A pressurized tunnel is provided for equipment and crew transfer between the orbiter's crew compartment and the module.
- The pallets are platforms designed for large instruments, experiments requiring direct exposure to space, or systems needing unobstructed or broad fields of view.
- The instrument pointing system provides precision pointing for a wide range of payloads, including large single instruments, clusters of instruments, or single small-rocket-class instruments.
- The Spacelab electrical power distribution subsystem controls and distributes main, essential, and emergency dc and ac power to Spacelab subsystems and experiment equipment.
- The Spacelab command and data management system of three identical computers and assorted peripherals provides a variety of services to Spacelab experiments and subsystems.
- Spacelab has a separate environmental and thermal control system.
- The majority of Spacelab controls are on panel R7, flown only when Spacelab is flown.
- Spacelab-specific CRT displays include: S/L LAUNCH/ENTRY, S/L COOLING LOOPS, S/L AIR LOOPS, S/L ATMOSPHERE, SL SS DC POWER, SL AC POWER, S/L DPA, S/L DPA PERIPHERAL, S/L LINK MGMT, S/L EXP RAUS, S/L COMM, and S/L EXP POWER.

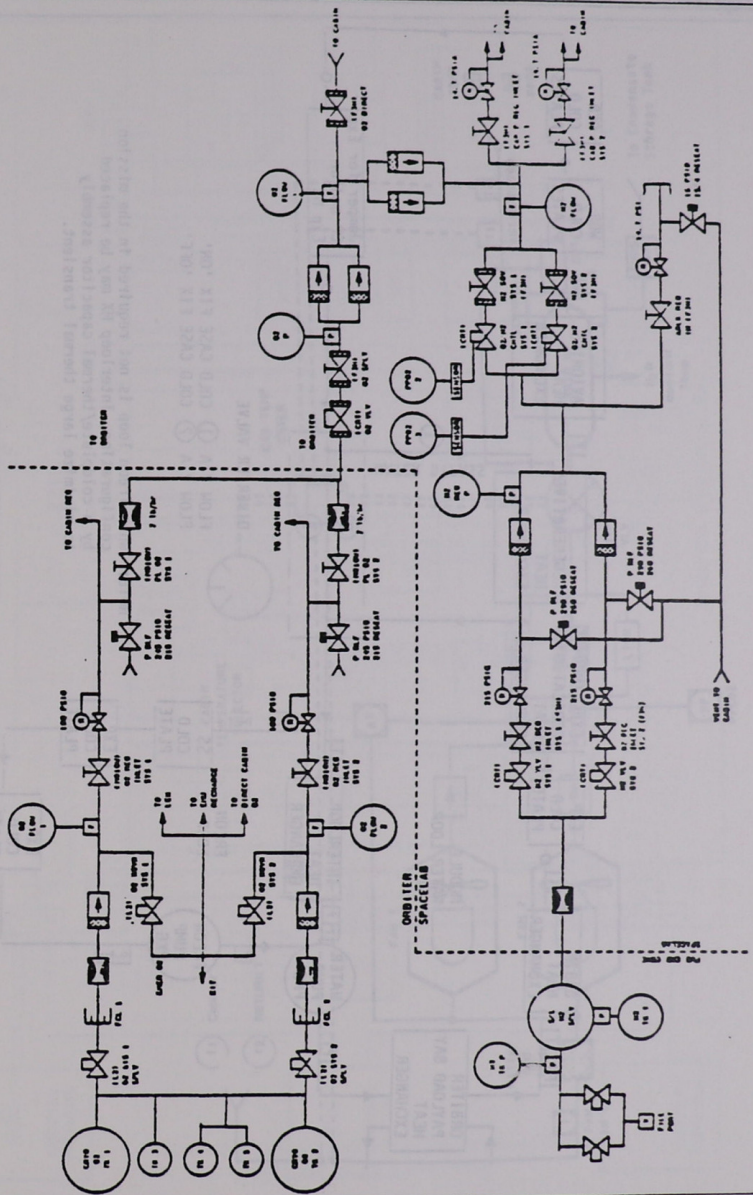

ECLS Spacelab/Orbiter Interface

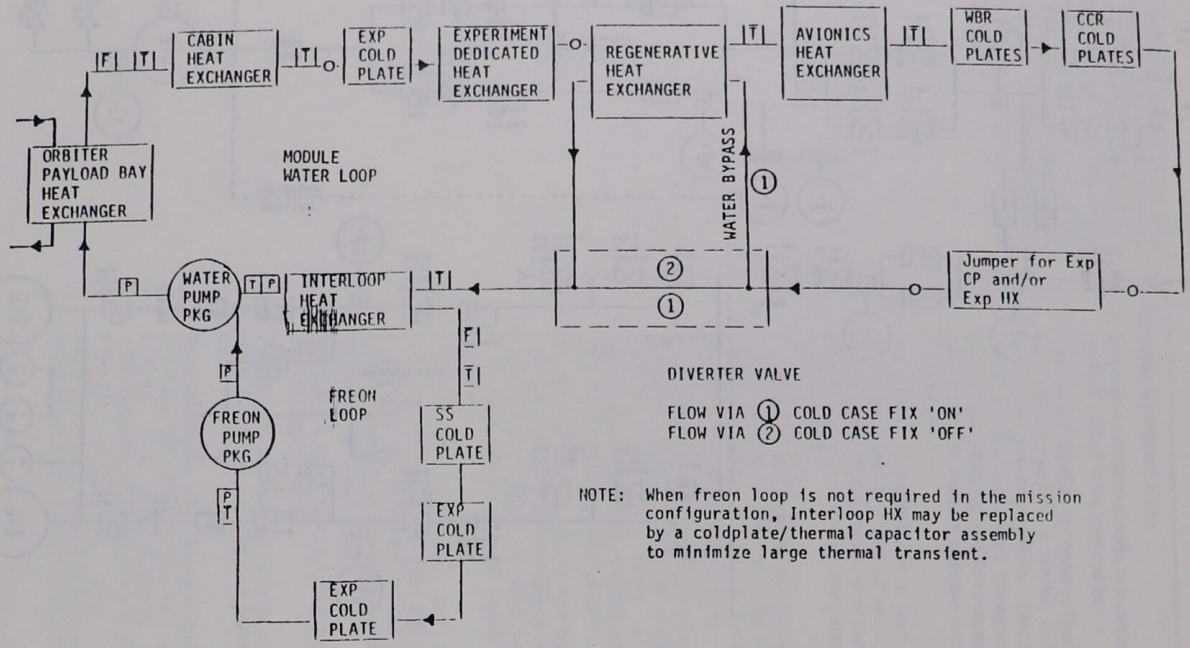

Spacelab Coolant Loops

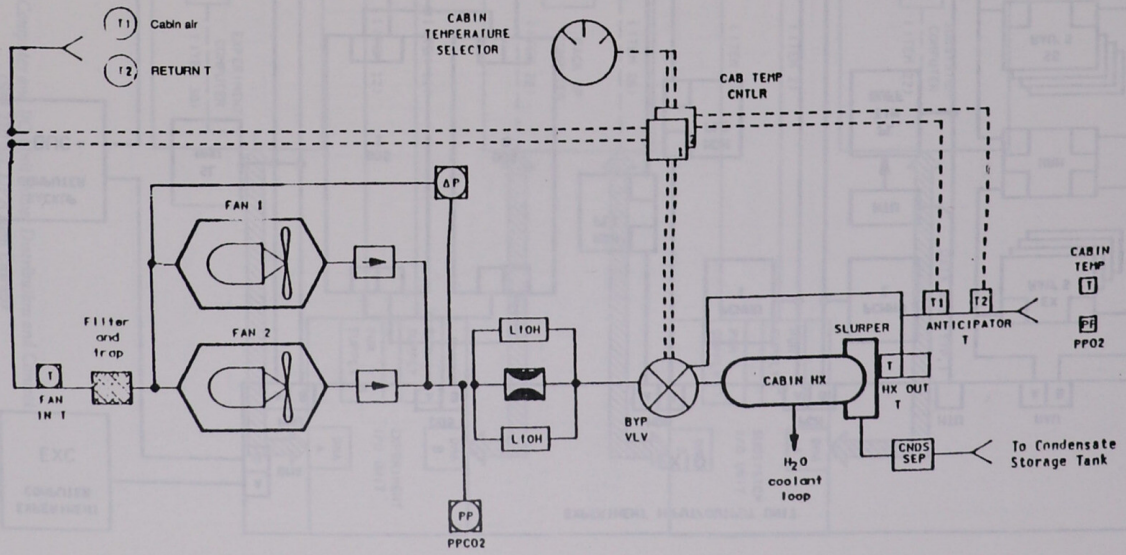

S/L Cabin Air Loop

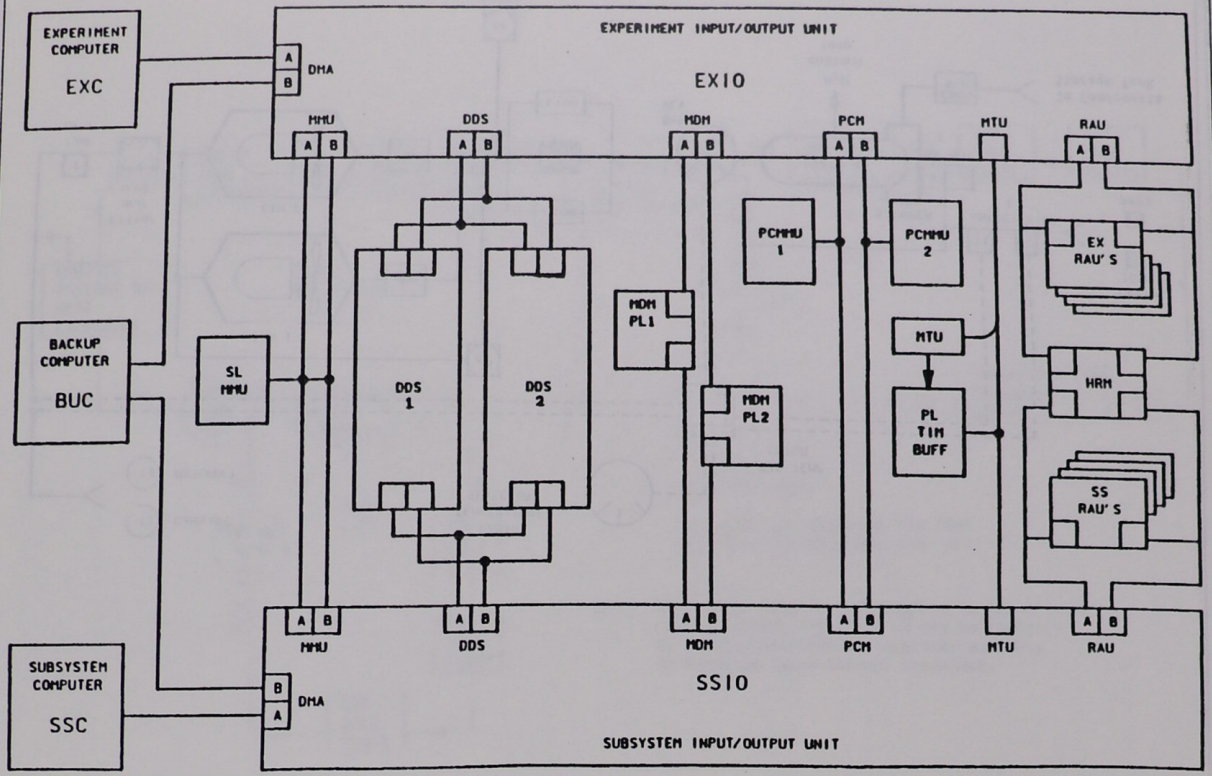

CDMS Redundancy

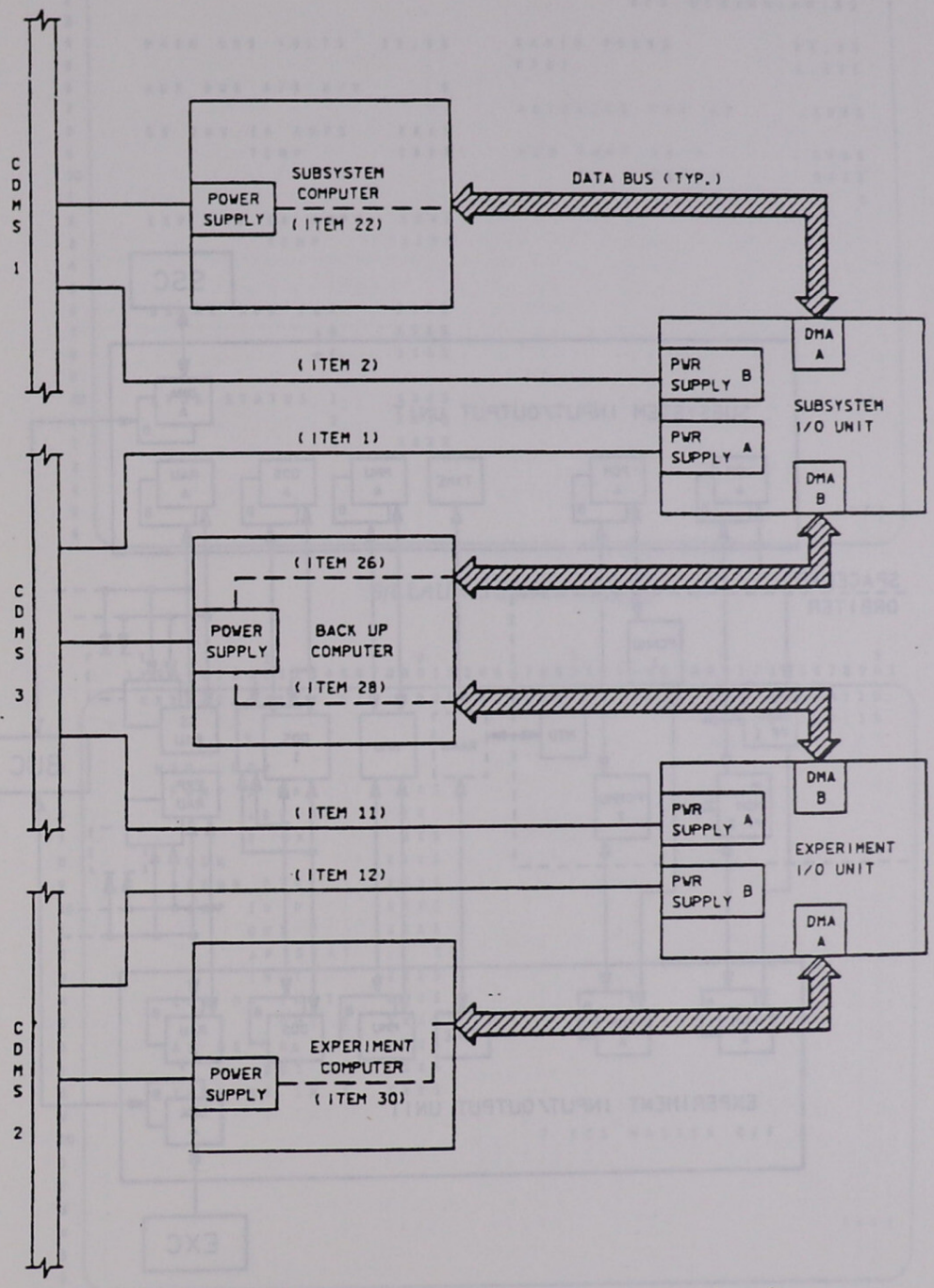

SL Computer and I/O Unit Power Distribution and Control
(SM 210 S/L DPA Item Entries)

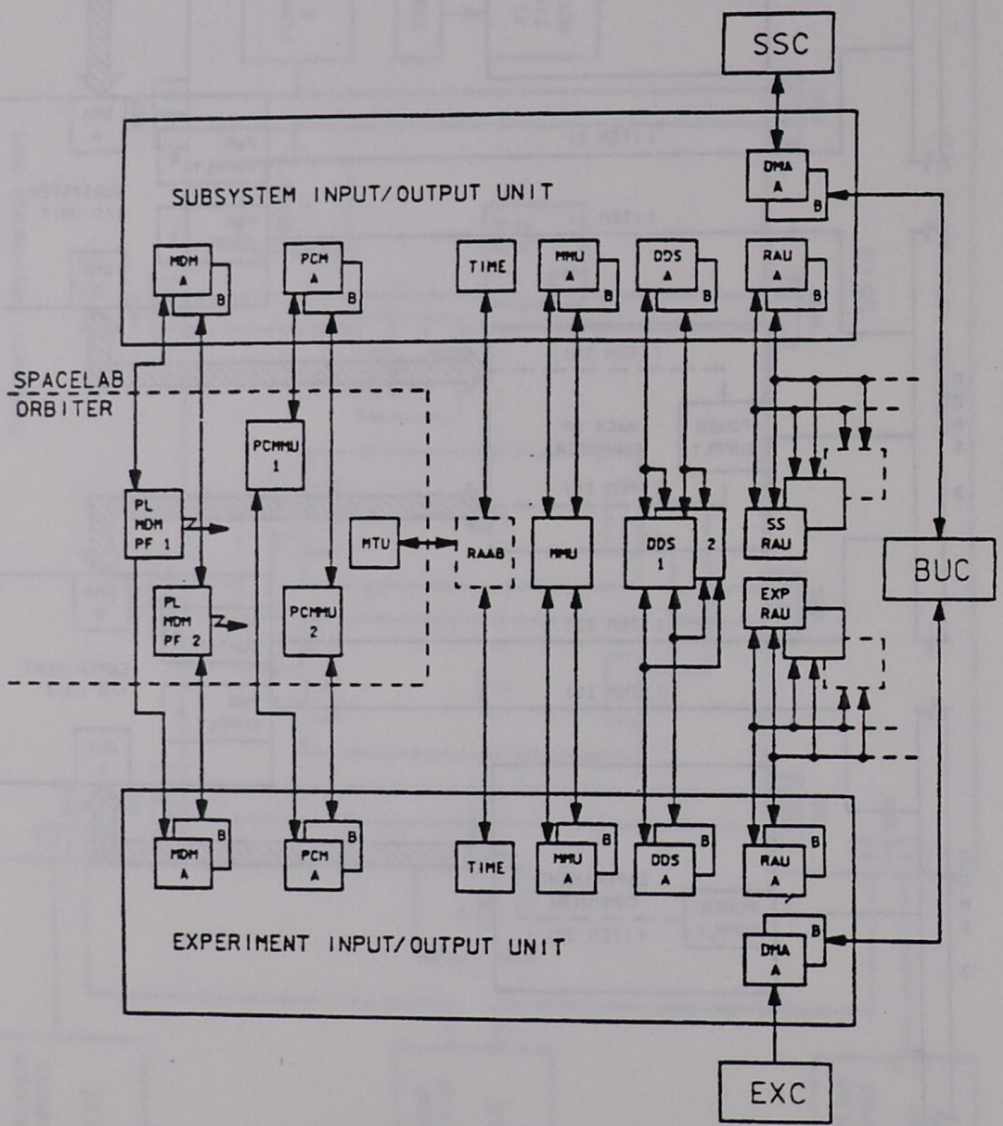

IOU Couplers and Data Buses

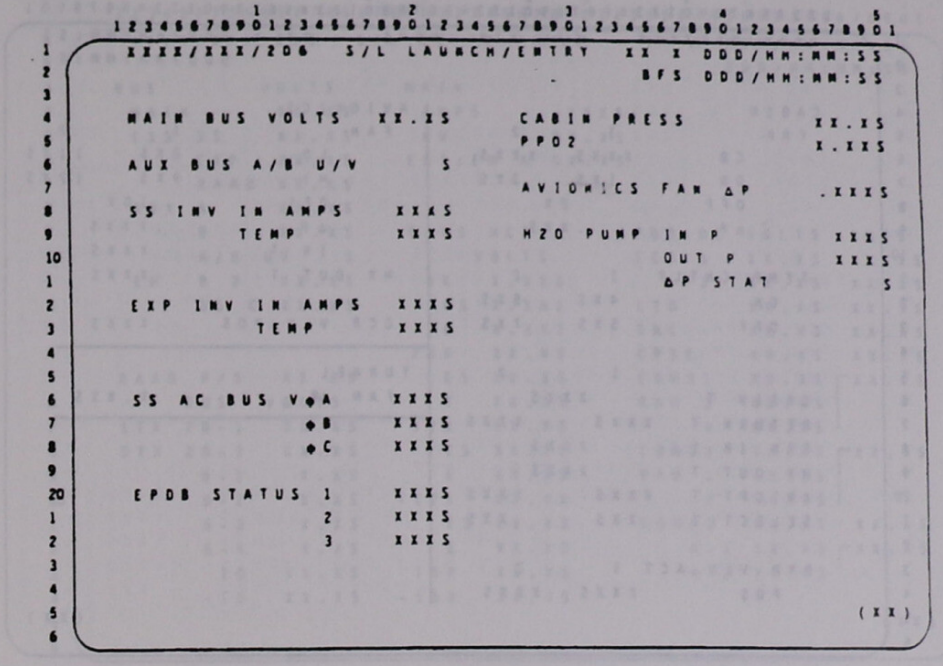

S/L LAUNCH/ENTRY Display

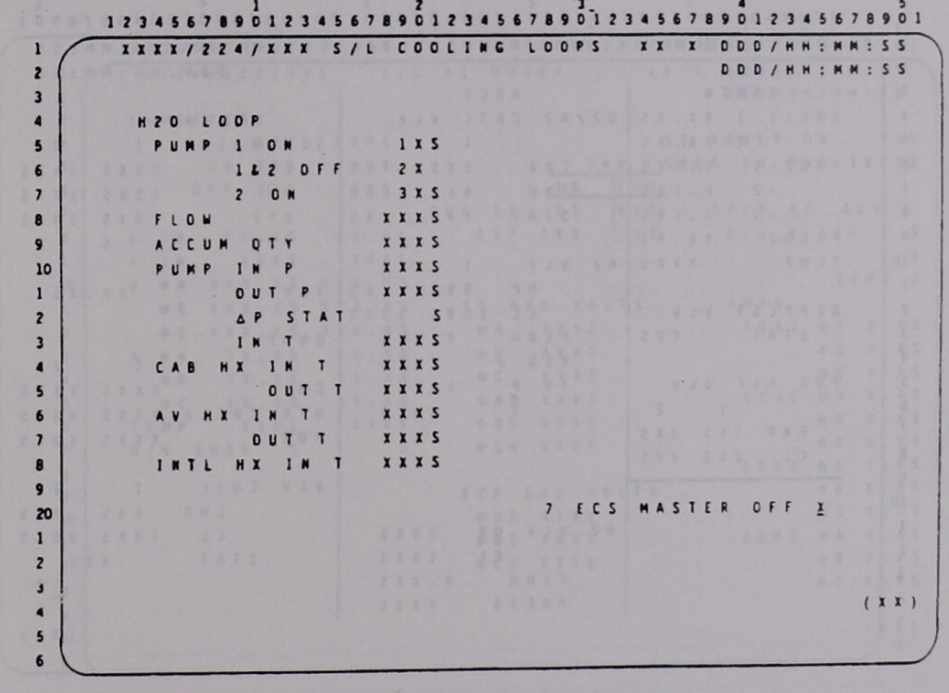

S/L COOLING LOOPS Display

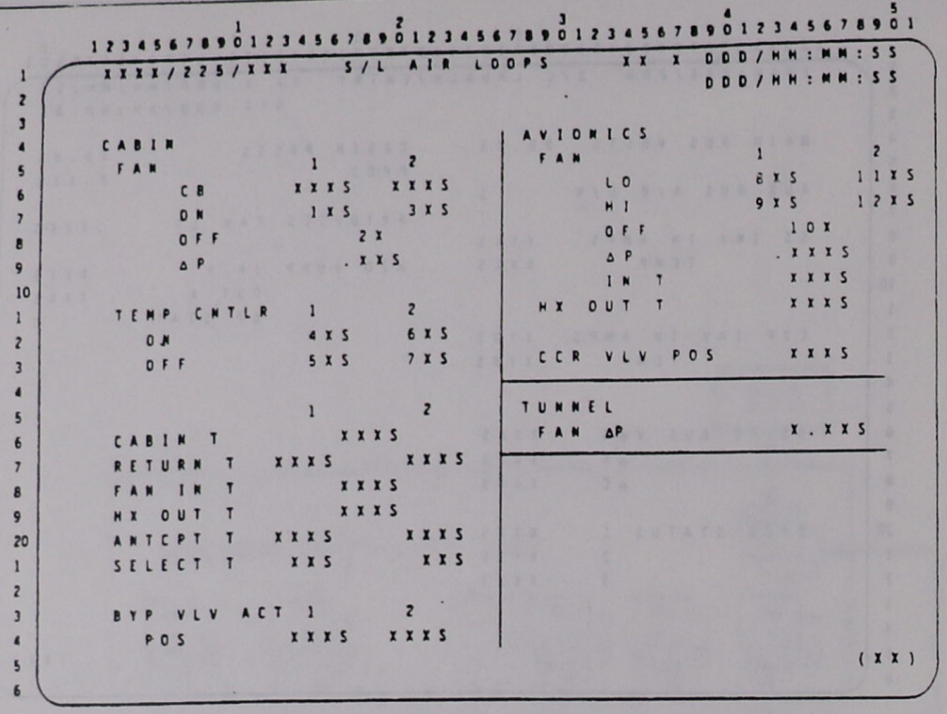

S/L AIR LOOPS Display

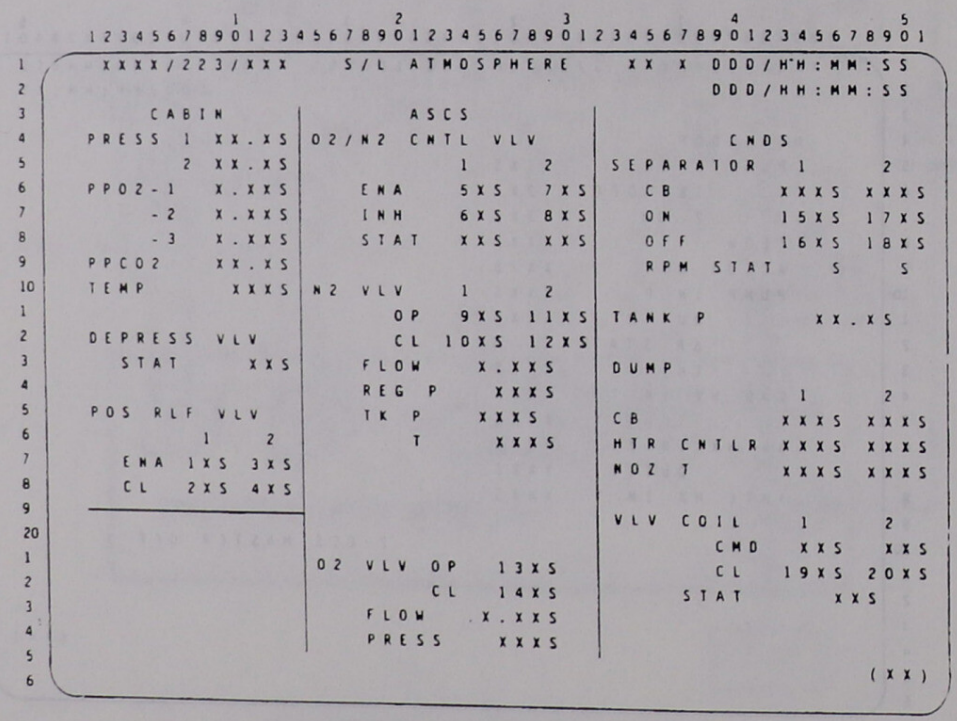

S/L ATMOSPHERE Display

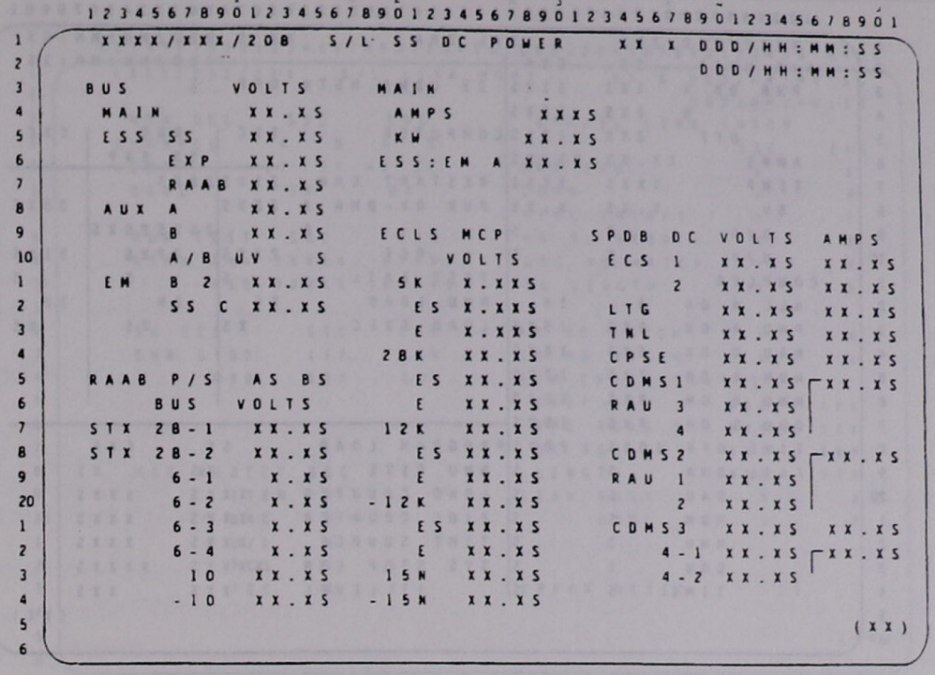

S/L SS DC POWER Display

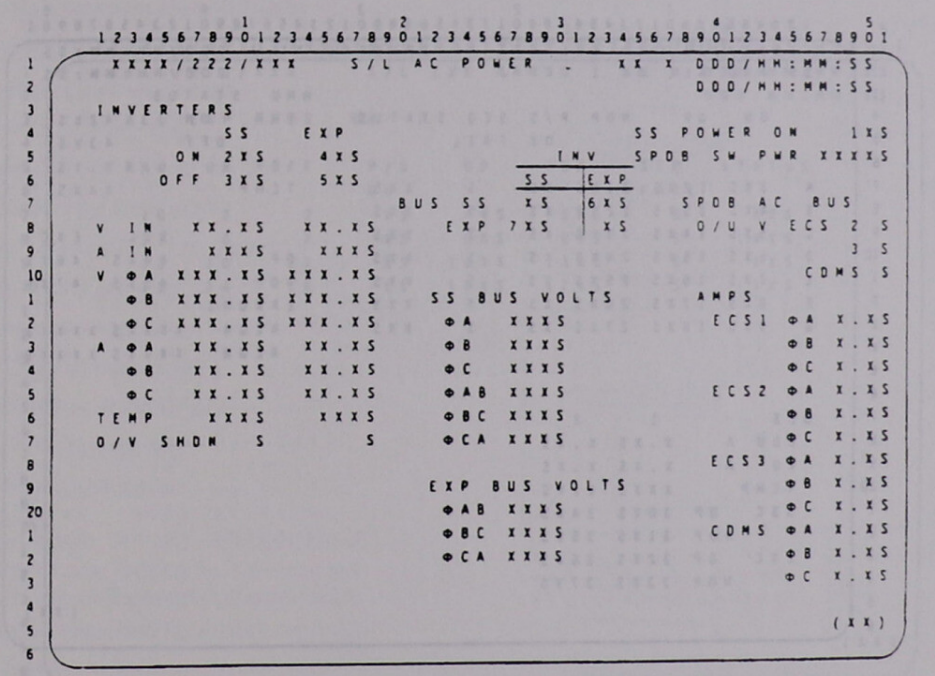

SL AC POWER Display

```
                                                                                
   XXXX/210/XXX                S/L  DPA                        XX  X  DDD/HH:MM:SS
                                                                      DDD/HH:MM:SS
I/O  UNIT        SS    EXP
 PWR  ON  A      1XS   11XS   33  CDMS  MSTR  OFF   X
             B   2XS   12XS
         OFF     3XS   13XS  COMPUTER                SSC     BUC      EXC
                                                          SS  EXP
 AMPS          XX.XS  XX.XS
 TEMP           XXXS   XXXS  RESTART  ENA           21XS  25XS
  5V            X.XS   X.XS  PWR  ON-DMA  A        22XS                30XS
                                                 B        26XS 28XS
   O/A             S      S                             
   U/V             S      S        OFF             23XS   27XS       31XS
                                   TEST  FAIL            S     S          S
COUPLER                            MMU  LOAD          24     29         32
 ALL  A  ON     4      14          LOAD  EXEC             XS     XS         XS
 PMU  B  ON     5XS    15XS
 RAU  B  ON     6XS    16XS
 MDM  B  ON     7XS    17XS
 MMU  B  ON     8XS    18XS
 DDU  B  ON     9XS    19XS
 TIME  OFF     10XS    20XS  PROGRAM  LOAD          SS      EXP
 FAIL  DMA       S       S   MMU  BITE               XS       XS
       RAU       S       S   LOAD  COUNTER        XXXS     XXXS
       MDM       S       S   PIOL  COUNTER        XXXS     XXXS
       MMU       S       S   TIME  SOURCE         XXXS     XXXS
       DDU       S       S   SYS  STOP  ERR      XXXXS    XXXXS
       TIME      S       S         IT  LEVEL        XXS      XXS
                                                                    (XX)
```

S/L DPA Display

```
                                                                                
   XXXX/211/XXX  S/L  DPA  PERIPHERAL          XX  X  DDD/HH:MM:SS
SS  RAU  ALL  ON  1  OFF  2                           DDD/HH:MM:SS
                                                MMU  STATUS
     ON    OP      WOP   P/S  SEQ  STATUS       PWR     ON        42XS
                         OK  FAIL                        OFF       43XS
                                                 5V                 X.XS
 A   3XS   12XS   21XS   XS    S     XXS        TEMP               XXXS
 B   4XS   13XS   22XS   XS    S     XXS
 C   5XS   14XS   23XS   XS    S     XXS                      SSC     EXC
 D   6XS   15XS   24XS   XS    S     XXS        OP            44XS    46XS
 E   7XS   16XS   25XS   XS    S     XXS        WOP           45XS    47XS
 F   8XS   17XS   26XS   XS    S     XXS        ERRORS
 G   9XS   18XS   27XS   XS    S     XXS          REGA    XXXXS XXXXS
                                                 REGB    XXXXS XXXXS
                                                                    
                                                                    
DDS              1       2                                          
  DDU  A       X.XS    X.XS                                         
  KB   A       X.XS    X.XS                                         
  TEMP         XXXS    XXXS                                         
  SSC   OP     30XS    34XS                                         
        WOP    31XS    35XS                                         
  EXC   OP     32XS    36XS                                         
        WOP    33XS    37XS                                         
                                                                    (XX)
```

S/L DPA PERIPHERAL Display

```
1         2         3         4         5
1234567890123456789012345678901234567890123456789012345678901
 XXXX/212/XXX     S/L LINK MGMT -     XX X DDD/HH:MM:SS
                                          DDD/HH:MM:SS

  MDM SEL      SSC      EXC          GPC/SL LINK ERROR
 CHANNEL      A   B    A   B                        SSC     EXC
  ENA        1X  2X   4X  5X     NOP IND             X       X
  DSBL        3X       6X        COMM                X       X
                                 LINK INTRPT         X       X
  MDM TEST    SSC      EXC      NO SL RESP          X       X
  RTRN CHW  7XXXX    8XXXX      GPC NO MATCH        X       X
        MSG 9XXXX   10XXXX      SL LENGTH           X       X

  SV SEL       SSC      EXC     AR NO MATCH         X       X
  ENA GTOD     11X      12X     SR NO MATCH         X       X
        MSO    13X      14X     RIW ERROR STATUS
                                  XMIT RI          XXX     XXX
                                  GPC RCVD RI      XXX     XXX
                                  SL RCVD RI       XXX     XXX
  MSG REJECT SSC EXC              LENGTH           XXX     XXX
        ITEM   X   X        LINK BUSY              X       X
        GNC    X   X              DSBL             X       X
        U/L    X   X
        PCS    X   X
        TEC    X   X      ERROR RESET        15

                                                    (XX)
```

S/L LINK MGMT Display

```
1         2         3         4         5
1234567890123456789012345678901234567890123456789012345678901
 XXXX/213/XXX      S/L EXP RAUS      XX X DDD/HH:MM:SS
                                          DDD/HH:MM:SS

 ALL EXP RAUS  ON  1

 RAU   ON    OFF    P/S     OP     NOP    SEQ   STATUS
                    OK                   FAIL
  10    2      3     XS     4XS    5XS     S      XXS
  11    6      7     XS     8XS    9XS     S      XXS
  13   10     11     XS    12XS   13XS     S      XXS
  15   14     15     XS    16XS   17XS     S      XXS

                                                (XX)
```

S/L EXP RAUS Display

```
                                                                    DDD/HH:MM:SS
XXXX/214/XXX                S/L COMM                    XX  X       DDD/HH:MM:SS

VOICE DIGIT    ENA  INH
  CHAN    1    1XS  4XS
          2    2XS  5XS
          3    3XS  6XS

HRM                                                 HDRR
  PWR   ON      7XS   INP  OVFL                      PWR   ON          19XS
        OFF     8XS   1XS  12XS                           OFF         20XS
      STAT       XS   2XS  13XS                     STAT  EU            XS
      TEMP  ±XXXS   3XS  14XS                           TU            XS
       PS0     9XS   4XS  15XS                     MTR A             X.XS
       PS1    10XS   5XS  16XS                     TEMP              ±XXXS
       PS2    11XS   6XS  VOXS                     RATE  MHZ   2     21XS
  OP   SSC    12XS   7XS  PRXS                           4     22XS
  NOP  SSC    13XS   8XS  HRXS                           8     23XS
  OP   EXC    14XS   9XS  SSXS                          16     24XS
  NOP  EXC    15XS  10XS  EXXS                          32     25XS
  SLF  TEST   16XS  11XS                     MODE  STOP        26XS
   STATUS  XXXXS                                    RCD         27XS
  CUR FMT      XXS                                  PB          28XS
17 LOAD FMT    XXS                                  FFWD        29XS
  EXEC 18                                           RWD         30XS
                                                  *  MOTION    XXXXS
                                                    %TAPE    XXX.XS
                                                    EOT          XS
                                                SELF  TEST      31XS
                                                  STATUS        XXXS

                                                                  (XX)
```

S/L COMM Display

```
                                                                    DDD/HH:MM:SS
 XXXX/220/XXX               S/L EXP POWER            XX  X       DDD/HH:MM:SS

EPDB |    DC          |    AC          | SOVS                    MM  VDC  XX.XS
     |  ON    OFF     |  ON    OFF     | P/C                        KW  XX.XS
  11 |  1XS    2XS    |  3XS    4XS    | L3/4XS                  EXP BUS VOLTS
  12 |  5XS    6XS    |  7XS    8XS    | R3/4XS                   ΦAB   ΦBC   ΦCA
 13/4|  9XS   10XS    | 11XS   12XS    | L5 XS                    XXXS  XXXS  XXXS
     |                |                | R5 XS
  21 | 13XS   14XS    | 15XS   16XS    | R6/7XS          SMOKE
  22 | 17XS   18XS    | 19XS   20XS    | R8/9XS     L  A  XX.XS      EPDB
 23/4| 21XS   22XS    | 23XS   24XS    | R10 XS        B  XX.XS      DC AMPS
  31 | 25XS   26XS    | 27XS   28XS    | L6/7XS  SF  A  XX.XS      1   XXXS
  32 | 29XS   30XS    | 31XS   32XS    | L8/9XS        B  XX.XS      2   XXXS
 33/4| 33XS   34XS    | 35XS   36XS    | L10 XS     R  A  XX.XS      3   XXXS
                                                    B  XX.XS

                                                EPDB  AC AMPS
                                                     ΦA      ΦB      ΦCA
                                                  1 XX.XS   XX.XS   XX.XS
                                                  2 XX.XS   XX.XS   XX.XS
                                                  3 XX.XS   XX.XS   XX.XS
EPDB    1      2      3
  ON   61XS   63XS   65XS
  OFF  62XS   64XS   66XS

                                                                  (XX)
```

S/L EXP POWER Display

2.22 STOWAGE

CONTENTS

Description 2.22-1
Rigid Containers 2.22-1
Flexible Containers 2.22-4

Description

Various provisions are available for stowing loose onboard equipment and trash/waste materials during different phases of the flight. Provisions consist primarily of rigid and flexible containers.

Rigid containers include:

- Flight data file (FDF) containers
- Modular lockers
- Floor compartments
- Volume B return trash containers.

The flexible containers are as follows:

- Middeck stowage bag
- Flight deck stowage bags
- Helmet stowage bag
- Specialist seat FDF containers
- Soft stowage containers
- Trash containers
- Temporary stowage bag
- Jettison stowage bags
- In-flight stowage bags
- Middeck retention net
- Airlock stowage bag
- Airlock retention net.

Stowage areas in the orbiter crew compartment are located in the forward flight deck, the aft flight deck, the middeck, the equipment bay, and the airlock module.

Rigid Containers

FDF Containers

Four permanently mounted lockers, two located to the right side of the CDR seat (C4), and two located to the right side of the PLT seat (R3) provide partial stowage of FDF on the flight deck. Remaining FDF items are stowed in specialist seat FDF containers and in middeck modular stowage lockers. To gain access to the CDR/PLT container contents, the crewmember needs only to lift the latch handle to unlock the lid of the container.

Modular Lockers

Some equipment on board the orbiter is stowed in lockers with insertable trays. The trays can be adapted to accommodate a wide variety of soft goods, loose equipment, and food. The lockers are interchangeable and attach to the orbiter with spring-loaded captive bolts. The lockers can be removed or installed in flight by the crewmembers.

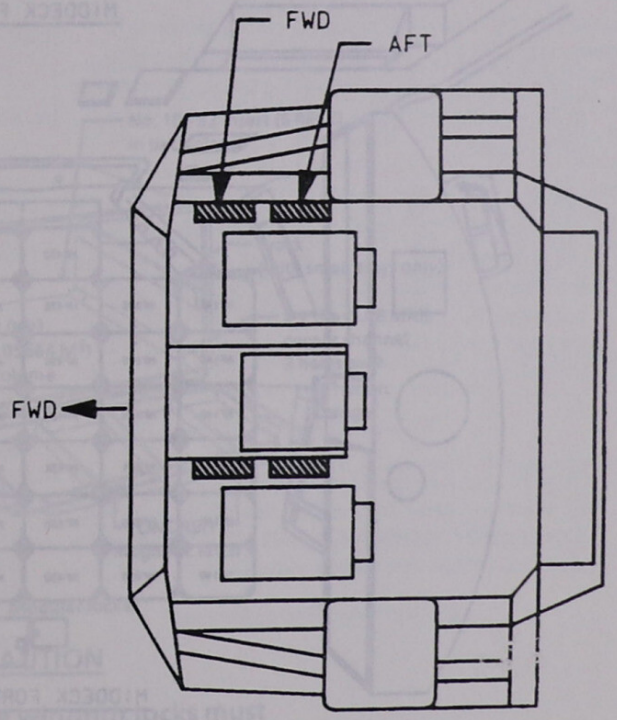

Flight Deck FDF Containers

(▨ = Containers)

There are four sizes of trays: a single tray (two of which fit inside a locker), a double tray, a half-length single tray (four of which fit inside a locker), and a half-length double tray. Approximately 150 cubic feet of stowage space is available, almost 95 percent of it on the middeck.

The lockers are made of either epoxy- or polyimide-coated Kevlar honeycomb material joined at the corners with aluminum channels. Inside dimensions are approximately 11 by 18 by 21 inches. The honeycomb material is approximately 0.25 inch thick, and was chosen for its strength and light weight. The lockers contain about 2 cubic feet of space and can hold up to 66 pounds.

Foam inserts are used in the trays to provide a friction fit for zero-g retention. In addition, straps, snaps, and mesh retention nets are used in some trays. Soft containers are used in orbiter spaces too small for the fixed lockers.

The trays are packed with gear so that no item covers another type of gear. This method of packing reduces confusion usually associated with finding loose equipment and maintaining a record of the equipment.

In the aft flight deck, stowage lockers are located below the rear payload control panels in the center of the deck. A trash container is nominally mounted on the port side of the flight deck, near the interdeck access opening. A temporary stowage bag is nominally located on the starboard side in approximately the same location. These side containers are interchangeable.

In the middeck, container modules can be attached to the forward avionics bay. Provisions for 33 containers are available in this area. In addition, there is an area to the starboard side of the airlock module where nine containers can be attached.

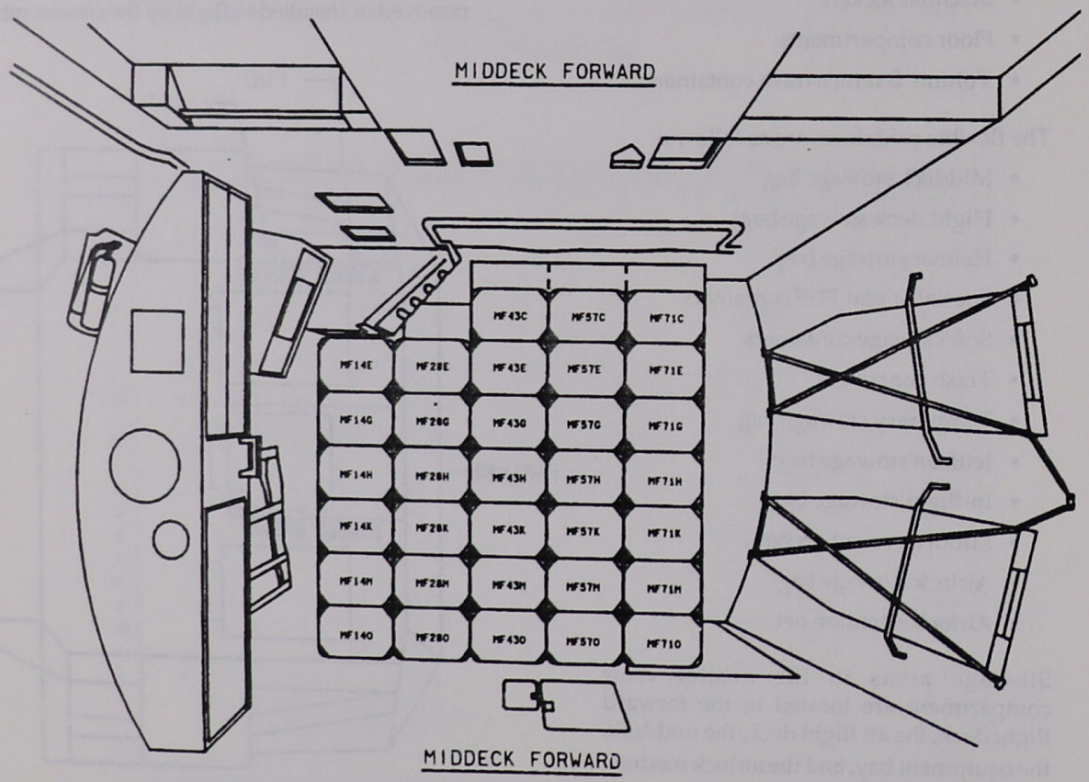

Middeck Forward Modular Lockers and Floor Compartment

To obtain access to the locker interior, the crewmember needs to rotate two quarter-turn, self-aligning ball latches inboard to release the locker door. For on-orbit operations, the door is held closed by double magnetic latches.

The crewmember can open the door a full 180 degrees. By using the standard hole pattern of the locker, straps and brackets can be attached to the locker faces via pip pins for restraining equipment.

In addition, a crewmember can remove lockers in flight in order to gain access to the floor compartments or the avionics bays.

In the event the locker door cannot be closed or latched due to misalignment problems, the crewmembers can remove the locker and use turnbuckles to provide structural support.

Floor Compartments

Six floor compartments are available. Volume F (MD76M), the wet trash compartment, provides 8 ft^3 of stowage under the middeck floor. The CO_2 absorbers are manifested at MD52M, with the in-use position at MD54G. Two other compartments (volumes G (MD80R) and H (MD23R)) are used to store contingency hygiene equipment and EVA accessories respectively. The remaining floor compartment, volume E (MD76C), is used primarily to store official flight kits and personal preference kits.

Wet Trash Compartment

To deposit any trash or waste materials into the wet trash compartment, the crewmember merely lifts the latch handle and opens the circular door,

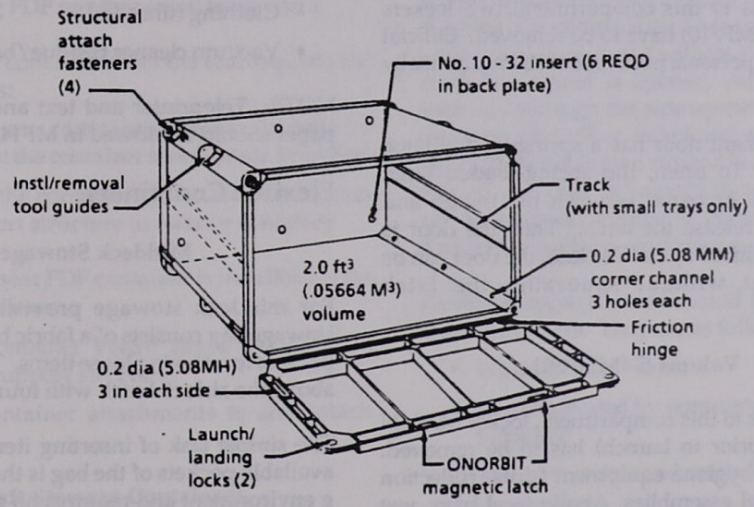

Modular locker

CAUTION

Two captive wingnut locks must be secured for entry/landing.

Schematic of Modular Lockers

deposits the material through a rubber grommet into the trash bag, and closes the door. Wet trash is vented overboard at the rate of approximately 3 lb/day.

NOTE

The WCS vacuum vent valve must be opened to allow the waste gases to be vented overboard.

The types of wet trash to be stowed in the compartment are:

- Polaroid film packs
- Medical kit items
- Emesis bags
- Urine collection devices
- Fecal bags
- WCS odor/bacteria filter
- Excessive leftover food items, such as fresh food, that can cause odors.

Volume E (MD76C)

To gain access to this compartment, two lockers (MF71M and MF710) have to be removed. Official flight kits and personal perference kits are nominally stowed here.

The compartment door has a spring-loaded latch mechanism. To open, the spring-loaded latch mechanism is squeezed between the thumb and forefinger to release the latch. Then the door is subsequently lifted open. To close, the door can be pushed shut without squeezing the latch mechanism.

Volume G (MD80R)

To gain access to this compartment, locker MA16N (if installed prior to launch) has to be removed. Contingency hygiene equipment (urine collection devices, urinal assemblies, Apollo fecal bags, wet wipes, etc.) is stowed here. The compartment door has the same type of spring-loaded latch mechanism used in volume E.

Volume H (MD23R)

This floor compartment has the same type of spring-loaded latch mechanism as used in volumes E and G. EVA accessories (liquid-cooled ventilation garments, EMU batteries and lights, tools, etc.) are manifested in this compartment.

Volume B Return Trash Containers

The containers consist of two rigid compartments providing stowage of approximately 7 ft^3 of dry trash. The compartments are located on the starboard side of the middeck.

To deposit any dry trash into the upper/lower compartment, the crewmember simply inserts the dry trash material through a spring-loaded door.

The types of dry trash that can be stowed in either compartment are:

- Dry towels and washcloths
- Clothing (unsoiled)
- Vacuum cleaner residue/bag.

NOTE: Teleprinter and text and graphics system paper should be stowed in MF14E.

Flexible Containers

Middeck Stowage Bag

For middeck stowage provisions, the middeck stowage bag consists of a fabric bag with 10 built-in pockets for stowing loose items. The bag is attached above the airlock hatch with four hooks.

The simple task of inserting items into one of the available pockets of the bag is the same as in a one-g environment and requires no special instruction. No wet trash is to be stowed in these bags.

Flight Deck Stowage Bag

For flight deck stowage, a flight deck stowage bag is mounted on the back of the CDR and PLT seats. Each bag has built-in pockets for stowing loose items on orbit. An elastic band at the top of each pocket allows access to the interior portion of the pocket.

Helmet Stowage Bag

A polybenzine imidazole-mesh bag with a draw string is provided for stowing unnecessary FDF material or other onboard loose equipment on orbit. The bag is located in the CDR's FDF stowage container. In addition, one helmet stowage bag is manifested for each crewmember and is utilized for stowing the launch/entry suit helmet on orbit.

The task of inserting desired FDF items into the mesh bag consists of simply opening the bag, placing items in the bag, and drawing the string tight to close.

Specialist Seat FDF Containers

A soft fabric container is available for each specialist seat for storing FDF or other small loose items.

To remove the container from the seat requires the following steps:

- Pull up on container release handle to disengage the container attachments from seat.
- Unwrap the container Velcro straps from seat leg support structure to remove container.

The specialist seat FDF container is installed on the right side as follows:

- Attach container Velcro straps around right side leg support structure.
- Insert container attachments to seat attach point.

Soft Stowage Containers

Two types of soft fabric stowage containers are available: single and double. Both containers are restrained by straps and have zippers for access to the internal area of the container.

To gain access to the stowed items in a single or double soft stowage container, the crewmember simply unhooks the container restraining straps and opens the zippers. Stowing of dry, non-odor-producing loose items should be limited to these containers to minimize crew compartment environment contamination.

NOTE

Soft stowage containers normally are not flown unless required.

Trash Containers

Three trash containers are flown. Two containers are mounted in the middeck area, one on the inside surface of the waste management compartment door, and one below the text and graphics system compartment door. The third container is located on the port flight deck. Each container contains a disposable trash bag plastic liner, with spares located in the bottom of the container (outside the installed liner).

The crewmember deposits trash into the container disposable plastic liner through the alligator clamp opening. Once the plastic liner is full, the top of the trash bag liner is closed with its Velcro closure. The trash bag zipper is opened, and the full liner is removed through the side opening. The top of the liner can be further rolled and secured with gray tape. The liner is then stowed in a jettison stowage bag. A new liner is inserted through the trash bag top opening and secured by the Velcro strips on the liner to the trash bag mating surfaces.

Particular types of trash should be stowed only in these containers. They are as follows:

- Waste food/containers
- Wet wipes used for nonwaste collection system purposes
- Wet/dry towels and washcloths
- Clothing
- Vacuum cleaner residue/bag.

NOTE

Absolutely *no* human waste materials (fecal, urine, or emesis) are to be stowed in these trash bags/liners. Any teleprinter or text and graphics system paper should be stowed in MF14E.

Temporary Stowage Bag

One temporary stowage bag is flown on the starboard flight deck, and a spare is stowed in a middeck locker. The bag is used to hold loose equipment for temporary restraining, stowage, or transporting on orbit.

The temporary stowage bag can be snapped or attached with Velcro to the crew station. The bag has an inside pocket to hold small items.

Loose equipment is inserted into the bag through the alligator clamp opening. Small items are stowed in the bag inside pocket.

NOTE

No wet/odor-producing waste materials are to be stowed in the available bag.

Jettison Stowage Bags

Teflon-coated Nomex cloth bags are provided to stow waste/trash materials on orbit. Each bag has a drawstring for sealing the opening of the bag.

At least one of these bags is used as a return-to-Houston bag. It contains items (such as videocassettes, audio cassettes, film, and notes) that must be flown to Houston immediately following a mission.

In-Flight Stowage Bags

Polybenzine imidazole brown-colored mesh bags of the same approximate dimensions as the jettison stowage bags are stowed in a middeck stowage locker. The bags are used for stowing the crewmembers' launch equipment such as launch/entry suits, boots, and parachute packs. Each bag has a drawstring for sealing the opening of the bag.

Middeck Retention Net

The middeck retention net, a polybenzine imidazole brown-colored mesh net with caribiners, is manifested on nonsleepstation flights. This net is used to restrain items such as seats, launch/entry suits, boots, and helmets on orbit. It is located on the starboard forward middeck and attaches to the MF71 row of lockers and the starboard wall.

Airlock Stowage Bag

The airlock stowage bag, when manifested, is mounted to the third EMU adapter plate. This bag is made of white Nomex material and provides an alternate stowage location primarily for crewmembers' clothing.

Airlock Retention Net

The airlock retention net, when manifested, is utilized to restrain equipment in the airlock. It is a brown polybenzine imidazole mesh net that resembles two triangles joined at their apexes.

2.23 WASTE MANAGEMENT SYSTEM (WMS)

CONTENTS

Description 2.23-1
Operations 2.23-5

Description

The waste management system is an integrated, multifunctional system used primarily to collect and process crew biological wastes. The WMS is located in the middeck of the orbiter crew compartment in a 29-inch-wide area immediately aft of the crew ingress and egress side hatch.

The system collects, stores, and dries fecal wastes and associated paper tissues. It processes urine and transfers it to the waste water tank and processes EMU condensate water from the airlock and transfers it to the waste water tank if an EVA is required on a mission. The system also provides an interface for venting trash container gases overboard and dumping atmospheric revitalization waste water overboard in a contingency situation, and it transfers atmospheric revitalization system waste water to the waste water tank.

A waste management compartment door and two privacy curtains attached to the inside of the door provide privacy. One curtain is attached to the top of the door and interfaces with the edge of the interdeck access, and the other is attached to the door and interfaces with the galley, if installed. The door also serves as an ingress platform during prelaunch (vertical) operations since the flight crew must enter the flight deck over the waste management compartment. The door has a friction hinge and must be open to gain access to the waste management compartment.

The WMS consists of a commode, urinal, fan separators, odor and bacteria filter, vacuum vent quick disconnect, and controls. The commode is 27 by 27 by 29 inches, and it is used like a standard toilet. The commode contains a single multilayer

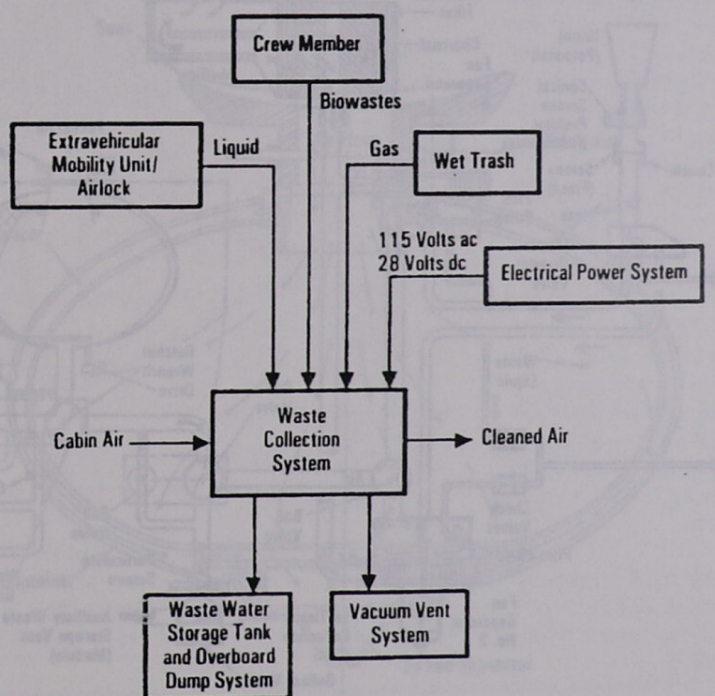

Waste Management System

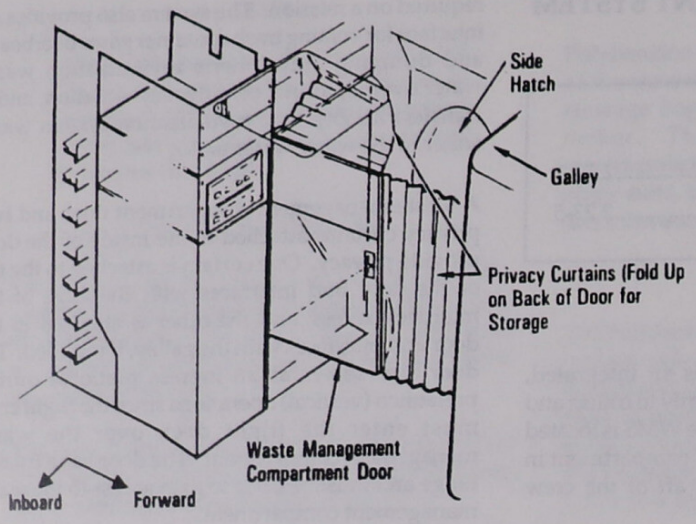

Waste Management System Privacy Curtains

hydrophobic porous bag liner for collecting and storing solid waste. When the commode is in use, it is pressurized, and transport air flow is provided by the fan separator. When the commode is not in use, it is depressurized for solid waste drying and deactivation.

The urinal is essentially a funnel attached to a hose and provides the capability to collect and transport liquid waste to the waste water tank. The fan separator provides transport air flow for the liquid. The fan separators separate the waste liquid from the air flow. The liquid is drawn off to the waste water tank, and the air returns to the crew cabin through the odor and bacteria filter. The filter removes odors and bacteria from the air that returns to the cabin. The

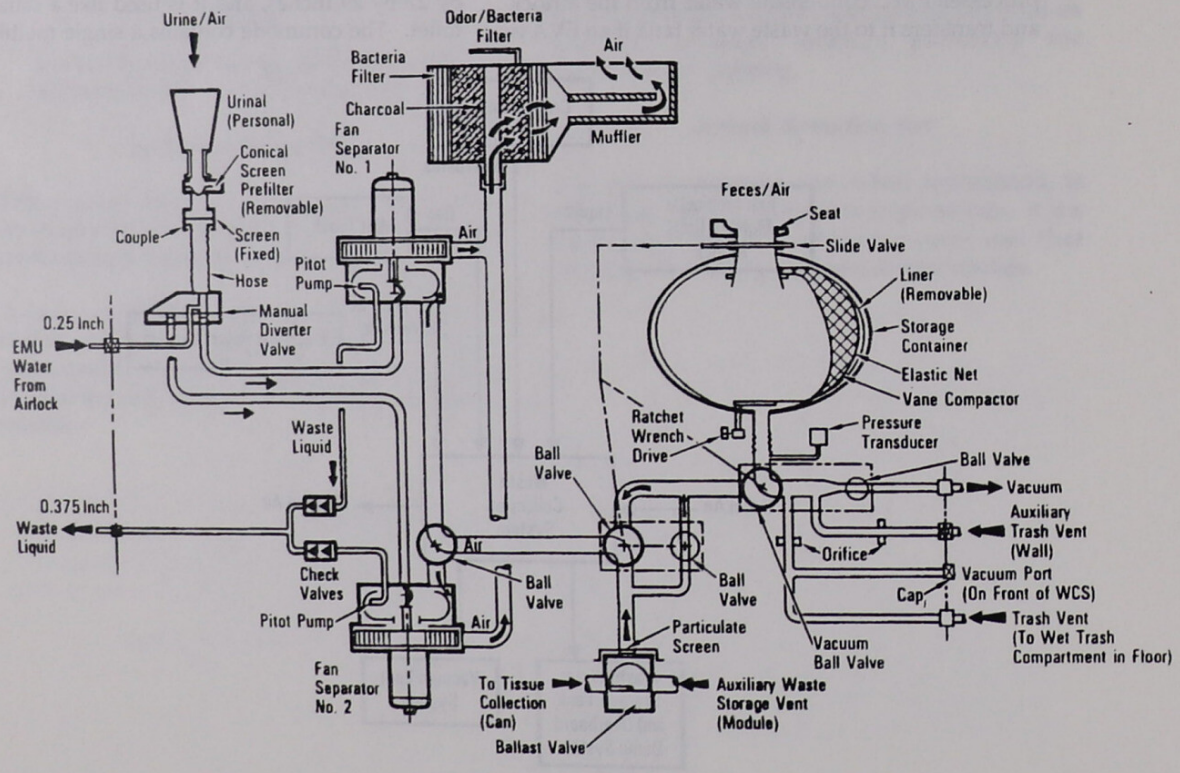

Waste Management System

vacuum quick disconnect is used to vent liquid directly overboard from equipment connected to the quick disconnect through the vacuum line.

The urinal assembly is a flexible hose with attachable funnels that can accommodate both men and women. The assembly can be used in a standing position, or it can be attached to the commode by a pivoting mounting bracket for use in a sitting position.

All waste management system gases are ducted from the fan separator into the odor and bacteria filter and then mixed with cabin air. The filter can be removed for in-flight replacement.

Various restraints and adjustments enable the crew to achieve the proper body positioning to urinate or defecate in a zero-gravity environment. Two foot restraints are provided. A toe bar is located at the commode base and is used for standing urination. It consists of two flexible cylindrical pads on a shaft that can be adjusted to various heights by releasing two

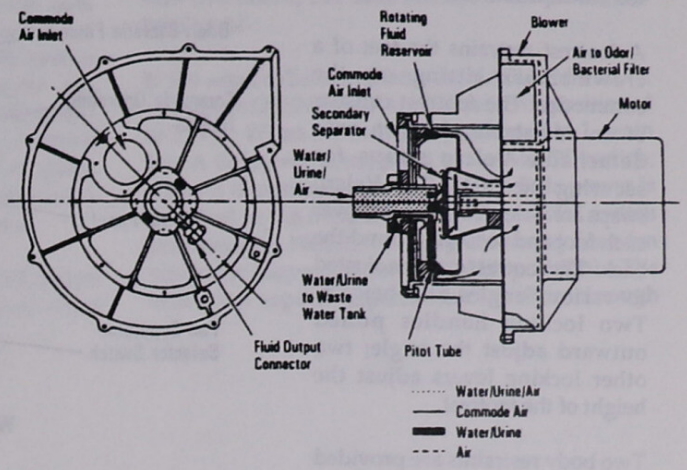

Waste Management System Fan Separator

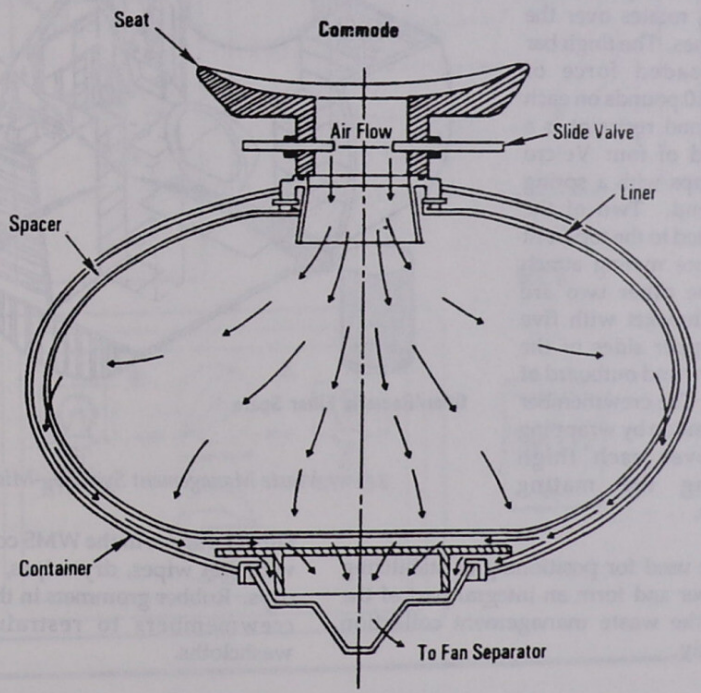

Waste Management System Container Liner

locking levers that are turned 90 degrees counterclockwise. The crewmember is restrained by slipping his or her feet under the toe bar restraint.

A footrest restrains the feet of a crewmember sitting on the commode. The footrest consists of an adjustable platform with detachable Velcro straps for securing the feet. The Velcro straps are wrapped crosswise over each foot and secured around the back. The footrest can be adjusted to various angles and heights. Two locking handles pulled outward adjust the angle; two other locking levers adjust the height of the footrest.

Two body restraints are provided for use when crewmembers are seated on the commode. The primary restraint is a thigh bar that the crewmember lifts up out of the detent position, rotates over the thigh, and releases. The thigh bar exerts a preloaded force of approximately 10 pounds on each thigh. The second restraint is a backup method of four Velcro fabric thigh straps with a spring hook on one end. Two of the straps are attached to the top front commode surface mating attach points, and the other two are installed on a bracket with five holes on the upper sides of the commode, below and outboard of the thigh bars. The crewmember is secured in position by wrapping two straps over each thigh and attaching the mating Velcro surfaces.

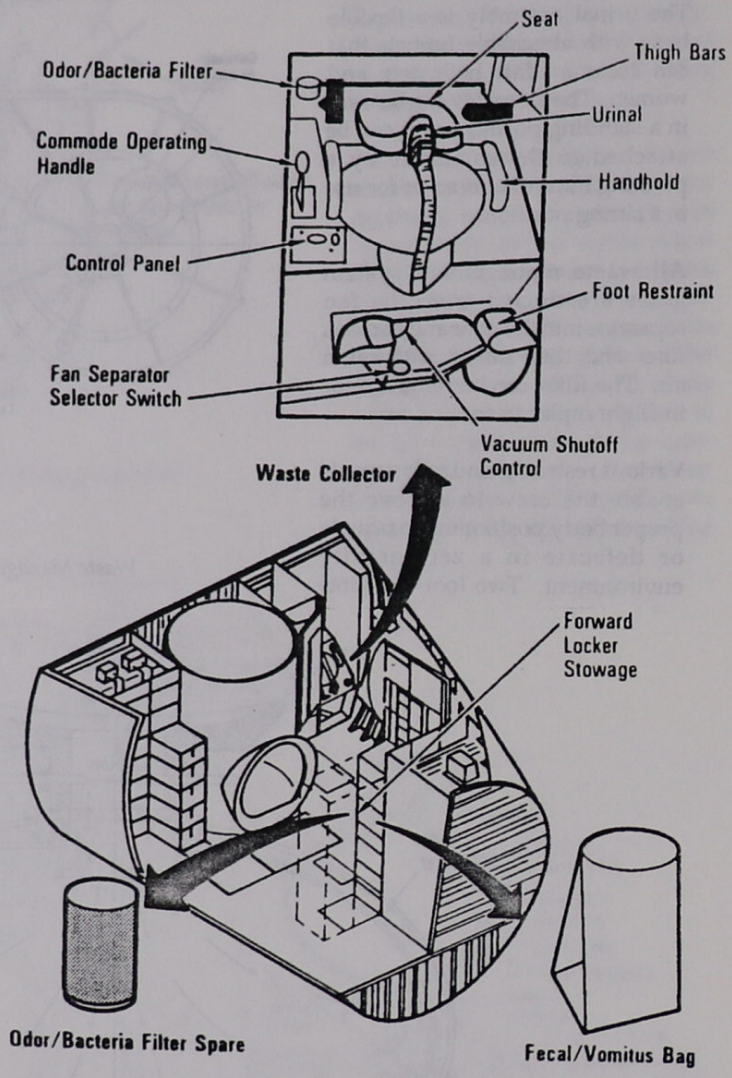

Waste Management System—Middeck

Handholds are used for positioning or stabilizing the crewmember and form an integral part of the top cover of the waste management collection system assembly.

Stowage space in the WMS compartment is stocked with wet wipes, dry wipes, tissues, and wash 'n' drys. Rubber grommets in the compartment allow crewmembers to restrain their towels and washcloths.

Operations

The controls on the waste management system are the *VACUUM VALVE*, *FAN SEP* select switch, *MODE* switch, fan separator bypass switches, and *COMMODE CONTROL* handle. The system uses dc power to control the fan separators and ac power for fan separator operations. The *MODE* switch and the *COMMODE CONTROL* handle are mechanically interlocked to prevent undesirable system configurations. The remaining controls operate independently. The fan separator bypass switches allow the crewmember to manually override a fan separator limit switch failure.

For launch and entry, the *VACUUM VALVE* switch is set to *CLOSE*. During on-orbit operations when the WMS is not in use, the vacuum valve is set to *OPEN*. This exposes the commode (overboard) via the vacuum vent system, and any solid wastes in the commode are dried. The hydrophobic bag liner in the commode allows gas from the commode to vent overboard, but does not allow the passage of free liquid.

In the urine collection mode, the *VACUUM VALVE* remains in *OPEN*. The *FAN SEP* switch is positioned to *1* or 2. When the switch is positioned to *1*, main bus A dc power is supplied to the *MODE* switch; when it is positioned to 2, main bus B dc power is supplied to the *MODE* switch. The *MODE* switch positioned to *WCS/EMU* energizes a relay for a fan separator (dependent on *FAN SEP* position). The active fan separator pulls cabin air flow through

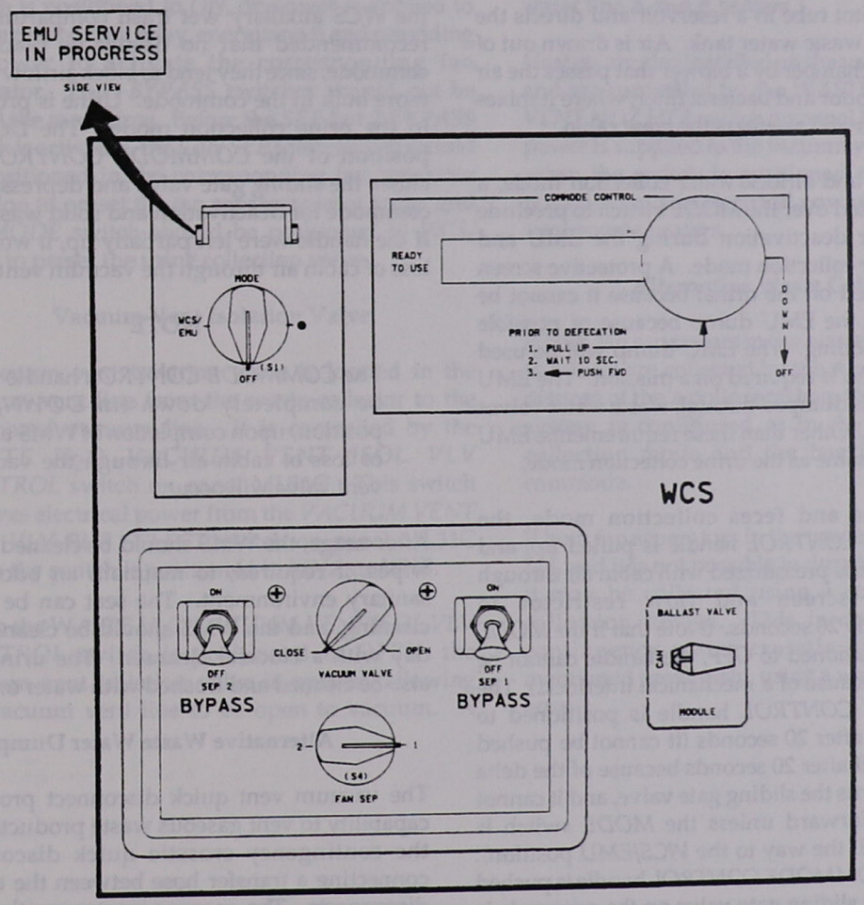

Waste Management System Controls

the urinal at 8 cubic feet per minute and ballast cabin air through the wet-trash storage modules at 30 cubic feet per minute.

The ballast air mixes with the urine transport air flow in the fan separator. The fan separator is designed to operate at 38 cubic feet per minute and thus requires the 30 cubic feet per minute ballast air flow. Liquid check valves at the waste water outlet from each fan separator provide a back pressure for proper separator operation and prevent backflow through the non-operating separator.

The liquid and air mixture from the urinal line enters the fan separator axially and is carried to a rotating chamber. The mixture first contacts a rotating impact separator that throws the liquid to the outer walls of the rotating fluid reservoir. Centrifugal force separates the liquid and draws it into a stationary pitot tube in a reservoir and directs the liquid to the waste water tank. Air is drawn out of the rotating chamber by a blower that passes the air through the odor and bacteria filter, where it mixes with cabin air and re-enters the crew cabin.

In the EMU and airlock water collection mode, a guard is rotated over the *MODE* switch to preclude WMS use or deactivation during the EMU and airlock water collection mode. A protective screen cap is installed on the urinal because it cannot be used during the EMU dump because of possible separator flooding. The EMU dump will be used only if an EVA is required on a mission. The EMU waste water is dumped through waste water valves in the airlock. Other than these requirements, EMU dump is the same as the urine collection mode.

In the urine and feces collection mode, the *COMMODE CONTROL* handle is pulled up, and the commode is pressurized with cabin air through the debris screen and flow restrictor in approximately 20 seconds. (Note that if the *MODE* switch is positioned to *OFF*, the handle cannot be pulled up because of a mechanical interlock.) The *COMMODE CONTROL* handle is positioned to *PUSH FWD* after 20 seconds (it cannot be pushed forward until after 20 seconds because of the delta pressure across the sliding gate valve, and it cannot be pushed forward unless the *MODE* switch is positioned all the way to the *WCS/EMU* position). When the *COMMODE CONTROL* handle is pushed forward, the sliding gate valve on the commode is opened. The commode outlet control valve and ballast air control valves are positioned to connect the commode to the fan separator, and the commode pressurization valve is closed.

The WMS is used like a normal toilet. The commode seat is made of a contoured, compliant, semisoft material that provides proper positioning and is sealed to minimize air leakage. Feces enter the commode through the 4-inch-diameter seat opening and are drawn in by cabin air flowing through holes under the seat at 30 cubic feet per minute. Fecal matter and tissues are deposited on the porous bag liner, and the air is drawn through the hydrophobic material to the fan separator. The hydrophobic liner material prevents free liquid and bacteria from leaving the collector. One or two tissues (only) could be placed in the commode. All others are deposited in a WCS canister bag and then placed in the WCS auxiliary wet trash compartment. It is recommended that no tissues be placed in the commode, since they tend to block airflow and cause more bulk in the commode. Urine is processed as in the urine collection mode. The *DOWN/OFF* position of the *COMMODE CONTROL* handle closes the sliding gate valve and depressurizes the commode for deactivation and solid waste drying. If the handle were left partially up, it would cause loss of cabin air through the vacuum vent.

NOTE

The *COMMODE CONTROL* handle must be completely down (in *DOWN/OFF* position) upon completion of WMS usage, or loss of cabin air through the vacuum vent valve will occur.

After usage, the WMS should be cleaned with wet wipes, if required, to maintain an odorless and sanitary environment. The seat can be lifted for cleaning, and the WMS should be cleaned once a day with a biocidal cleanser. The urinal should also be cleaned and flushed with water once a day.

Alternative Waste Water Dump

The vacuum vent quick disconnect provides the capability to vent gaseous waste products through the contingency crosstie quick disconnect by connecting a transfer hose between the two quick disconnects. The gaseous wastes are then vented

overboard through the waste water dump line. This is particularly important if a blockage occurs in the vacuum vent line, which would prevent the WMS from being used (it could not vent the commode overboard to dry the waste products).

Alternate Fan Separator Operations

If fan separator 1 is inoperative or fails to achieve proper operational speed (which can be verified by a reduced noise level or lack of air flow), the *FAN SEP* switch is positioned from *1* to *2*, and fan separator 2 will operate in the same manner as 1.

The lever-locked *FAN SEP 1 BYPASS* and *FAN SEP 2 BYPASS* switches permit the crew to manually override a fan separator limit switch failure in either the *FAN SEP* or *MODE* switches. When either switch is positioned to *ON*, dc power is applied to the corresponding relay, energizing it and providing ac power to activate the corresponding fan separator. Both *BYPASS* switches should not be *ON* at the same time. Before the *SEP 1* or *2 BYPASS* switch is activated, the *FAN SEP* select switch should be positioned in the corresponding fan separator position to preset the fan separator inlet valve, and the *MODE* switch should be positioned to *WCS/ EMU* to preset the urine collection valve.

Vacuum Vent Isolation Valve

A vacuum vent isolation valve is located in the vacuum vent line from the waste collector to the overboard vacuum line. It is controlled by the *WASTE H_2O VACUUM VENT ISOL VLV CONTROL* switch on panel ML31C. This switch receives electrical power from the *VACUUM VENT ISOL VLV BUS SELECT* switch on panel ML31C when the switch is positioned to *MNA* or *MNB*.

When the *WASTE H_2O VACUUM VENT ISOL VLV CONTROL* switch is positioned to *OPEN*, the vacuum vent isolation valve is opened, allowing the vacuum vent line to be open to vacuum. A talkback indicator above to the switch indicates *OP* when the valve is open, barberpole when the valve is in transit, and *CL* when the valve is closed. The *OFF* position closes the valve.

Even if the vacuum vent isolation valve could not be opened, vacuum vent functions would not be lost. A small hole in the valve plate allows proper venting overboard in such a contingency.

Heaters

Thermostatically controlled heaters are installed on the vacuum vent line. Electrical power for the A and B heaters is supplied on the *H_2O LINE HTR A* and *B* circuit breakers on panel ML86B. (These circuit breakers also supply electrical power to supply water dump line A and B heaters and waste water line A and B heaters.)

Heaters are also installed on the vacuum vent nozzle and are controlled by the *WASTE H_2O VACUUM VENT NOZ HTR* switch on panel ML31C. Electrical power is supplied to the vacuum vent nozzle heaters when the switch is positioned to *ON*. The *OFF* position removes electrical power from the vacuum vent nozzle heaters.

Alternative Waste Collection

If both fan separators in the waste collection system fail, feces are collected by the Apollo fecal bag. To dispose of the Apollo fecal bag, the waste collection system is configured as in the urine and feces collection mode and the bag is stowed in the commode.

If both fan separators in the waste collection system fail, and it is not possible to dump urine overboard, it may be collected using a contingency urine collection device. This is done through the contingency water crosstie quick disconnect mentioned previously, using a waste water transfer hose.

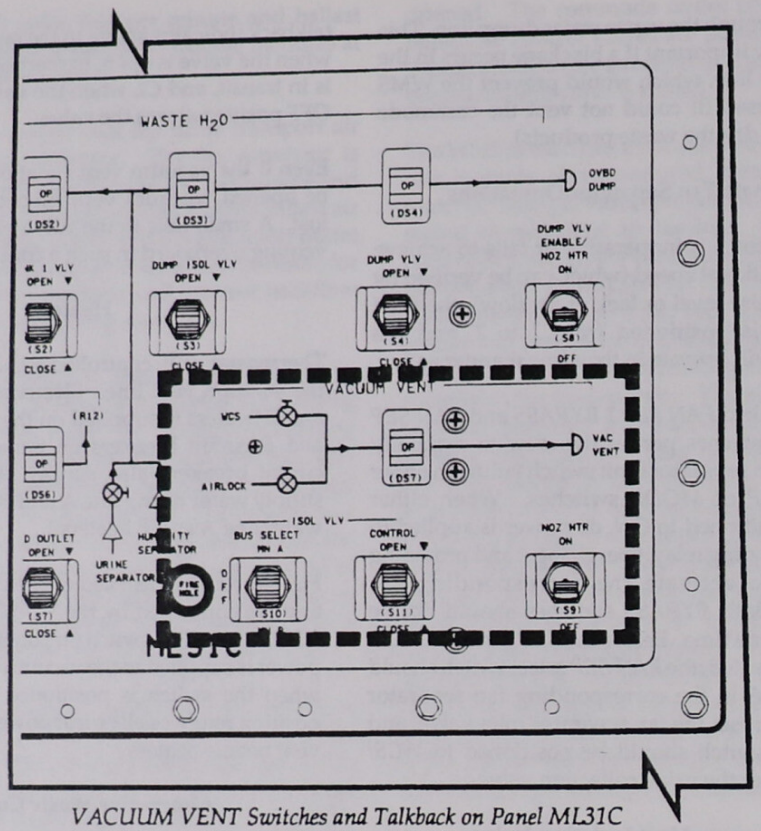

VACUUM VENT Switches and Talkback on Panel ML31C

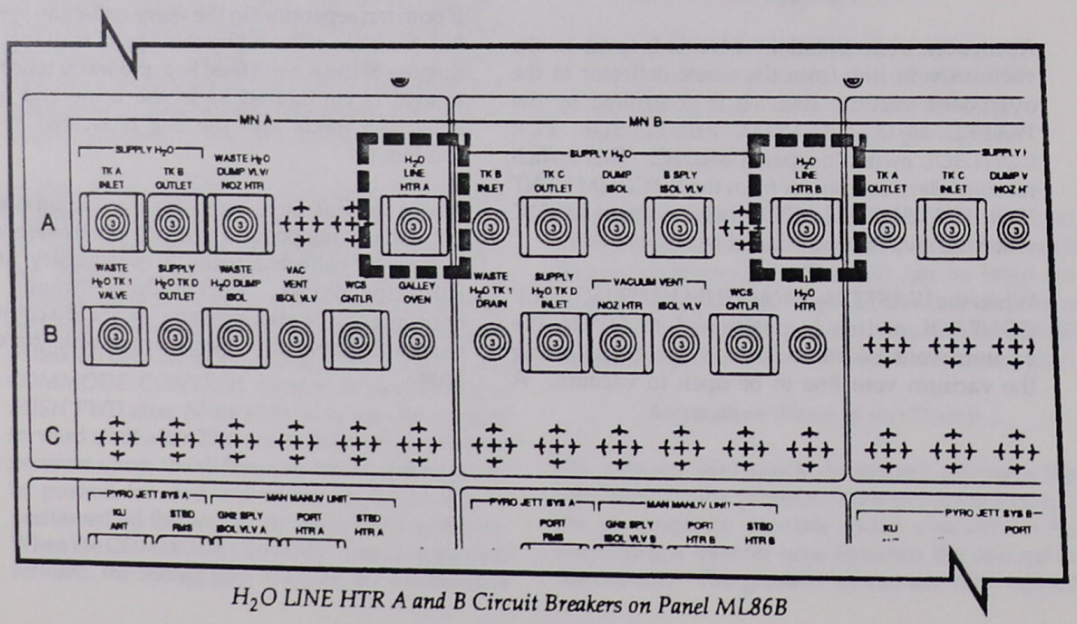

H_2O LINE HTR A and B Circuit Breakers on Panel ML86B

3. FLIGHT DATA FILE

Contents

3.1 Control Documents 3.1-1
3.2 Support Documents 3.2-1
3.3 Off-Nominal Documents 3.3-1
3.4 Reference Documents 3.4-1
3.5 Operational Use 3.5-1

The Flight Data File (FDF) is the total onboard complement of documentation and related crew aids available to the crew for flight execution. The FDF consists of procedural checklists, timelines, schematics, charts, cue cards, portable onboard computer software, teleprinter/graphics messages, and accessories. The FDF also includes office-type supplies, such as pens, pencils, markers, Velcro, and rubber bands. The FDF used in training is essentially identical to the material used on orbit except where trainer-unique characteristics require differences.

The Crew Procedures Control Board (CPCB) is the governing body for establishment of guidelines and policies pertaining to the development, publication, fabrication, and validation of FDF under the authority of the Director of Mission Operations. The management process, policies, and guidelines under which the FDF is developed are contained in the Crew Procedures Management Plan (CPMP), JSC-08969. This plan and its Appendices A-K detail the development of crew procedures and activities as well as the fabrication and processing of the FDF material. Crew Procedures and activities are documented in a variety of books and checklists. Time-critical or frequently used procedures are documented on cue cards and in flip books (a series of cue cards that are ringed together). These documents are categorized into four groups:

- **Control documents** — the FDF books that provide the schedule of crew activities for an entire flight. There is one controlling document for every phase of a flight (i.e., Ascent, Post Insertion, Orbit, Deorbit, and Entry). These documents are time oriented and refer to other FDF documents as required.

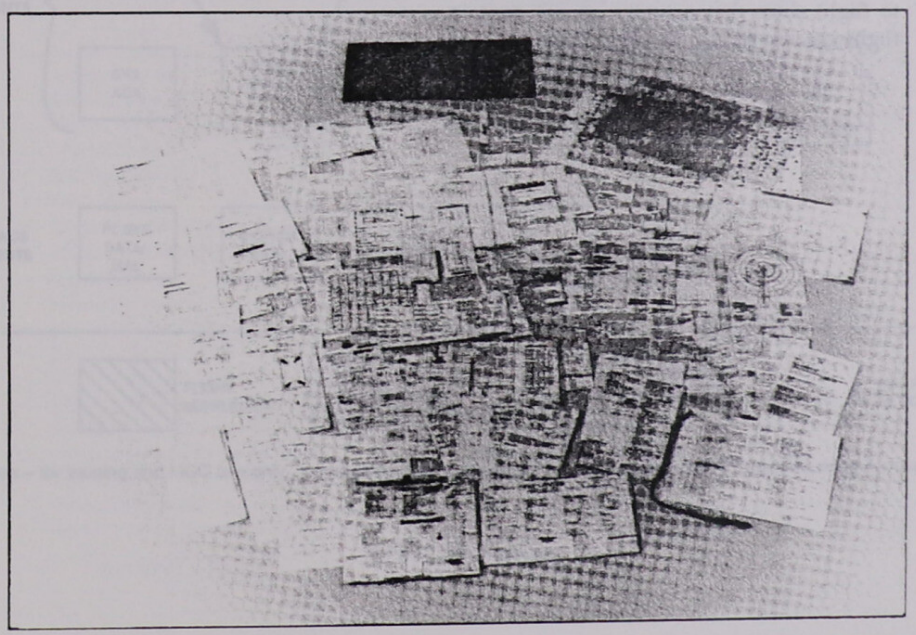

FDF Products

- **Support documents** — used on orbit to accomplish various objectives scheduled in the Control documents, such as flight-specific payload procedures, EVA, or rendezvous and proximity operations. The CPCB may occasionally designate a Support book as the controlling document for that specific phase of the flight.

- **Off-Nominal documents** — contain contingency procedures for all phases of flight.

- **Reference documents** — provide data not normally required for a particular task, but useful to the crew. Documents include CRT displays, caution and warning (C/W) parameters, landing site charts, and stowage locations for crew use items.

When a Spacelab module or pallet is flown, separate Control, Support, Off-Nominal, and Reference documents for Spacelab are flown.

Each FDF book within the four main groups can also be categorized into one of three subgroups:

- **Generic documents** — reflown from flight to flight since they usually do not contain flight-specific data. Temporary pages may occasionally be added to Generic documents to account for vehicle or mission-specific data.

- **Flight-Specific documents** — contain flight-specific data used in conjunction with Generic publications. Flight-Specific documents contain data for a single mission and have no generic companion document.

- **Standby Supplements** — contain procedures that are not flown because they have a very low probability of being needed. The data are available on console in Mission Control and can be uplinked if required.

Certain pages of Control, Support, and Off-Nominal documents are labeled "Not Flown." These pages are included in the books sent to the various recipients on the distribution list, including Mission Control, but are not included in the "flight quality" copies used in the trainers or in flight. Cue cards are also included in the body of the distribution copies but are not flown as part of a book or checklist; exceptions are ascent and entry cue cards and flip book pages that are provided to mission specialist 2.

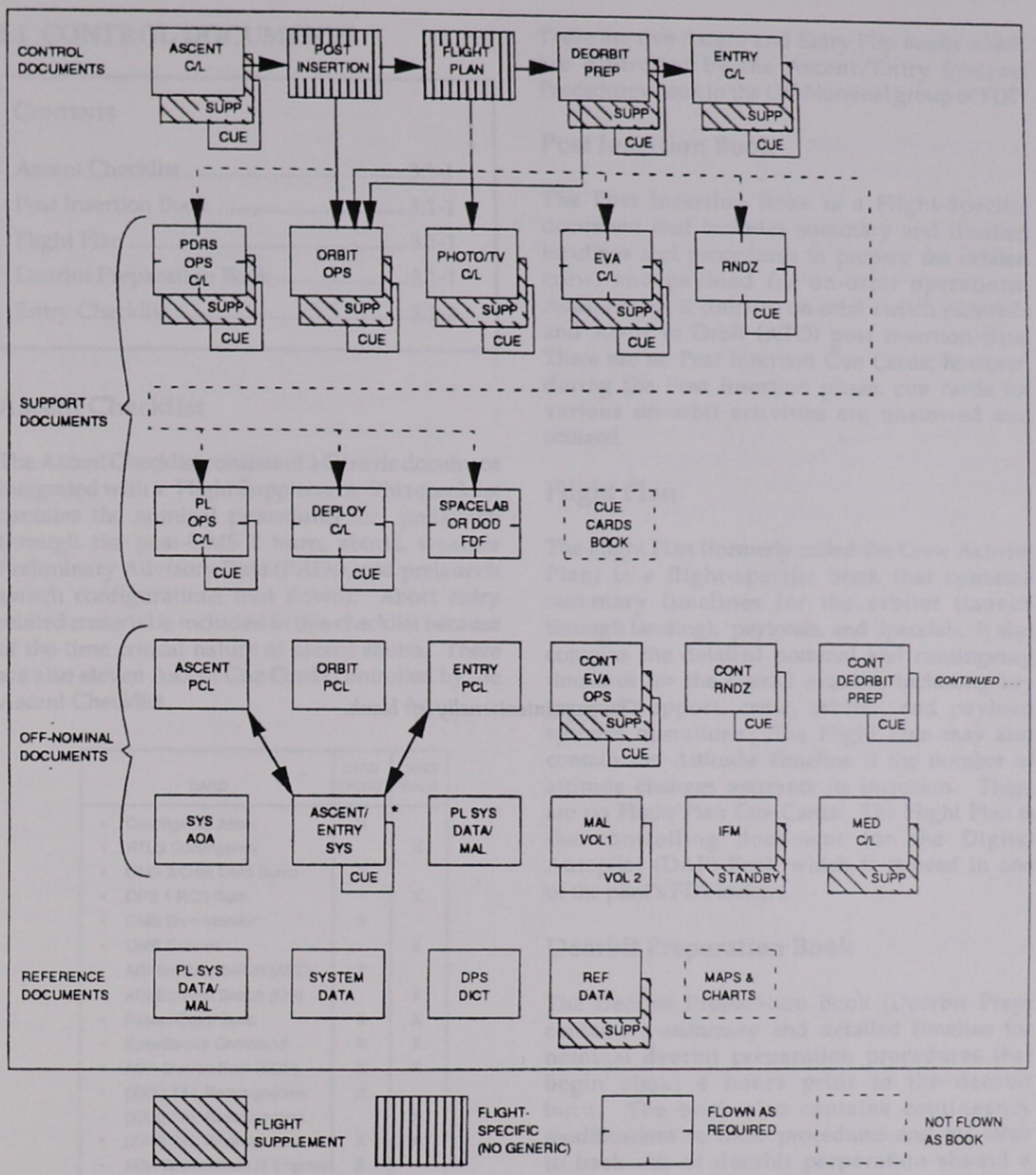

*Not flown – for training and MCC use only. Appropriate pages are placed in the front of the MS Pocket Checklists for use in-flight.

STS FDF Structure

3.1 CONTROL DOCUMENTS

CONTENTS

Ascent Checklist 3.1-1
Post Insertion Book 3.1-1
Flight Plan 3.1-1
Deorbit Preparation Book 3.1-1
Entry Checklist 3.1-2

Ascent Checklist

The Ascent Checklist consists of a Generic document integrated with a Flight Supplement. This checklist contains the nominal procedures for prelaunch through the post-OMS 2 burn, aborts, weather Preliminary Advisory Data (PADs), and prelaunch switch configurations (not flown). Abort entry related material is included in this checklist because of the time critical nature of ascent aborts. There are also eleven Ascent Cue Cards controlled by the Ascent Checklist.

CARD	CARD FRONT	CARD BACK
• Contingency Abort	X	
• RTLS Contingency		X
• OMS 2/Orbit OMS Burns	X	
• OPS 1 RCS Burn		X
• OMS Burn Monitor	X	
• OMS Failures		X
• ADI Err/Rate Switch (ASC)	X	
• ADI Err/Rate Switch (Ent)		X
• Ascent/Entry Spec	X	X
• Speedbrake Command	X	X
• AOA Deorbit Burn (RCS)	X	X
• (XXX) TAL Redesignation	X	
• (XXX) TAL Redesignation		X
• (XXX) TAL Redesignation	X	X
• AOA Deorbit Burn (2 Engine)	X	
• AOA Deorbit Burn (1 Engine)		X
• Entry Alpha	X	
• Ascent ADI-Nominal		X

Ascent Cue Cards

There are five Ascent and Entry Flip Books which are controlled by the Ascent/Entry Systems Procedures Book in the Off-Nominal group of FDF.

Post Insertion Book

The Post Insertion Book is a Flight-Specific document that includes summary and detailed timelines and procedures to prepare the orbiter, crew, and payload for on-orbit operations. Additionally, it contains on-orbit switch pictorials and Abort to Orbit (ATO) post insertion data. There are no Post Insertion Cue Cards; however, during the Post Insertion phase, cue cards for various on-orbit activities are unstowed and utilized.

Flight Plan

The Flight Plan (formerly called the Crew Activity Plan) is a flight-specific book that contains summary timelines for the orbiter (launch through landing), payloads, and Spacelab. It also contains the detailed nominal and contingency timelines for the overall mission, including key ground support, crew, orbiter, and payload systems operations. The Flight Plan may also contain the Attitude Timeline if the number of attitude changes warrants its inclusion. There are no Flight Plan Cue Cards. The Flight Plan is the controlling document for the Digital Autopilot (DAP) Book which is stowed in one of the pilot's FDF lockers.

Deorbit Preparation Book

The Deorbit Preparation Book (Deorbit Prep) contains a summary and detailed timeline for nominal deorbit preparation procedures that begin about 4 hours prior to the deorbit burn. The book also contains contingency modifications to these procedures and the steps to back out of deorbit preparation should a waveoff be required. Additionally, this book contains a pictorial of the entry switch list, nominal and contingency deorbit preparation procedures for payload bay door closure, and

backup flight system (BFS) deorbit preparation notes. There are no cue cards controlled by the Deorbit Prep book.

Entry Checklist

The Entry Checklist (Generic and Flight Supplement) becomes the controlling document about 43 minutes prior to the deorbit burn. This checklist contains pre-deorbit burn, post-burn, entry, and post-landing procedures. There are 11 Entry Cue Cards associated with the Entry Checklist.

CARD	CARD FRONT	CARD BACK
• Deorbit Burn Flight Rules	X	X
• Deorbit Burn Monitor	X	
• OMS Failures		X
• Deorbit Burn (RCS)	X	X
• Deorbit Burn (2 Engine)	X	
• Deorbit Burn (1 Engine)		X
• Unbalanced Propellant Deorbit Burn	X*	
• Deorbit Burn (Mixed XFeed)		X*
• Entry Maneuvers	X	X
• Entry No/Go	X	X
• Mach Alpha	X	X
• RCS Critical Entry	X	
• Trim/OSC		X
• X c.g. Calculation	X	
• Y c.g. Calculation		X
• STS-XX PTI Monitor	X	X

*Hinged card.

Entry Cue Cards

3.2 SUPPORT DOCUMENTS

CONTENTS

Orbit Operations Checklist 3.2-1
Photo/TV Checklist 3.2-1
Payload Deployment and Retrieval System Operations Checklist 3.2-1
Extravehicular Activity Checklists 3.2-1
Rendezvous Book 3.2-2
Payload Operations Checklist 3.2-2
Deploy Checklist 3.2-2
Additional Support Documents 3.2-2

The Generic documents and Flight Supplements within this group are bound together for training and flight rather than integrated.

Orbit Operations Checklist

The Orbit Operations (Orbit Ops) Checklist contains the procedures for on-orbit operation of orbiter systems, pre-sleep and postsleep periods, detailed test objectives (DTOs), and separation maneuvers. Three cue cards are controlled by the Orbit Ops Checklist, which provide procedures for saving data in the mass memory units (MMUs), a directory of general purpose computer (GPC) specialist function (SPEC) and display (DISP) assignments, and procedures for fuel cell purging.

Photo/TV Checklist

The Photo/TV Checklist contains the procedures for still, motion picture, and closed circuit television (CCTV) camera configuration (including camcorder). It also contains camera setup, activation, and deactivation procedures for photo/TV scenes, camera displays and controls, and camera malfunctions (excluding CCTV cameras). Four Photo/TV Cue Cards detail nominal procedures for the use of the CCTV system, video tape recorder (VTR), and airborne digitizing unit (ADU), and provide data for Earth observation photography and film use. (Examples of cue cards are in Section 2.3.)

Payload Deployment and Retrieval System Operations Checklist

The Payload Deployment and Retrieval System (PDRS) Operations Checklist Generic and Flight Supplement documents fly only on Shuttle missions that have the remote manipulator system (RMS) manifested. These documents contain the RMS and RMS/payload nominal, backup, and contingency procedures. They also contain CCTV data for the RMS television cameras (along with the Photo/TV Checklist) and RMS-related EVA procedures. The PDRS document controls three standard cue cards. Two of these are actually transparent overlays for the CCTV monitors for use in stowing the RMS and for end effector pre-grapple lineup. The other card lists procedures for contingency payload release and capture.

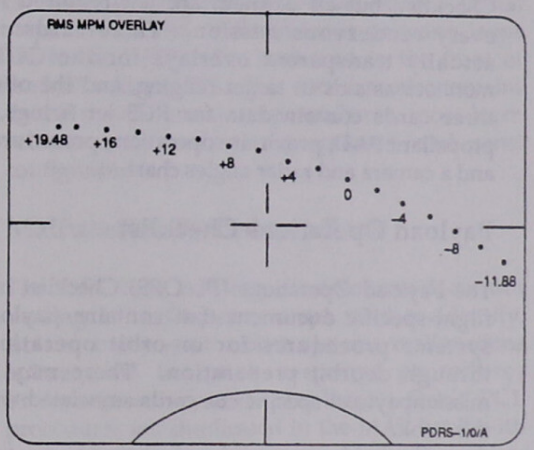

PDRS Cue Card (Transparency)

Extravehicular Activity Checklists

The Extravehicular Activity (EVA) Generic and Flight Supplement Checklists are flown for planned EVAs or for payloads that have EVA backup procedures. These checklists contain all of the procedures for EVA preparation through post-EVA. Also included are extravehicular mobility unit (EMU) maintenance, recharging, and malfunction procedures, plus EMU contingency data and airlock nominal and emergency procedures. Manned maneuvering unit (MMU) procedures reside in the EVA Flight

Supplement for missions manifesting the MMU. Three cue cards are controlled through the EVA Checklist. They contain procedures for orbiter and Spacelab airlock depressurization/repressurization and EMU leak check data. The EVA Checklist also controls the EVA cuff checklist worn on the EMU sleeve.

Rendezvous Book

A Rendezvous (RNDZ) Flight-Specific Book is flown for missions with a planned or high probability rendezvous. This book contains a rendezvous flight profile, flight rules summary, deploy procedures (if applicable), rendezvous timeline, contingency operations, rendezvous burn procedures, and reference data regarding the DAP, relative motion, and targeting. There are six cue cards controlled by the RNDZ Checklist, but all of them are not required for every rendezvous mission. Three cards are actually transparent overlays for the CCTV monitors as aids in target ranging, and the other three cards contain data for RCS jet firings, a propellant PAD, proximity operations procedures, and a camera and radar angles chart.

Payload Operations Checklist

The Payload Operations (PL OPS) Checklist is a flight-specific document that contains payload systems procedures for on-orbit operations through deorbit preparation. There may be missionpayload-specific cue cards associated with this book.

Deploy Checklist

The Deploy Checklist is also a flight-specific book with the payload identified in the title. This document covers all phases of deploy from payload checkout through deploy (including RMS procedures), and orbiter separation activities. The checklist also contains deploy flight rules, backup, contingency, and jettison procedures, forward RCS data, and payload critical action responses. The number and types of Deploy Cue Cards flown are payload-specific.

Additional Support Documents

There may be additional Support documents and associated cue cards flown for DOD missions. The additional DOD books are only required for classified activity. The termination of dedicated classified DOD missions may eliminate the need for these publications. These additional documents cover DOD payload operations and photo/TV activities. The Cue Cards and Procedural Decals Book is published and distributed for ground use. It does not fly on the orbiter. It is the controlling document for decals and cue cards that do not reside in other publications. Additionally, this document promulgates guidelines and constraints for the fabrication of all cue cards and CCTV overlays and provides diagrams for the placement of flight deck cue cards for various mission phases.

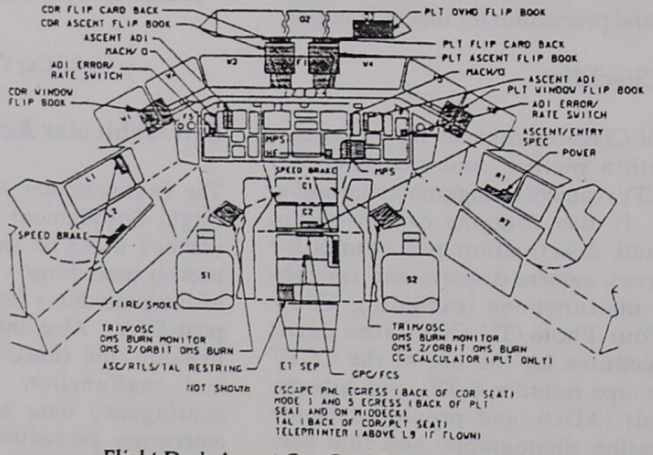

Flight Deck Ascent Cue Card Placement

3.3 OFF-NOMINAL DOCUMENTS

CONTENTS

Pocket Checklists 3.3-1
Ascent/Entry Systems Procedures Book 3.3-1
Systems Abort Once Around Book 3.3-1
Malfunction Procedures Book 3.3-1
In-Flight Maintenance Checklist 3.3-1
Payload Systems Data and Malfunction Procedures Book 3.3-2
Medical Checklist 3.3-2
Contingency EVA Operations Checklist 3.3-2
Contingency Rendezvous Book 3.3-2
Contingency Deorbit Preparation Book 3.3-2

Pocket Checklists

Some of the documents in the Off-Nominal section of the FDF contain critical procedures that must be performed within 5 minutes. The three pocket checklists (PCLs) (Ascent/Entry Systems Procedures Book, CDR and PLT Flip Books) and associated cue cards contain these critical data. The PCLs are readily distinguished by the yellow card stock used for the pages. The Ascent PCL contains procedures that safe systems for continued flight. It also contains orbiter systems powerdown procedures.

At the initiation of the post insertion phase, the Orbit PCL is utilized. This PCL contains critical orbiter systems malfunction responses and powerdown procedures.

The Entry PCL contains critical contingency systems malfunction responses that allow safe continuation of the pre-deorbit through early entry phases along with orbiter systems power down procedures. The orbit PCL often refers to the orbiter Malfunction Procedures (MAL) Book for detailed troubleshooting.

Ascent/Entry Systems Procedures Book

The Ascent/Entry Systems Procedures Book does not fly as a standalone document. It is the control source for the CDR and PLT Ascent/Entry Flip Books and Cue Cards. The first nine sections of this document are replications of all the Ascent/Entry Flip Books and Cue Cards. They are added to the front of the MS2's Ascent PCL and again to the Entry PCL (minus the ascent specific pages) to assist MS2 in supporting the CDR/PLT during these critical phases of flight. These pages are printed on white stock to differentiate them from the PCL data.

Systems Abort Once Around Book

The Systems Abort Once Around (SYS AOA) Book contains time-critical steps for the loss of two Freon or water loops precipitating an AOA. Initial steps for the loss of Freon loops or water loops are in the CDR's Flip Book and in the front of the MS2's Ascent PCL. This document also contains deorbit burn monitor procedures, post-burn actions, entry maneuver procedures, and panel configurations.

Malfunction Procedures Book

The MAL Book is a large, two volume document dealing with diagnostic steps used to identify, isolate, and correct orbiter systems malfunctions subsequent to quick response procedures or noncritical system problems. Orbit PCL procedures are duplicated in the MAL book with further troubleshooting steps added. For orbiter malfunctions not covered in the Orbit PCL, the MAL Book is the prime reference. The procedures in the MAL Book are applicable for on-orbit operations only.

In-Flight Maintenance Checklist

The In-Flight Maintenance (IFM) Checklist contains repair/reconfiguration procedures for critical systems, and layouts of orbiter system components. There is also a Standby Supplement available in Mission Control with additional procedures.

Payload Systems Data and Malfunction Procedures Book

The Payload Systems Data and Malfunction Procedures (PL SYS DATA) Book is a flight-specific document that contains both off-nominal procedures and reference information for the mission's payloads to include CRT displays, systems schematics, malfunction diagnostic flow, critical equipment lost with multiplexer/demultiplexer (MDM) failures, and photographs of payloads in the PLB.

Medical Checklist

The Medical (MED) Checklist Generic and Flight Supplement contain emergency medical procedures, medical technique illustrations, equipment/medicine stowage, and medical detailed supplemental objectives (DSO) data. There are three cue cards controlled by the MED Checklist. They provide data for electrocardiogram electrode placement and logging of radiation dosimeter readings.

Contingency EVA Operations Checklist

Included in the Off-Nominal documents are books containing information and procedures for contingency EVA, rendezvous, and deorbit preparation. The Contingency EVA Operations (CONT EVA OPS) Generic Checklist contains the payload bay door contingency EVA summary and detailed timelines and the intravehicular activity (IVA) procedures. The book also contains deorbit prep data (so that deorbit can be accomplished quickly post EVA) and EVA reference data. The Flight Supplement to this document is flown for flight specific payloads incorporating timelines and procedures.

Contingency Rendezvous Book

The Contingency Rendezvous (CONT RNDZ) Book is flown on missions having deployable payloads for which no planned nominal or contingency rendezvous procedure exists. This document contains a summary timeline, integrated procedures for rendezvous and proximity operations, crew aids, and notes. The cue cards controlled by the CONT RNDZ Book provide data for RCS burns, propellant PADS, camera and radar ranging, and proximity operations. There are also rendezvous aid transparencies for the CCTV monitors.

Contingency Deorbit Preparation Book

The Contingency Deorbit Preparation (CONT Deorbit PREP) Book contains procedures and the switch list for emergency deorbit on orbit 2 or 3. It also contains the deorbit procedures used for loss of the flash evaporator, two fuel cells, 2 water loops, or two Freon loops. Although this document has no cue cards, landing site charts and other appropriate data are added to flight copies for crew convenience.